ANEJO 6

TRAZADO Y SUPERESTRUCTURA

ÍNDICE

1. Introducción y objeto 1

2. Normativa de trazado 1

2.1. Marco Normativo 1

2.2. Parámetros de trazado 1

2.2.1. Parámetros de diseño en planta 2

2.2.2. Parámetros de diseño en alzado 3

2.2.3. Entrevía 4

2.2.4. Peralte máximo 4

2.2.5. Insuficiencia de peralte 4

2.2.6. Radio de curvatura mínimo 5

2.2.7. Variación brusca de la insuficiencia de peralte 5

2.3. Criterios de trazado 5

3. Sección transversal 6

3.1. Características de la sección transversal 6

3.1.1. Sección transversal nominal 7

3.1.2. Sección transversal nominal reducida 7

3.1.3. Sección transversal reducida 7

3.1.4. Saneos 7

3.2. Tramificación de la sección transversal 7

4. Condicionantes de diseño 9

4.1. Condicionantes funcionales 9

4.2. Condicionantes físicos/urbanísticos-medioambientales 9

4.3. Criterios geométricos generales 11

4.3.1. Parámetros generales de vía y andén 11

4.3.2. Instalaciones de Seguridad y Comunicaciones 11

5. Descripción de la actuación 12

5.1. Alternativa 1 12

5.2. Alternativa 2 12

5.2.1. Ámbito Canal Sur 12

5.2.2. Ámbito de la Estación 13

5.2.3. Ámbito Canal Norte 14

6. Superestructura 17

6.1. Traviesas y sujeciones 17

6.1.1. Traviesas polivalentes PR con sujeción VE 17

6.1.2. Traviesas tipo AI-VE 18

6.1.3. Traviesas de tres hilos AM-VE 19

6.2. Carril 20

6.3. Aparatos de vía 21

6.3.1. Alternativa 1 21

6.3.2. Alternativa 2 22

Apéndice 1. Justificación de parámetros

Apéndice 2. Listados de trazado

1. Introducción y objeto

El objetivo del trazado realizado para el "Estudio Informativo de la Integración del Ferrocarril en Valladolid" es el de verificar con la profundidad que este tipo de estudios requiere, la factibilidad de una solución geométrica para las vías que, atendiendo a los requerimientos de explotación, cumpla las normativas de trazado vigentes nacionales y europeas y sirva, además, para efectuar las oportunas valoraciones económicas.

El anejo de trazado enuncia las normativas consultadas, describiendo los parámetros usados e incluyéndose, una justificación de su cumplimiento al final del anejo en el apéndice, los cálculos efectuados.

El estudio plantea dos alternativas que se han denominado Alternativa 1 y Alternativa 2. Sustancialmente la diferencia entre ambas estriba en que la Alternativa 1 no se realizan actuaciones que tienen un impacto directo sobre la geometría de vías que hay en la actualidad, planteándose en la Alternativa 2 las modificaciones oportunas para dar una respuesta más óptima desde el punto de vista de la funcionalidad ferroviaria, al nuevo escenario de explotación ferroviaria que se implantará para el horizonte de 2035. Por lo indicado, puesto que la geometría de la alternativa 1 coincide con la geometría actual de las vías, no se incluirán los cálculos justificativos de ésta, mientras que para la alternativa 2, se realizarán estas justificaciones principalmente de las zonas modificadas

2. Normativa de trazado

2.1. Marco Normativo

Las normativas de trazado aplicables y en vigencia en el momento de la redacción del estudio son las siguientes:

- ***N.A.V. 0-2-0.0***, capítulo 3, Parámetros geométricos en mejora de líneas actuales por obras (renovaciones y rehabilitaciones de vía). Normativa aplicable al ancho de vía 1.668 mm.
- ***I.G.P. 2.011***, Instrucciones y recomendaciones para redacción de proyectos de plataforma. IGP-3, Instrucciones y recomendaciones sobre trazado. Normativa aplicable al ancho de vía 1.435 mm.
- ***Especificaciones Técnicas de Interoperabilidad (ETI) del subsistema infraestructura*** (Reglamento (UE) n °1299/2014). Normativa aplicable a todos los anchos y vías objeto del estudio.

En los apartados posteriores se detallan los parámetros de diseño considerados y recogidos en ambas normas. Cuando sobre un mismo parámetro las normas discrepen se tomará aquel que sea más restrictivo o limitante.

Al final del anejo, en el apéndice 1, se incluyen los cuadros de justificación de parámetros.

Durante la redacción del presente Estudio Informativo ADIF ha aprobado la nueva N.A.P. 1-2-1.0 "Norma ADIF Plataforma. Metodología para el Diseño del Trazado Ferroviario" (1º Edifición. Enero 2021).

A tenor del punto 7. Disposiciones Transitorias y Entrada en Vigor se establece lo siguiente:

7.- DISPOSICIONES TRANSITORIAS Y ENTRADA EN VIGOR

La presente NAP entrará en vigor en la fecha de su aprobación.

Será de aplicación a todos los proyectos cuya redacción se inicie a partir de ese momento, entendiendo por inicio de la redacción del proyecto, bien la firma del contrato para su redacción, cuando se trate de medios ajenos a Adif, o bien el inicio de la redacción del proyecto, cuando se trate de medios propios. También será de aplicación a las obras que deriven de proyectos a los que aplique esta norma.

La presente NAP podrá utilizarse en el resto de proyectos que, por encontrarse ya en desarrollo, así se decida.

Dado que el presente Estudio Informativo se encontraba en fase de finalización y edición, no aplica esta actualización normativa.

2.2. Parámetros de trazado

Se describen seguidamente los parámetros de trazado aplicables al diseño de la planta que las normas aplicadas contemplan.

2.2.1. Parámetros de diseño en planta

2.2.1.1. Ancho 1.668 mm

La normativa ***N.R.V. 0-2-0.0,*** en el apartado ***"Parámetros geométricos en mejora de líneas actuales por obras (renovaciones y rehabilitaciones de vía)"*** establece los siguientes valores límite cuando la velocidad de diseño es inferior a 140 km/h:

- Peralte: 160 mm (límite excepcional 160 mm)
- Insuficiencia de peralte: 115 mm (límite excepcional 115 mm)
- Exceso de peralte: 80 mm (límite excepcional 110 mm)
- Aceleración no compensada: 0,65 m/s² (límite excepcional 0,65 m/s²)
- Rampa de peralte: 1,15 mm/m (límite excepcional 1,15 mm/m)
- Variación del peralte con el tiempo: 45 mm/s (límite excepcional 45 mm/s)
- Variación de la insuficiencia de peralte con el tiempo: 35 mm/s (límite excepcional 35 mm/s)
- Variación de la aceleración no compensada: 0,20 m/s³ (límite excepcional 0,20 m/s³)

Para el rango de velocidad comprendido entre 140 y 160 km/h los parámetros son estos otros:

- Peralte: 160 mm (límite excepcional 160 mm)
- Insuficiencia de peralte: 115 mm (límite excepcional 115 mm)
- Exceso de peralte: 80 mm (límite excepcional 110 mm)
- Aceleración no compensada: 0,65 m/s² (límite excepcional 0,65 m/s²)
- Rampa de peralte: 1,0 mm/m (límite excepcional 1,0 mm/m)
- Variación del peralte con el tiempo: 45 mm/s (límite excepcional 45 mm/s)
- Variación de la insuficiencia de peralte con el tiempo: 35 mm/s (límite excepcional 35 mm/s)
- Variación de la aceleración no compensada: 0,20 m/s³ (límite excepcional 0,20 m/s³)

2.2.1.2. Ancho 1.435 mm

La normativa ***I.G.P. 2.011,*** establece los siguientes valores límite cuando la velocidad de diseño es inferior a 140 km/h:

- Peralte: 140 mm (límite excepcional 160 mm)
- Insuficiencia de peralte: 100 mm (límite excepcional 130 mm)
- Exceso de peralte: 80 mm (límite excepcional 100 mm)
- Aceleración no compensada: 0,65 m/s² (límite excepcional 0,85 m/s²)
- Rampa de peralte: 0,8 mm/m (límite excepcional 2 mm/m)
- Variación del peralte con el tiempo: 30 mm/s (límite excepcional 50 mm/s)
- Variación de la insuficiencia de peralte con el tiempo: 30 mm/s (límite excepcional 55 mm/s)
- Variación de la aceleración no compensada: 0,20 m/s³ (límite excepcional 0,36 m/s³)

Para el rango de velocidad comprendido entre 140 y 200 km/h los parámetros son estos otros:

- Peralte: 140 mm (límite excepcional 160 mm)
- Insuficiencia de peralte: 100 mm (límite excepcional 150 mm)
- Exceso de peralte: 80 mm (límite excepcional 100 mm)
- Aceleración no compensada: 0,65 m/s² (límite excepcional 0,98 m/s²)
- Rampa de peralte: 0,8 mm/m (límite excepcional 1,0 mm/m)
- Variación del peralte con el tiempo: 30 mm/s (límite excepcional 50 mm/s)
- Variación de la insuficiencia de peralte con el tiempo: 30 mm/s (límite excepcional 55 mm/s)
- Variación de la aceleración no compensada: 0,20 m/s³ (límite excepcional 0,36 m/s³)

2.2.2. Parámetros de diseño en alzado

Se describen seguidamente los parámetros de trazado aplicables al diseño de la rasante que las normas aplicadas contemplan.

2.2.2.1. Pendiente en vía general

Para la norma I.G.P. 2.011 la pendiente en vía general tendrá las siguientes limitaciones:

- Tráfico de viajeros: 25 mm/m (límite excepcional 30 mm/m)
- Tráfico de mercancías: 12,5 mm/m (límite excepcional 15 mm/m)

Para la norma ETI Infraestructura, en la fase de diseño, se permiten gradientes de hasta 35 mm/m para las vías generales en líneas nuevas P1 dedicadas al tráfico de pasajeros siempre que se respeten las condiciones globales siguientes: la rampa del perfil medio móvil en 10 km deberá ser inferior o igual a 25 mm/m y la longitud máxima en rampa o pendiente continua de 35 mm/m no deberá superar los 6 km.

La norma N.A.V aplicada en el estudio al ancho 1.668 mm, en el capítulo 3, para mejora de líneas actuales, no indica pendientes a considerar por entenderse que la actuación se lleva a cabo en un corredor ferroviario existente y que por tanto las pendientes adoptadas o resultantes serán las mismas que hay en la actualidad o si acaso del mismo orden de magnitud. No obstante, se considera que la pendiente límite normal y excepcional sea de 20 mm/m para velocidades inferiores a 140 km/h y de 15 y 20 mm/m, límite normal y excepcional respectivamente, para velocidades comprendidas entre 140 y 160 km/h. Estas pendientes son las recogidas en el capítulo 1 de la normativa N.A.V. 0-2-0.0 aplicable a líneas nuevas.

2.2.2.2. Pendiente en vías de apartado o de estación

En el diseño de la rasante en la estación de Valladolid – Campo Grande y Tres Hermanos se tiene en consideración la norma I.G.P. 2.011, que para apartaderos o estaciones establece una pendiente normal de 2 mm/m y una excepcional del 2,5 mm/m.

También se tiene en consideración la norma ETI Infraestructura en su apartado 4.2.3.3, que refleja lo siguiente:

- Los gradientes de las vías que pasen a través de andenes de viajeros de líneas nuevas no superarán los 2,5 mm/m, siempre que se enganchen o desenganchen vehículos de forma habitual.
- Los gradientes para vías nuevas de estacionamiento destinadas a estacionar material rodante no serán superiores a 2,5 mm/m a menos que se establezcan las disposiciones concretas que impidan que se desplace.

El capítulo 3 de la norma N.A.V. 0-2-0.0 no hace referencia a pendientes mínimas en estación o apartaderos, nuevamente porque este capítulo se aplica a modificaciones de vías existentes y considera por lo tanto que las pendientes resultantes deben ser parejas a las actuales. Por este motivo se alude al capítulo 1 de la citada norma, donde para vías nuevas en estación se establece una pendiente máxima de 2,5 mm/m.

2.2.2.3. Acuerdos verticales

La curvatura vertical mínima que establece el capítulo 3 de la N.A.V. 0-2-0.0 es de 2.000 m para acuerdos cóncavos y 3.000 para convexos.

Por su parte, la norma ETI Infraestructura en el apartado 4.2.3.5, indica que el radio mínimo de los acuerdos verticales será al menos de 500 m en los acuerdos convexos o de 900 m en los acuerdos cóncavos.

La norma I.G.P. 2.011 no establece radios mínimos de curvatura vertical.

2.2.2.4. Aceleración vertical

La normativa I.G.P. 2.011 establece que en los acuerdos verticales la aceleración vertical función de la velocidad sea como límite normal 0,22 m/s² y como límite excepcional 0,31 m/s², tanto para las velocidades inferiores a 140 km/h, como para las comprendidas entre 140 y 200 km/h.

La normativa N.A.V en su capítulo 3, establece como límite normal 0,30 m/s² y como límite excepcional 0,45 m/s² para las velocidades inferiores a 140 km/h y las comprendidas entre 140 y 160 km/h.

A este respecto, la normativa ETI Infraestructura no establece indicaciones.

2.2.2.5. Longitud mínima de acuerdo vertical y rasante

La normativa I.G.P. 2.011 establece que las alineaciones del perfil longitudinal deben contar con una mínima longitud, siendo V/3 el límite normal y V/4 el límite excepcional, tanto para velocidades inferiores a 140 km/h como para el rango de velocidades comprendido entre 140 y 200 km/h.

Por su parte la norma N.A.V. 0-2-0.0 en su capítulo 3 establece que la longitud mínima de alineación sea 0,5xV como límite normal y 0,4xV como límite excepcional, tanto para las velocidades inferiores a 140 km/h como para las comprendidas entre 140 y 160 km/h.

Al respecto la normativa ETI Infraestructura no establece indicaciones.

2.2.3. Entrevía

Según la ETI Infraestructura en su apartado 4.2.3.2 la distancia horizontal mínima nominal entre ejes próximos se especificará para el diseño y no será inferior a los valores siguientes:

- 160 < V ≤ 200: 3,92 m
- 200 < V ≤ 250: 4,0 m
- 250 < V ≤ 300: 4,3 m
- V > 300: 4,5 m

2.2.4. Peralte máximo

Además de los peraltes señalados anteriormente y recogidos en las normas N.A.V. y en la I.G.P., se atiende a los dispuesto en la ETI Infraestructura en su apartado 4.2.4.2, donde se indica que el peralte de diseño en vía general para líneas de ancho 1.435 mm tendrá la siguiente limitación:

VIA	TRAFICO	
	MERCANCIAS Y MIXTO	PASAJEROS
CON BALASTO	160 mm	180 mm
SIN BALASTO	170 mm	180 mm

El peralte de diseño en las vías adyacentes a andenes de estación donde los trenes vayan a parar en servicio normal no superara los 110 mm.

Y para vías de ancho 1.668 mm en lugar de lo anterior se establece un límite de 180 mm. Por su parte, el peralte de diseño aplicable a las vías adyacentes a andenes de estación donde los trenes vayan a parar en servicio normal no superara los 125 mm.

2.2.5. Insuficiencia de peralte

Además de lo indicado al respecto de la insuficiencia de peralte en el apartado donde se detallan los parámetros de trazado de las normas N.A.V e I.G.P, según la ETI Infraestructura en su apartado 4.2.4.3. los valores máximos aplicables al ancho 1.435 mm cumplirán además lo siguiente:

- Para la explotación de material rodante conforme a la ETI sobre locomotoras y pasajeros:
  - V ≤ 160 km/h: 153 mm
  - 160 < V < 300 km/h: 153 mm
  - V > 300 km/h: 100 mm
- Para la explotación de material rodante conforme a la ETI sobre vagones de mercancías:
  - V ≤ 160 km/h: 130 mm

Para el ancho 1.668 mm cumplirán con lo siguiente:

- Para la explotación de material rodante conforme a la ETI sobre locomotoras y pasajeros:
  - V ≤ 160 km/h: 175 mm
  - 160 < V < 300 km/h: 175 mm
  - V > 300 km/h: 115 mm
- Para la explotación de material rodante conforme a la ETI sobre vagones de mercancías:
  - V ≤ 160 km/h: 150 mm

2.2.6. Radio de curvatura mínimo

Según la norma ***ETI Infraestructura*** en su apartado 4.2.3.4. el radio mínimo de las alineaciones circulares se seleccionará teniendo en cuenta la velocidad local de diseño de la curva, siendo para líneas nuevas no inferior a 150 m. Las contracurvas con radios comprendidos entre 150 y 300 m se proyectarán con alineaciones intermedias para evitar el encaballamiento o bloqueo de los topes del material móvil. No será necesario disponer un tramo de vía recta intermedia cuando el radio de ambas curvas sea mayor o igual a 220 m. Los radios generalmente se acompañan de clotoides simétricas de transición entre recta y curva.

2.2.7. Variación brusca de la insuficiencia de peralte

La normativa ETI Infraestructura establece para las vías de ancho 1.668 mm las siguientes limitaciones:

- V ≤ 115 km/h: 110 mm
- 115 < V ≤ 220 km/h: (399-Vmax)/2,6 [mm]
- 220 < V ≤ 230 km/h: 70 mm

Para las vías con ancho 1.435 mm establece estas otras limitaciones:

- V ≤ 60 km/h: 130 mm
- 60 < V ≤ 200 km/h: 125 mm
- 200 < V ≤ 230 km/h: 85 mm
- V > 230 km/h: 25 mm

Las normativas I.G.P. 2.011 y N.A.V. 0-2-0.0 no establecen limitación a este parámetro.

2.3. Criterios de trazado

Se indican a continuación unas pautas o directrices a seguir, que afectan directamente a la definición del trazado.

ANCHO DE VÍA

Las normativas de trazado se aplicarán a vías de ancho estándar europeo (1.435 mm) y ancho convencional (1.668 mm) por ser estos anchos los participantes en el estudio. También habrá vías que compartan ambos anchos (ancho mixto).

TIPO DE TRAFICO

El corredor ferroviario analizado va a ser operado exclusivamente por tráfico de viajeros, como consecuencia del cambio de explotación ferroviaria que se dará en 2035, ya que los tráficos de mercancías no pasarán por el ámbito del estudio informativo, por ser derivados por la variante de mercancías.

POSICIÓN DEL EJE DE TRAZADO EN LA SECCIÓN TRANSVERSAL

La posición del eje de trazado en la sección transversal está condicionada por el número de vías, el ancho de vía, el entreeje y el peralte.

Para las vías únicas la posición del eje de trazado está referida, en planta, al eje de la vía y para el alzado, la cota del eje corresponde a la del hilo bajo. Todos los ejes representando en el presente Estudio Informativo son de vía única.

CRITERIO DE UTILIZACION DE VALORES LÍMITE DE PARÁMETROS

El valor límite indicado en las normas, es un valor de diseño que no se ha de sobrepasar. Estos valores garantizan que los costes de mantenimiento de la vía se mantengan a un nivel razonable, sin comprometer el confort de los viajeros. Idealmente, los valores de diseño adoptados deberán contar con márgenes significativos con respecto a los límites. Algunas normas establecen, para ciertos parámetros, límites excepcionales, los cuales sólo se pueden emplear en circunstancias excepcionales debidamente justificadas, ya que pueden requerir un régimen de mantenimiento específico.

CRITERIO DE COLOCACIÓN DE APARATOS DE VÍA

Se situarán en tramos con alineación recta y pendiente constante y, por tanto, en tramos sin peraltar. Se tendrá en consideración que la tangencia de las curvaturas no coincida con los talones del desvío, debiéndose dejar un resguardo para implantar las traviesas comunes a vías directa y desviada en tramo recto.

CRITERIO DE VELOCIDADES

Las velocidades máximas objetivo para el cálculo de parámetros son las que, por ámbitos, se señalan a continuación:

- Ámbito canal sur: 160 km/h para los anchos 1.668 y 1.435 mm
- Ámbito estación de Valladolid – Campo Grande: 50 km/h para el ancho 1.668 mm y 80 km/h para el ancho 1.435 mm
- Ámbito canal norte:160 km/h para los anchos 1.668 y 1.435 mm

RADIOS DE GRAN ENVERGADURA

Los ámbitos de los canales sur y norte tienen una acentuada geometría rectilínea que se extiende por varios kilómetros de longitud. Esta situación conlleva que los trazados de las vías dentro de estos ámbitos intercalen curvaturas de gran tamaño para aplicar ligeros giros a la traza, absorbiendo de esta manera los pequeños y sutiles cambios de azimut que reflejan las vías en la cartografía o topografía empleada. Estos radios por su envergadura no requieren peralte, ni tampoco clotoides de transición, si bien en algún caso se han dispuesto por considerar que su presencia era conveniente para fidelizar de mejor manera la vía o bien por paralelismos con la vía adyacente. Al no haber peralte ni tampoco clotoides se vigila la variación brusca de la insuficiencia de peralte y se comprueba que cumple con las especificaciones técnicas de interoperabilidad.

3. Sección transversal

En el diseño de las vías de la Alternativa 2 se han considerado las características de la plataforma ferroviaria, capas de asiento y taludes a implantar, a efectos de determinar el grado de afección e integración de la infraestructura en el medio en el que se ubica, cuantificar los volúmenes de tierras a aportar y a vertedero, así como las superficies de los taludes.

Desde el punto de vista de la sección transversal, la actuación del Estudio Informativo contempla tres situaciones diferenciadas: tramos con plataforma nueva, tramos de renovación y tramos sin actuación.

La plataforma nueva se aplica en aquellas zonas donde el eje se posiciona fuera de zonas donde previamente hubiera plataforma y por tanto requiere de la misma. Los tramos de renovación son aquellos que no requieren plataforma nueva y la actuación se centra en renovar únicamente la capa de balasto. Por último, los tramos sin actuación desde el punto de vista de la sección transversal son aquellos en los que, por los motivos que fuese, se aprovecha la actual plataforma y tampoco se renueva la capa de balasto. Cabe destacar que la sección transversal que se describe en adelante se aplica a aquellos tramos de actuación que se centran en el ámbito de la estación de Valladolid – Campo Grande y del canal norte, no siendo de aplicación en el canal sur.

3.1. Características de la sección transversal

La sección transversal que se utiliza en el diseño de la plataforma es la reflejada en la normativa ***I.G.P. 2.011***, ***Instrucciones y recomendaciones para redacción de proyectos de plataforma,*** apartado ***I.G.P.-3.2 Secciones tipo.*** Se aplica la misma sección transversal a las vías de ancho 1.435 y 1.668 mm. Se muestra a continuación la misma:

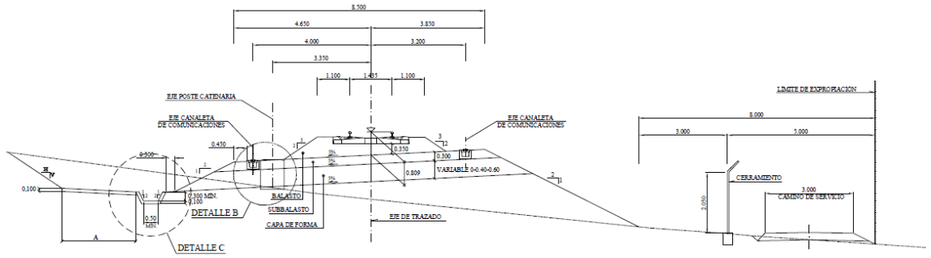

A causa de las restricciones de espacio y para minimizar afecciones, se aplican modificaciones a los valores nominales de sección transversal, aplicando los valores más conservadores que se detallan en los siguientes apartados.

3.1.1. Sección transversal nominal

Esta sección aplicada al Estudio Informativo se corresponde con la nominal recogida en la I.G.P. 2.011, enunciada en el apartado anterior. Sus características son las siguientes:

- Capa de balasto: 0,35 m
- Capa de subbalasto: 0,3 m
- Capa de forma: 0,5 m
- Hombro de balasto: 1,1 m
- Talud de balasto: 3H/2V
- Pendiente transversal capas de asiento: 5 % (a un agua)
- Distancia horizontal de eje de vía a poste de catenaria: 3,35 m
- Distancia horizontal de eje de vía a eje de canaleta: 4,00 m
- Ancho total de la plataforma: 8,5 m (medidos entre hombro de subbalasto) que se reparten asimétricamente a los lados derecho e izquierdo, con 4,65 m y 3,85 m respectivamente.
- Talud de desmonte: 3H/2V
- Talud de terraplén: 2H/1V

3.1.2. Sección transversal nominal reducida

Para aquellos puntos o tramos de trazado donde la integración de la sección nominal no es posible, se recurre a reducir el ancho total de la plataforma a 7,7 m de manera que la distancia horizontal desde el eje al hombro del subbalasto sea en ambos lados, derecho e izquierdo, de 3,85 m. Las demás características son iguales a la sección nominal por lo que lo expuesto en el punto anterior sigue siendo válido.

3.1.3. Sección transversal reducida

Para los puntos del trazado donde la sección nominal reducida anteriormente explicada no es aplicable, se reduce el ancho total de la plataforma hasta los 7 m, de manera que la distancia horizontal desde el eje al hombro del subbalasto sea en ambos lados, derecho e izquierdo, de 3,5 m. Esta distancia es superior a los 3,35 m que se determinan en la sección nominal de la I.G.P. 2.011 entre el eje de la vía y la posición del eje del poste de la catenaria, siendo factible, por lo tanto, integrar el mismo.

3.1.4. Saneos

En determinados ámbitos e intervalos de la actuación es preciso intercalar una capa de saneo entre las capas de asiento de la plataforma y el terreno natural. La capa de saneo tiene un espesor de 0,7 m para las zonas donde hay que aplicarla en la estación y de 0,5 m para el resto de los ámbitos.

3.2. Tramificación de la sección transversal

Como resultado de aplicar lo expuesto anteriormente resulta la tramificación de plataforma, cuyas características se resumen en el siguiente cuadro.

ÁMBITO	ANCHO	VÍA	PPKK		LONGITUD (m)	ACTUACIÓN	ANCHO PLATAFORMA	BALASTO (m)	SUBBALASTO (m)	CAPA FORMA (m)	SANEO (m)
			INICIAL	FINAL							
ESTACIÓN	1.668 mm	VIA 8 Eje 69	0+000,000	0+220,000	220,000	Plataforma nueva	Reducida 3,5 m	0,35	0,3	0,5	0,7
			0+220,000	0+515,000	295,000	No		No	No	No	No
			0+515,000	0+789,308	274,308	Plataforma nueva	Reducida 3,5 m	0,35	0,3	0,5	0,7
		MANGO SUR Eje 100	0+000,000	0+138,173	138,173	No		No	No	No	No
		VIA 7 Eje 71	0+000,000	0+481,152	481,152	No		No	No	No	No
			0+481,152	0+722,667	241,515	Plataforma nueva	Limita con vías adjuntas/Andenes	0,35	0,3	0,5	0,7
		VIA 1E Eje 36	0+000,000	0+038,000	38,000	No		No	No	No	No
			0+038,000	0+213,115	175,115	Plataforma nueva	Limita con vías adjuntas/Andenes	0,35	0,3	0,5	0,7
		VIA 2E Eje 17	0+000,000	0+193,797	193,797	Plataforma nueva	Limita con vías adjuntas/Andenes	0,35	0,3	0,5	0,7
		VIA 6 Eje 77	248+326,485	248+966,701	640,216	No		No	No	No	No
			248+966,701	249+404,800	438,099	Plataforma nueva	Limita con vías adjuntas/Andenes	0,35	0,3	0,5	0,7
	1.435 mm	VIA 4 Eje 35	0+000,000	0+913,629	913,629	Renovación	Limita con vías adjuntas/Andenes	0,35	No	No	No
		VIA 5 Eje 38	0+000,000	0+772,753	772,753	Renovación	Limita con vías adjuntas/Andenes	0,35	No	No	No
CANAL NORTE	1.668 mm	VIA 6 Eje 77	249+404,800	254+000,000	4.595,200	No		No	No	No	No
			254+000,000	256+234,000	2.234,000	Plataforma nueva	IGP 4,65 m	0,35	0,3	0,5	0,5
			256+234,000	257+092,062	858,062	Renovación	Limita con vías adjuntas	0,35	0,3	No	No
		VIA 8 TRES HERMANOS Eje 78	0+000,000	0+577,216	577,216	No		No	No	No	No
		VIA 10 TRES HERMANOS Eje 83	0+000,000	0+748,311	748,311	No		No	No	No	No
	1.435 mm	VIA 2 Eje 2	180+286,000	181+060,000	774,000	Plataforma nueva	Reducida 3,2 m (IGP distancia a poste)	0,35	0,3	0,5	0,5
			181+060,000	181+096,000	36,000	Viaducto Río Esgueva		0,45	No	No	No
			181+096,000	181+207,395	111,395	Plataforma nueva	IGP 3,85 m	0,35	0,3	0,5	0,5
			181+207,395	181+247,079	39,684	P.I. Rafael Cano		0,45	No	No	No
			181+247,079	182+404,626	1.157,547	Plataforma nueva	IGP 3,85 m	0,35	0,3	0,5	0,5
			182+404,626	184+454,000	2.049,374	Plataforma nueva	IGP 4,65 m	0,35	0,3	0,5	0,5
			184+454,000	187+757,821	3.303,821	No		No	No	No	No

4. Condicionantes de diseño

El Estudio Informativo que nos ocupa ha sido redactado siguiendo una serie de condicionantes de distinto índole:

- Condicionantes funcionales
- Condicionantes físicos/urbanísticos-medioambientales
- Condicionantes geométricos generales

4.1. Condicionantes funcionales

El escenario temporal analizado en el presente Estudio contempla el desvío ferroviario de los servicios de mercancías por la Variante Este, infraestructura actualmente en ejecución. Es por ello que todos los tráficos que acceden al corredor que atraviesa Valladolid de norte a sur van a ser exclusivamente de viajeros.

Se ha definido 2035 como horizonte temporal a analizar, fecha en la cual se habrá generado el trasvase de servicios ferroviarios operados actualmente en ancho convencional a ancho estándar gracias a la puesta en servicio de nuevos corredores de Alta Velocidad hacia la cornisa cantábrica, recogido en el PITVI 2012-2024.

4.2. Condicionantes físicos/urbanísticos-medioambientales

Desde la puesta en servicio del primer ferrocarril en Valladolid a mediados del siglo XIX la ciudad ha ido desarrollándose a lo largo del mismo.

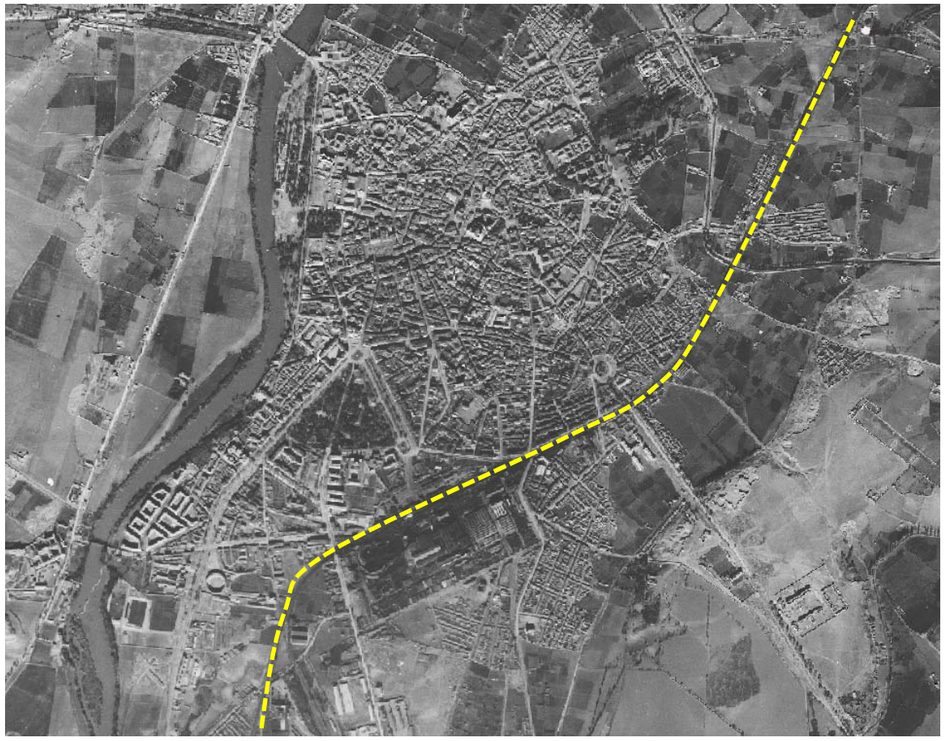

Tal y como se puede observar en la imagen del Vuelo Americano 1945-1946 Serie-A disponible en la Fototeca Digital del I.G.N. la traza ferroviaria marcaba el límite de la ciudad en numerosas zonas.

El éxodo rural entre las décadas de los 60 y 70 provoca un aumento exponencial de la población en la capital vallisoletana hasta llegar a duplicarla, tal y como viene reflejado en la siguiente gráfica con los datos del I.N.E.

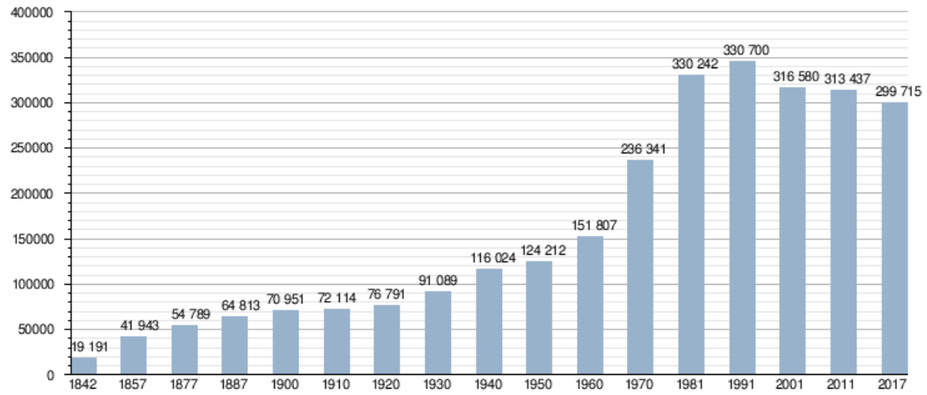

Gráfico: Wikipedia

En la siguiente imagen del año 1981 incluida en la Fototeca Digital del I.G.N. se observa la expansión de la ciudad al otro lado de las vías.

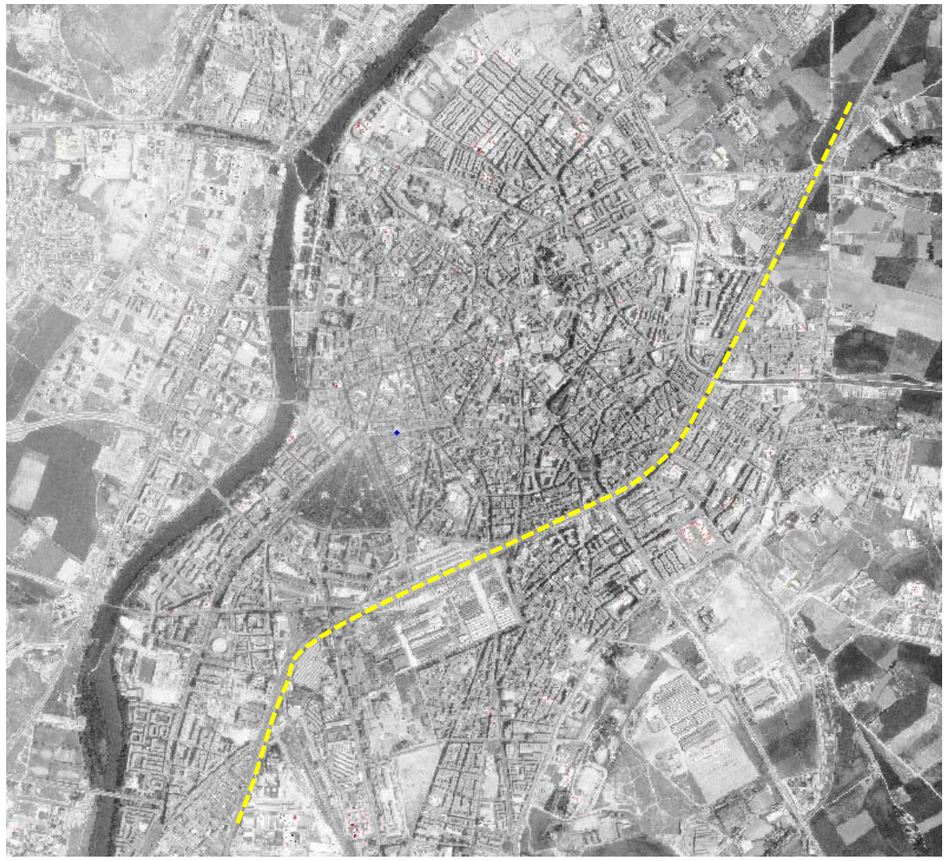

La necesidad de conectar ambas márgenes de la vía lleva a la Administración a desarrollar una serie de pasos transversales de una tipología aceptable para la época que permiten garantizar una fluidez en la movilidad de la ciudad.

Los nuevos estándares de seguridad introducidos por la llegada a la ciudad de la Alta Velocidad sumado al paso del tiempo de estos pasos peatonales, principalmente pasos inferiores, da como resultado la necesidad de adoptar una estrategia global que permita garantizar la permeabilidad transversal adaptándola a las nuevas necesidades.

En 2017, fruto de un acuerdo interinstitucional entre la Junta de Castilla y León, el Ayuntamiento de Valladolid, ADIF, ADIF Alta Velocidad, Renfe y la propia Sociedad Valladolid Alta Velocidad se subscribe un Convenio para el desarrollo de las obras derivadas de la transformación de la Red Arterial Ferroviaria de Valladolid, sustituyendo a convenios firmados previamente.

En este convenio se recogen una serie de actuaciones de permeabilidad urbana manteniendo el ferrocarril en superficie dentro del corredor actual.

En cuanto a los elementos de la traza más destacados se debe poner en valor el Arco de Ladrillo, estructura ornamental situada en la cabecera sur de la estación.

En la cabecera norte, en el apeadero de Valladolid Universidad situado en el PK 251+600 de la línea Madrid-Hendaya se debe tener en cuenta que con motivo de la puesta en servicio de la Alta Velocidad Valladolid – Palencia – León el andén 1 no presta servicio.

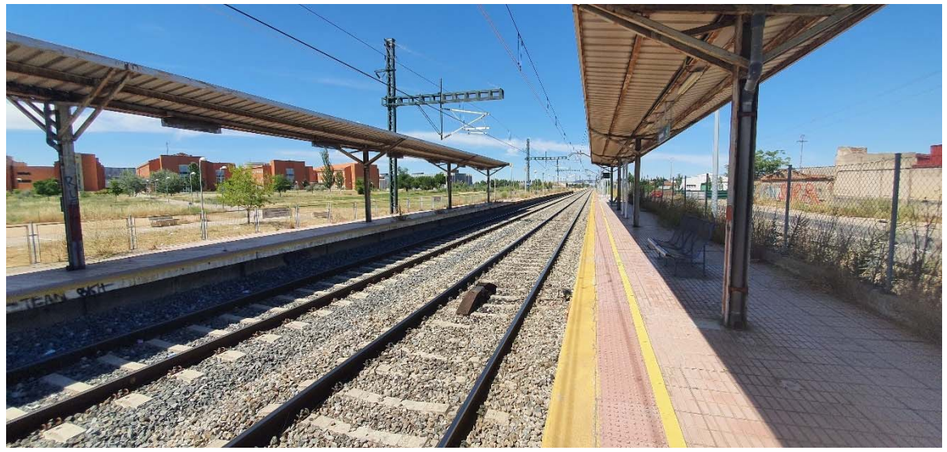

Por último, y en cuanto a criterios medioambientales se refiere el trazado cruza sobre el río Esgueva, afluente del río Pisuerga.

4.3. Criterios geométricos generales

El corredor ferroviario actual queda definido por la propia inserción en la trama urbana, como se ha definido en el apartado anterior. La normativa de trazado ha sido expuesta en el apartado número 2.

En este apartado se definen los requerimientos geométricos específicos para el encaje de vías de la estación a partir de las necesidades funcionales determinadas en el anejo “Análisis Funcional”.

4.3.1. Parámetros generales de vía y andén

A continuación, se definen los principales parámetros generales de vía y andén.

- Radio interoperable del andén (mayor o igual de 300 metros)
- Anchura mínima de andén cumpliendo normativa vigente. Aunque el ancho no tiene que ser el mismo en toda su longitud, es recomendable en andenes que dan servicio a dos vías un ancho de 9 metros como mínimo, ampliándose si fuera necesario por los diferentes criterios citados para lograr la correcta integración en los mismos, principalmente de estructura y elementos de comunicación y/o evacuación.
- Para las toperas de altas prestaciones han de considerarse 7 metros de longitud y se ha de evitar embeberse en andén.
- Por lo que aparatos se refiere, se debe evitar en la medida de lo posible la elección de aparatos cuyo coste de mantenimiento es elevado
- La separación entre aparatos de vía está condicionada por la distancia mínima entre soldaduras especificada en la norma NAV 3-3-2.1., donde para longitudes menores a 6 metros en tramos con velocidad igual o menor a 160 km/h viene fijada el tipo de soldadura a realizar.

4.3.2. Instalaciones de Seguridad y Comunicaciones

Entre extremo de andén y el piquete de vía de los desvíos debe mantenerse la distancia requerida por el sistema de señalización ERTMS, cuyo mínimo debe ser de 35 m (5 m entre piquete y circuito de vía, 10 m de circuito de vía a partir del piquete, señal, 15 m de balizas, y 5 m entre cabeza de tren y última baliza).

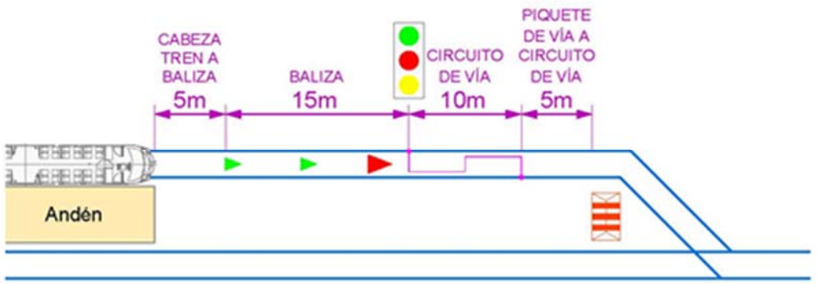

5. Descripción de la actuación

El trazado definido en el presente Estudio se ha tramificado en distintos ámbitos, claramente diferenciados por la estación como ámbito central, unido a las cabeceras de acceso tanto por el norte como por el sur de la terminal ferroviaria. A su vez, cada alternativa distingue las actuaciones en función del ancho de vía designado.

El alcance de cada uno de los ámbitos se determina de la siguiente manera:

- El canal sur fija el inicio a la altura del paso superior sobre la VA-30 y se extiende hasta la curva de entrada a la estación.
- El ámbito de la estación comprende todos los aparatos de acceso a la estación, así como las distintas configuraciones de vía prevista en la propia estación.
- El canal norte da comienzo pasado el último aparato de la estación finalizando en el Nudo Norte ferroviario, zona donde se bifurcan los corredores en ancho ibérico y estándar.

El Estudio consta de 2 alternativas, las cuales se definen a continuación:

5.1. Alternativa 1

A nivel de trazado la alternativa 1 queda definida como el corredor ferroviario existente en la actualidad.

Este da comienzo en las siguientes coordenadas:

ALTERNATIVA 1	VIA	ANCHO	PPKK	COORDENADAS		COTA (mm)	PENDIENTE (mm/m)
				X	Y		
REPLANTEO INICIO	2	UIC	174+876,679	354.437,426	4.607.545,024	691,848	-5,43
	1	UIC	174+874,848	354.443,502	4.607.543,007	691,849	-4,60
	4	IB	244+217,757	354.447,172	4.607.541,789	691,849	-4,60

Y su finalización se plantea en las siguientes coordenadas:

ALTERNATIVA 1	VIA	ANCHO	PPKK	COORDENADAS		COTA (mm)	PENDIENTE (mm/m)
				X	Y		
REPLANTEO FINAL	1	UIC	187+756,310	360.754,435	4.618.335,183	699,093	14,77
	2	UIC	0+189,876	360.758,872	4.618.332,557	699,095	14,78
	5	IB	8+618,803	360.762,599	4.618.319,558	699,603	1,52

Tal y como se ha comentado en otros anejos, a diferencia de la Alternativa 0, si bien la actuación no implica una actuación constructiva tanto en la superestructura, electrificación, instalaciones o en la propia estación, la variación sustancial de los tráficos, recogidos en el Estudio Funcional, permite considerar ésta como una alternativa independiente.

5.2. Alternativa 2

5.2.1. Ámbito Canal Sur

5.2.1.1. Ancho estándar

Al igual que en la alternativa 1, el corredor de la cabecera sur se encuentra finalizado con la reciente puesta en servicio de la duplicación de vía en ancho estándar.

ALTERNATIVA 2	VIA	ANCHO	PPKK	COORDENADAS		COTA (m)	PENDIENTE (mm/m)
				X	Y		
REPLANTEO INICIO	2	UIC	174+876,679	354.437,426	4.607.545,024	691,848	-4,60
	1	UIC	174+874,848	354.443,502	4.607.543,007	691,849	-4,60

El tramo destaca por pendientes muy reducidas (máxima de 3,52‰) y radios amplios que permiten alcanzar los 150-160km/h en el tramo, atendiendo al Cuadro Máximo de Velocidades.

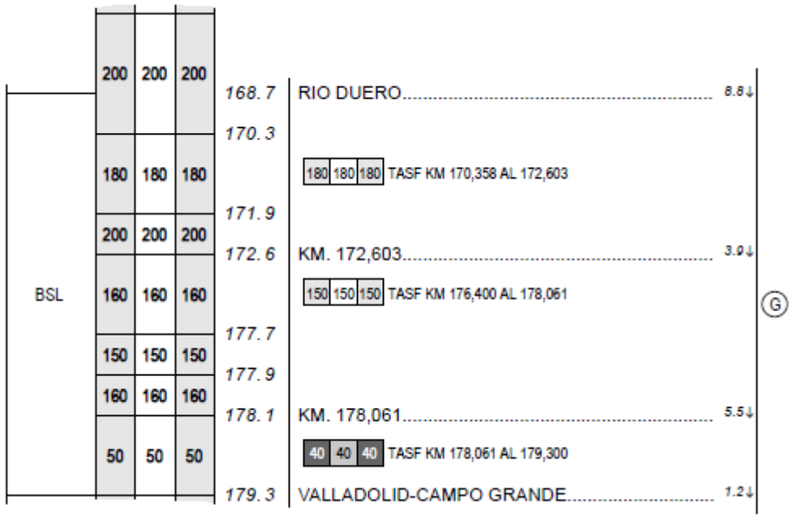

5.2.1.2. Ancho ibérico

El dominio ferroviario consensuado en el seno de la Sociedad Valladolid Alta Velocidad modifica el cerramiento actual de tal forma que se desmantela la vía actual de acceso a las instalaciones de Argales y Redalsa. Esta actuación no es objeto del presente Estudio Informativo.

Es por ello que no se consideran actuaciones de vía en este tramo.

5.2.2. Ámbito de la Estación

5.2.2.1. Ancho estándar

La previsión de una migración de tráficos de ancho ibérico a ancho estándar propicia la remodelación de la playa de vías en ancho estándar. Si bien en la actualidad la explotación de la Alta Velocidad se gestiona con 3 vías, el aumento de tráficos con destino el norte de España, así como el incremento de servicios de Media Distancia con Valladolid como estación término hacen necesario su ampliación hasta las 5 vías.

El acceso a la estación por la cabecera sur la componen 2 escapes de tipología DSIH-G-60-500-0.09-CC-TC-D/I que permiten velocidades de 200/60. La curva a derechas de radio 483m. hasta el Arco de Ladrillo enlaza con la recta de entrada a la estación.

La playa de vías va aumentando mediante la colocación de distintos aparatos cuyas tipologías se exponen en el apartado *5.3 Aparatos de vía* del presente anejo.

Las vías generales, vías 1 y 2, más próximas a la estación mantienen su geometría actual. No obstante, con motivo de optimizar la sectorización de las vías, se plantea el desplazamiento de la bretelle existente.

Con el fin de garantizar la interoperabilidad, la pendiente máxima en zona de andenes no supera las 2‰.

El diseño de las vías 3, 4 y 5 ha buscado la optimización de la funcionalidad, situando los aparatos de modo que se permitan dobles encaminamientos. Este aspecto se desarrolla con más profundidad en el Anejo de Funcionalidad.

Por lo que a la geometría se refiere, al igual que las vías 1 y 2, y de acuerdo con la normativa de interoperabilidad, en zona de andén los radios superan los 500 metros. Al igual que en las vías 1 y 2 y con el fin de sectorizar los andenes se proyecta una bretelle DDIL-G-60-318-0,09-CR-4000, permitiendo maniobras a 30km/h entre vías.

La salida de estas tres vías por el corredor norte cuenta con radios más pequeños, adaptándose a la zona. Es por ello que la vía 4 cuenta con un radio de 260 metros, apto para velocidades de 45km/h.

Por su parte, los aparatos proyectados al norte de la estación son de tipología DSIH-G-60-250-0.11-CC-TC-D/I, permitiendo alcanzar los 50km/h por desviada.

5.2.2.2. Ancho ibérico

La cabecera sur destaca por la ubicación de dos vías de apartado que finalizan en el entorno del Arco de Ladrillo y de la Rotonda de Locomotoras.

En cuanto a la zona central, con motivo del espacio reducido restante y la necesidad de ejecución de un nuevo andén para los servicios operados en ancho ibérico se ha optado por estrechar la anchura en los extremos de modo que se logran hasta 4 sectores, tal y como se observa en el esquema funcional:

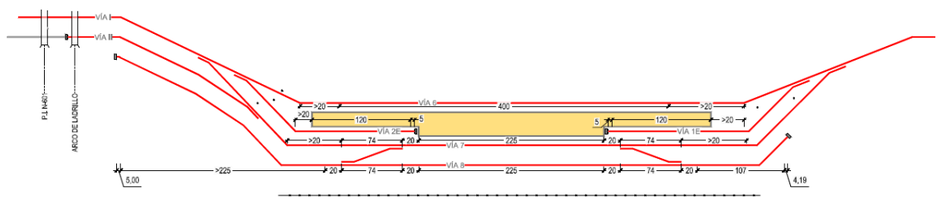

Los usos de cada uno de los sectores se profundizan en el Estudio Funcional.

La cabecera norte en ancho ibérico destaca por radios mínimos de 300 metros y una pendiente inferior a 2‰.

5.2.3. Ámbito Canal Norte

5.2.3.1. Ancho estándar

Las vías en ancho estándar comienzan a la altura del antiguo cambiador de anchos, al norte de la estación.

Se contempla el seguimiento de la traza actual mediante radios superiores a 900 metros hasta la zona del Río Esgueva. En este tramo la pendiente no supera las 5‰.

A la altura del PK 180+850 aproximadamente la vía izquierda comienza a duplicarse.

La construcción de una nueva estructura sobre el cauce obliga a alejar el trazado en planta al menos 6,40 metros aproximadamente de la vía actual, si bien en el estribo norte se alcanzan los 6,35 metros de distancia.

La cota de la vía sobre el río también viene fijada por la cara inferior de la nueva estructura, ya que el trazado previsto no deberá afectar a la lámina hidráulica máxima de las estructuras actuales.

Para ello se ha proyectado una curva contracurva de 2.500 y 2.400 metros de radio respectivamente, aptas para velocidades de 100 km/h. Estos valores, sumados a la diferencia de azimut con respecto a la vía estándar actual orienta la nueva vía izquierda hacia el nuevo paso inferior de Rafael Cano, ejecutado recientemente.

En dicha estructura se ha reservado un espacio de hasta 4,5 metros de entreeje para la vía actual. No obstante, se ha considerado reducir este entreeje hasta situarse entre los 4,2 metros del estribo sur y los 4,03 metros del estribo norte con el fin de permitir mayor espacio en los pasillos laterales.

A partir de este punto, el trazado vuelve a girar a izquierdas con una curva y contracurva de radios 4.750 y 6.000 metros respectivamente, logrando entreejes de 6,5 metros a partir del PK 181+500 aproximadamente.

Mediante este entreeje se sigue el mismo patrón elegido que en la cabecera sur, manteniendo los postes de electrificación existentes en el centro de las dos vías de Alta Velocidad.

En el PK 182+200 aproximadamente se sitúa el apeadero de Valladolid Universidad. Este apeadero cuenta con el andén norte clausurado desde la puesta en servicio de la Alta Velocidad a Palencia y León. La ejecución de la vía izquierda requiere de la demolición de dicho andén, al coincidir éste en planta con dicha vía.

Desde esta zona y hasta el apartadero de Tres Hermanos destaca la existencia de amplios radios, próximos a parámetros en recta. La pendiente es inferior a 1‰.

En la zona de Tres Hermanos la vía izquierda comienza la transición para ocupar la vía derecha debido a la existencia de infraestructuras a esa margen que impiden la prolongación de dicha vía.

Para ello se plantea una curva contracurva de amplios radios, 12.500 metros, que garantizan una velocidad de paso a 240km/h.

Con una secuencia de parámetros similares a la vía nueva el trazado de la vía estándar actual gira con una curva contracurva hasta ocupar la vía en ancho ibérico actual, vía la cual ha de ser migrada a ancho 1,435 metros desde este punto hasta la conexión con la vía doble en el Nudo Norte. Además, se aprovecha esta transición para reducir el entreeje de 6,5 metros a 4,7 metros.

La geometría hasta el final del trazado en el que se bifurcan los corredores de Alta Velocidad y red convencional plantea un encaje prácticamente rectilíneo, finalizando en la transición de la vía existente, de radio 3.150 metros.

ALTERNATIVA 2	VIA	ANCHO	PPKK	COORDENADAS		COTA (m)	PENDIENTE (mm/m)
				X	Y		
REPLANTEO FINAL	2	UIC	187+757,821	360.754,435	4.618.335,183	699,093	14,77
	1	UIC	187+755,982	360.758,041	4.618.333,068	699,090	14,77

5.2.3.2. Ancho ibérico

La vía en ancho convencional se mantiene igual hasta las inmediaciones de la playa de vías de Tres Hermanos.

Puesto que la vía en ancho estándar pasa a desplazarse y ocupar la vía actual en ancho ibérico la vía general convencional debe adoptar una de las tres vías existentes en Tres Hermanos. El desvío de tráfico de mercancías por la Variante Este permite ocupar estas vías, a perder la función por la cual fueron configuradas, el apartado de trenes mercantes en estas instalaciones.

El trazado comienza a virar a derechas con un radio 4500 para posteriormente colocar dos aparatos que permitan velocidades de 200 km/h por directa (si bien éstas no se van a alcanzar en ningún momento).

Los dos aparatos colocados permiten desviarse con velocidades muy dispares. El primero de los aparatos, nombrado con la JCA66 plantea el desvío a 50km/h. En cambio, el aparato 60 favorece la conexión con la segunda vía general, limitando la velocidad a 100km/h.

En la cabecera norte se repite la situación, pasando de tres vías a una. Esta vía única es de nueva ejecución al haberse sustituido la vía de ancho ibérico actual por una vía de ancho estándar.

Un radio a derechas de valor 7.300 metros da comienzo a una recta de 1.437 metros en el PK 255+523.

Tras un radio amplio equivalente a una recta se encuentra la conexión entre las vías de ancho estándar y convencional para lo cual se coloca un aparato mixto.

Esta conexión permite el encaminamiento de las composiciones de ancho estándar a los talleres a través del ramal de vía única y tres hilos existente en la actualidad.

La continuidad de la vía en ancho ibérico hacia el norte junto con la conexión de este mismo ancho hacia el ramal requiere de la colocación de otro aparato mixto. Con motivo de que en el mercado no existen homologados aparatos cuya directa se contemple en ancho ibérico y la desviada sea en ancho mixto se proyecta un aparato de tipo DMMDH-G-60-500-0,071-CM/CR-TC-D, dando de baja la vía directa de ancho 1,435m.

A partir de esta zona la vía continúa por su plataforma hasta el PK 257+092 y radio fijo de 700 metros, punto en el que se fija la unión con la vía actual de la línea Madrid – Hendaya (línea 100 de ADIF).

ALTERNATIVA 2	VIA	ANCHO	PPKK	COORDENADAS		COTA (m)	PENDIENTE (mm/m)
				X	Y		
	6	IB	257+092,062	360.762,599	4.618.319,558	698,955	13,8600
	Ramal	MIXTO	0+063,044	360.379,654	4.617.596,909	697,923	0,0000

6. Superestructura

Los objetivos primordiales de los diferentes elementos que constituyen la superestructura de la vía son:

- Servir de guía a los trenes durante su desplazamiento.
- Transmitir las cargas estáticas y dinámicas que soportan las ruedas a la plataforma, a través del conjunto de sus componentes.

Junto a estas dos funciones principales, debe cumplir con otras de muy diferente condición, como las relacionadas con las instalaciones de seguridad (delimita los cantones en que divide la línea) o con la electrificación (sirve como vehículo para el retorno de la corriente eléctrica).

En este sentido, en este apartado se recogen las características que reúne el armamento de vía y los aparatos de vía empleados para conectar los ejes y por motivos de funcionalidad.

6.1. Traviesas y sujeciones

A continuación, se describen las distintas traviesas y sujeciones empleadas en el presente Estudio.

6.1.1. Traviesas polivalentes PR con sujeción VE

Se utilizarán traviesas polivalentes PR con sujeción VE en los tramos de ancho 1668 mm.

La PR-VE es una traviesa polivalente monobloque de hormigón pretensado con armaduras pretesas o postesas y está provista de 8 vainas antigiro extraíbles AV-1, que se colocan en los moldes antes de proceder al hormigonado de la misma, en cualquiera de las modalidades de fabricación, para que queden embebidas en la traviesa.

Las características geométricas más relevantes de la traviesa tipo PR son las siguientes:

- Longitud: 2,6 metros.

- Peso mínimo (sin sujeción): 310 kg.
- Anchura máxima en la base: 300 mm.
- Altura en la sección bajo eje de carril para ancho 1.668 mm (variable en función del fabricante).
- Altura en la sección bajo eje de carril para ancho 1.435 mm (Variable en función del fabricante).
- Altura en la sección central (Variable en función del fabricante).
- Inclinación del plano de apoyo del carril: 1/20.

Por unidad de traviesa, los componentes del sistema de sujeción, son los siguientes:

- 8 vainas antigiro extraíbles para sujeción VE de poliamida 6.6 reforzada con un 35% de fibra de vidrio para la fabricación del cuerpo de la vaina y poliamida 6 reforzada con un 50% de fibra de vidrio para la fabricación del antigiro (Plano de Mantenimiento de Infraestructuras de ADIF; P16.8001.00).
- 4 tirafondos AV-1 para sujeción VE con arandela, de acero. (Plano de Mantenimiento de Infraestructuras de ADIF; P16.8002.00).
- 2 suplementos soporte de carril (Plano de Mantenimiento de Infraestructuras de ADIF; P16.4562.00).
- 4 clips elásticos SKL-1 de acero. (Plano de Mantenimiento de Infraestructuras de ADIF; P16.0089.00).

Para el carril 60E E1, se tendrán:

- 2 placas de asiento, PAE-2, bajo carril de 7 mm de espesor para carril 60 E1 de material termoplástico. (Plano de Mantenimiento de Infraestructuras de ADIF; P16.5076.00).
- 4 placas acodadas ligeras, A2, de poliamida 6.6 reforzada con un 35% de fibra de vidrio:
  - 2 A2/I-60 placas acodadas ligeras Interiores para carril 60 E1 (Plano de Mantenimiento de Infraestructuras de ADIF; P16.4964.00).
  - 2 A2/E-60 placas acodadas ligeras Exteriores para carril 60 E1 (Plano de Mantenimiento de Infraestructuras de ADIF; P16.4965.00).

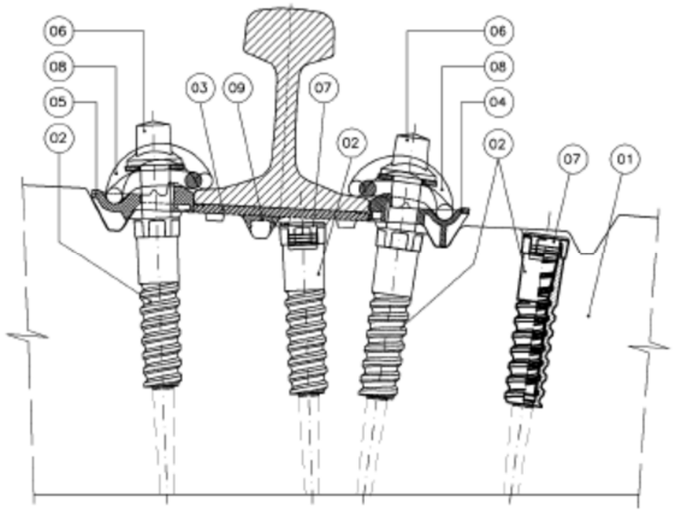

MARCA	DESCRIPCIÓN		CANTIDAD	ESPECIFICACIÓN TÉCNICA O NORMA UNE	Nº DE PLANO Y/O MATRÍCULA	MATERIAL	MASA kg
09	SUPLEMENTO SOPORTE DE CARRIL		1		P16.4562.00 60.750.030		
08	CLIP ELÁSTICO SKL–1		2	E.T. 03.360.564.3	P16.0089.00 60.710.000	38 Si 7	0,481
07	TAPÓN VAINA EXTRAIBLE PR		2			Polietileno LD	
06	TIRAFONDO AV1		2	E.T. 03.360.573.4	P16.8002.00	Tirafondo: Acero 5.6 Arandela: Acero 5.8	0,602
	PLACA ACODADA LIGERA DE SUJECIÓN A2			E.T. 03.360.578.3	P16.4961.00 P16.4962.00 P16.4963.00 P16.4964.00 P16.4965.00 Matrículas: varias	Poliamida 66 +35% F. Vidrio	
	CARRIL 54E1	CARRIL 60E1					
05	A2/E–54	A2/E–60	1				
04	A2/I–54	A2/I–60	1				
	PLACA ELÁSTICA DE ASIENTO PAE			E.T. 03.360.570.0	P16.5075.00 P16.5076.00	Poliéster termoplástico	
	CARRIL 54E1	CARRIL 60E1					
03	PAE–1	PAE–2	1		60.721.054		0,154
					60.721.060		0,160
02	VAINA ANTIGIRO EXTRAÍBLE		4	E.T. 03.360.573.4	P16.8001.00	P.A.66+35% F.V. (CUERPO) P.A.6+50% F.V. (ANTIGIRO)	
01	TRAVIESA PR		1	E.T. 03.360.571.8	P16.5310.01.–08		

6.1.2. Traviesas tipo AI-VE

Se utilizarán traviesas AI con sujeción VE en los tramos de ancho 1435 mm.

La AI-VE es una traviesa monobloque de hormigón pretensado con armaduras pretesas o postesas, con 4 vainas antigiro extraibles AV-1, que se colocan en los moldes antes del hormigonado de la traviesa en cualquiera de las modalidades de fabricación para que queden embebidas en la misma.

Las características geométricas más relevantes de la traviesa tipo AI son las siguientes, y se representan el Documento Nº 2. Planos:

- Longitud: 2,6 metros.
- Peso mínimo (sin sujeción): 320 kg
- Anchura máxima en la base: 300 mm.
- Altura en la sección bajo eje de carril (variable en función del fabricante).
- Altura en la sección central (variable en función del fabricante).

Inclinación del plano de apoyo del carril: 1/20.

Por unidad de traviesa, los componentes del sistema de sujeción, son los siguientes:

- 4 vainas antigiro extraíbles para sujeción VE de poliamida 6.6 reforzada con un 35% de fibra de vidrio para la fabricación del cuerpo de la vaina y poliamida 6 reforzada con un 50% de fibra de vidrio para la fabricación del antigiro (Plano de Mantenimiento de Infraestructuras de ADIF; P16.8001.00).
- 2 placas de asiento, PAE-2, bajo carril de 7mm de espesor de material termoplástico. (Plano de Mantenimiento de Infraestructuras de ADIF; P16.5076.00).
- 4 clips elásticos SKL-1 de acero. (Plano de Mantenimiento de Infraestructuras de ADIF; P16.0089.00).
- 4 tirafondos AV-1 para sujeción VE con arandela, de acero. (Plano de Mantenimiento de Infraestructuras de ADIF; P16.8002.00).
- 4 placas acodadas ligeras, A2, de poliamida 6.6 reforzada con un 35% de fibra de vidrio. (Plano de Mantenimiento de Infraestructuras de ADIF; P16.4961.00).

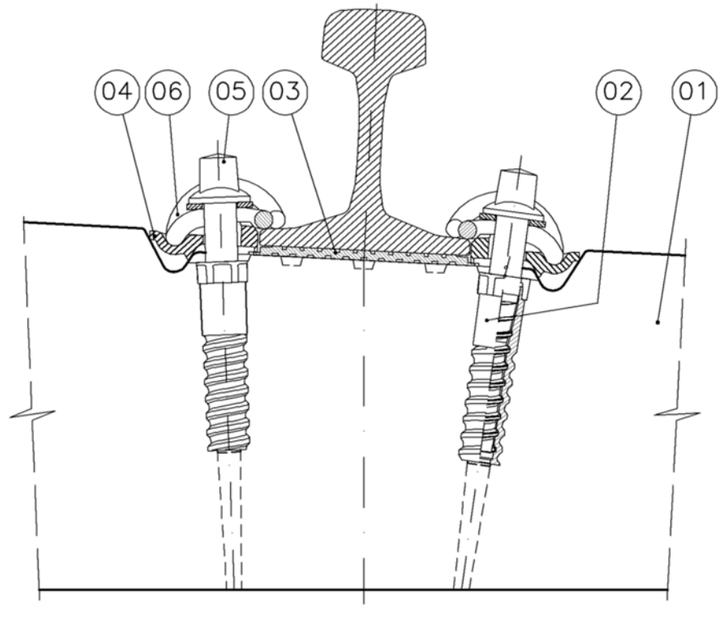

MARCA	DESCRIPCIÓN	CANTIDAD	ESPECIFICACIÓN TÉCNICA O NORMA UNE	Nº DE PLANO Y/O MATRÍCULA	MATERIAL	MASA kg
06	CLIP ELÁSTICO SKL-1	2	E.T. 03.360.564.3	P16.0089.00 60.710.000	38 Si 7	0,481
05	TIRAFONDO AV1	2	E.T. 03.360.573.4	P16.8002.00	Tirafondo: Acero 5.6 Arandela: Acero 5.8	
04	PLACA ACODADA LIGERA DE SUJECIÓN A2	2	E.T. 03.360.578.3	P16.4961.00	Poliamida 66 +35% F. Vidrio	
03	PLACA ELÁSTICA DE ASIENTO PAE-2	1	E.T. 03.360.570.0	P16.5076.00	Poliéster termoplástico	
02	VAINA ANTIGIRO EXTRAÍBLE	2	E.T. 03.360.573.4	P16.8001.00	P.A.66+35% F.V. (CUERPO) P.A.6+50% F.V. (ANTIGIRO)	
01	TRAVIESA AI	1	E.T. 03.360.571.8	P16.5315.01-.08		

6.1.3. Traviesas de tres hilos AM-VE

La AM-VE es una traviesa monobloque de hormigón pretensado con armaduras pretesas o postesas, con 6 vainas antigiro extraibles AV-1, que se colocan en los moldes antes del hormigonado de la traviesa en cualquiera de las modalidades de fabricación para que queden embebidas en la misma.

El aumento de las dimensiones de esta traviesa frente a las convencionales hace que alcance un peso superior a los 400 kg (la traviesa tipo MR/PR pesa unos 300 kg).

En el diseño de la traviesa, cualquiera que sea la sujeción a emplear y dada la corta distancia entre los dos patines de carril cercanos, han influido los siguientes factores:

- El ancho de la base superior de la traviesa (zona de apoyo de las sujeciones), es mayor que el de la traviesa estándar, a fin de que tengan cabida y trabajen adecuadamente los elementos de la sujeción en esta zona, ello independientemente del cálculo de momentos resistentes del hormigón, por las dos configuraciones (dos anchos) de trabajo.
- La distribución de las varillas de tesado se ha estudiado en detalle, dado que las líneas longitudinales ocupadas por los anclajes de la sujeción son 3 diferentes, frente a 1 en la traviesa tradicional, de forma que alguna varilla "envuelva" los anclajes por el exterior.
- Los ejes de las placas elásticas de asiento coinciden con los de las sujeciones.
- El bateo se tiene que realizar con bateadoras de desvíos.

Las características geométricas más relevantes de la traviesa tipo AM son las siguientes, y se representan el Documento Nº 2. Planos:

- Longitud: 2,75 metros.
- Peso mínimo (sin sujeción): 320 kg.
- Anchura máxima en la base: 300 mm.
- Altura en la sección bajo eje de carril 232 mm.
- Altura en la sección central 210 mm.
- Inclinación del plano de apoyo del carril: 1/20.

Por unidad de traviesa, los componentes del sistema de sujeción, para carril 60 E1, son los siguientes:

- 6 vainas antigiro extraíbles para sujeción VE de poliamida 6.6 reforzada con un 35% de fibra de vidrio para la fabricación del cuerpo de la vaina y poliamida 6 reforzada con un 50% de fibra de vidrio para la fabricación del antigiro (Plano de Mantenimiento de Infraestructuras de ADIF; P16.8001.00).
- 3 placas de asiento elásticas bajo carril de 7mm de espesor de material termoplástico, (dependerá del plano de la traviesa).
- 6 clips elásticos SKL-1 de acero. (Plano de Mantenimiento de Infraestructuras de ADIF; P16.0089.00).
- 6 tirafondos AV-1 para sujeción VE con arandela, de acero. (Plano de Mantenimiento de Infraestructuras de ADIF; P16.8002.00)
- 6 placas acodadas ligeras, A2, de poliamida 6.6 reforzada con un 35% de fibra de vidrio, 2 A2/E-60, 3 A2/I-60 y 1 A2/E-60/-2,5.

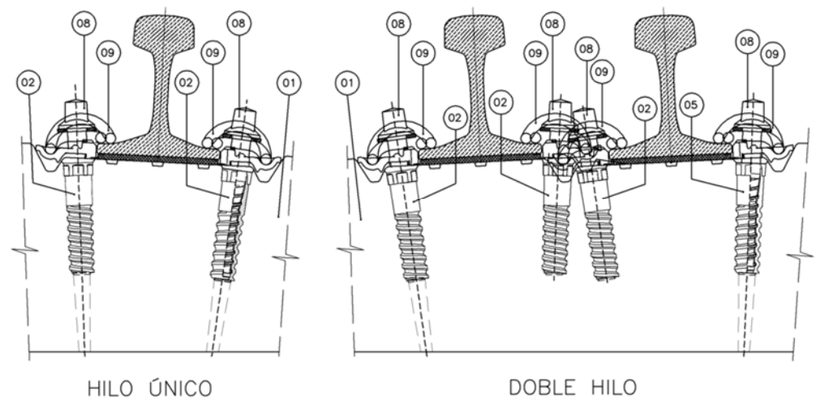

09	CLIP ELÁSTICO SKL-1		6	E.T. 03.360.564.3	P16.0089.00 60.710.000	38 Si 7	0,481
08	TIRAFONDO AV1		6	E.T. 03.360.573.4	P16.8002.00	Tirafondo: Acero 5.6 Arandela: Acero 5.8	0,602
	PLACA ACODADA LIGERA DE SUJECIÓN A2			E.T. 03.360.578.3	P16.4961.00 P16.4962.00 P16.4963.00 P16.4964.00 P16.4965.00 Matrículas: varias	Poliamida 66 +35% F. Vidrio	
	CARRIL 54E1	CARRIL 60E1					
07	A2/E-54	A2/E-60	2				
06	A2/I-54	A2/I-60	3				
05	A2/E-54/-2,5	A2/E-60/-2,5	1				
	PLACA ELÁSTICA DE ASIENTO PAE			E.T. 03.360.570.0	P16.5076.00	Poliéster termoplástico	
	CARRIL 54E1	CARRIL 60E1					
04	PAE-1	PAE-2	1		60.721.054		0,154
03	PAE Z54	PAE Z60	2		60.721.060		0,160
02	VAINA ANTIGIRO EXTRAÍBLE		6	E.T. 03.360.573.4	P16.8001.00	P.A.66+35% F.V. (CUERPO) P.A.6+50% F.V. (ANTIGIRO)	

6.2. Carril

El carril será del tipo 60 E1 de calidad 260 (antiguo UIC-60 de calidad 900 A). Llegará a obra en forma de barra larga elemental de 108 metros. Una vez en vía se conforman las barras largas soldadas definitivas mediante soldadura eléctrica o aluminotérmica.

Sus características serán las siguientes, referidas a la Norma Europea CEN/TC256/WG4 “Flat Bottom symmetrical railway rails 46 kg/m and above” (Carriles simétricos de base plana de 46 kg/m y superiores) de marzo de 1998:

- Perfil del carril: clase X
- Enderezado: clase A
- Grado del acero: 260 (Carbono-Manganeso)
- Resistencia a tracción: Rm ≥ 880 N/mm²
- Dureza: 260/300 HBW
- Alargamiento: A ≥ 10%

Otras características geométricas fundamentales que deberán cumplir estrictamente las barras elementales procedentes de la acería tienen relación con las tolerancias del acabado del perfil, la rectitud en los extremos, la planitud superficial y la torsión.

6.3. Aparatos de vía

En la definición del trazado se han empleado desvíos y escapes, que se indican a continuación. La numeración de los aparatos se efectúa con el siguiente criterio: tendrán número impar los aparatos posicionados del lado de la cabecera sur de la estación Valladolid – Campo Grande y en el canal sur, y número par los posicionados en el lado de la cabecera norte de la estación y en el canal norte. La numeración es creciente y secuencial, teniendo en cuenta la paridad, conforme la posición del aparato se aleja de la estación.

La nomenclatura para los desvíos de tres hilos se caracteriza fundamentalmente por:

- Cuatro primeras letras:
  - 1ª letra: D=desvío; ES= Escape
  - 2ª letra: vía directa a la salida del desvío: M=mixta, R=RENFE (1.668 mm), I=Internacional (1435 mm)
  - 3ª letra: vía desviada: M=MIXTO, R=RENFE, I=Internacional
  - 4ª letra: situación del tercer carril: D=derecha, I=Izquierda).

Ultima letra: representa el lado hacia el que sale la vía desviada: I=Izquierda; D= Derecha.

6.3.1. Alternativa 1

JCA	PPKK	MATRICULA	X	Y	Z (m)
1	179+300,857	DSIH-G-60-318-0,09-CR-TC-D	356.177,090	4.611.466,436	691,85
3	179+306,802	DSIH-G-60-318-0,09-CR-TC-I	356.175,489	4.611.470,102	691,849
5	0+130,666	DS-C-54-250-0,11-CR-I	356.038,654	4.611.366,722	691,954
7	0+819,163	DS-C-54-318-0,09-CR-I	356.033,533	4.611.378,251	691,995
9	0+096,215	DS-C-54-250-0,11-CR-I	356.004,851	4.611.360,071	692,032
11	0+782,055	DS-C-54-250-0,11-CR-I	355.998,194	4.611.366,930	692,045
13	179+073,959	DSIH-G-60-250-0,11-CC-D	355.969,101	4.611.375,756	692,109
15	0+061,768	DS-C-54-250-0,11-CR-I	355.971,052	4.611.353,420	692,111
17	179+014,353	DSIH-G-60-250-0,11-CC-D	355.907,387	4.611.353,280	692,173
19	178+995,994	DSIH-G-60-250-0,11-CC-D	355.897,604	4.611.344,663	692,187
21	0+651,944	DS-C-54-318-0,09-CR-D	355.875,349	4.611.324,928	692,131
23	0+181,975	DSH-P1-60-318-0,09-CR-TC-D	355.590,953	4.610.972,084	691,284
25	178+465,442	DSIH-G-60-500-0,09-CC-I	355.568,018	4.610.951,033	691,249
27	247+748,196	DSH-P1-60-318-0,09-CR-TC-D	355.559,216	4.610.892,514	691,047
29	178+349,882	DSIH-G-60-500-0,09-CC-I	355.538,083	4.610.841,151	690,842

JCA	PPKK	MATRICULA	X	Y	Z (m)
2	179+374,654	DSIH-G-60-318-0,09-CR-TC-I	356.244,716	4.611.495,980	691,812
4	179+380,599	DSIH-G-60-318-0,09-CR-TC-D	356.243,115	4.611.499,645	691,811
6	0+575,351	DS-C-54-250-0,11-CR-D	356.445,809	4.611.540,904	692,073
8	0+609,794	DS-C-54-250-0,11-CR-D	356.474,268	4.611.560,305	692,11
10	1+322,291	DS-C-54-250-0,11-CR-I	356.494,678	4.611.578,242	692,138
12	0+507,115	DS-C-54-250-0,11-CR-D	356.492,313	4.611.587,775	692,141
14	1+367,290	DS-C-54-250-0,11-CR-I	356.534,407	4.611.599,372	692,185
16	0+320,718	DSIH-G-60-250-0,11-CC-I	356.540,700	4.611.637,810	692,258
18	179+755,635	DSIH-G-60-250-0,11-CC-D	356.585,106	4.611.653,381	692,292
20	179+773,895	DSIH-G-60-250-0,11-CC-I	356.609,628	4.611.657,590	692,307
22	1+486,605	DS-C-54-250-0,11-CR-D	356.639,750	4.611.655,397	692,31
24	0+726,290	DS-C-54-250-0,11-CR-I	356.690,123	4.611.681,766	692,369
26	179+859,852	DSIH-G-60-500-0,09-CC-I	356.689,001	4.611.690,563	692,372

JCA	PPKK	MATRICULA	X	Y	Z (m)
28	179+953,798	DSIH-G-60-500-0,09-CC-I	356.768,224	4.611.728,950	692,464
30	0+913,634	DSH-P1-60-318-0,09-CR-TC-D	356.862,243	4.611.755,741	692,647
32	180+971,947	DSH-P-60-318-0,09-CR-D	357.523,181	4.612.369,759	696,711
34	4+567,127	DSH-P1-60-318-0,09-CR-TC-D	358.822,578	4.614.762,992	697,102
36	0+089,040	DSH-P1-60-318-0,09-CR-TC-I	358.891,929	4.614.869,861	697,045
38	0+108,146	DSH-P1-60-318-0,11-CC-TC-I	358.902,494	4.614.885,780	697,052
40	0+156,770	DSH-P1-60-318-0,11-CC-TC-I	358.929,384	4.614.926,293	697,072
42	0+750,824	DSH-P1-60-318-0,09-CR-TC-D	359.211,268	4.615.448,667	697,25
44	0+806,604	DSH-P1-60-318-0,09-CR-TC-D	359.233,320	4.615.499,903	697,25
46	0+806,606	DSH-P1-60-318-0,09-CR-TC-D	359.233,321	4.615.499,904	697,25
48	5+540,691	DSIH-G-60-318-0,09-CR-TC-I	359.286,074	4.615.619,145	697,35
50	186+315,992	DSIH-G-60-250-0,11-CC-D	360.066,664	4.617.069,707	697,911
52	7+252,439	DIRDH-G-60-250-0,11-CR-TC-D	360.100,893	4.617.124,520	697,912
54	187+358,913	DSIH-AV-60-17000/7300-1:50-CC-TC-D	360.563,264	4.617.986,806	697,932

6.3.2. Alternativa 2

JCA	PPKK	MATRICULA	X	Y	Z (m)
1	179+387,193	DSIH-G-60-318-0,09-CR-TC-D	356.249,183	4.611.502,208	691,852
3	179+381,204	DSIH-G-60-318-0,09-CR-TC-I	356.250,784	4.611.498,543	691,852
5	0+358,739	DSIH-G-60-318-0,09-CR-TC-D	356.255,304	4.611.488,186	691,852
7	0+358,739	DSIH-G-60-318-0,09-CR-TC-I	356.256,907	4.611.484,515	691,852
9	0+219,229	DSH-P1-60-318-0,09-CR-TC-I	356.185,159	4.611.421,839	691,869
11	0+245,510	DSH-P1-60-318-0,09-CR-TC-I	356.119,122	4.611.388,645	691,95
13	0+035,570	DSH-P1-60-318-0,09-CR-TC-I	356.011,694	4.611.364,382	692,006
15	179+097,051	DSIH-G-60-250-0,11-CC-TC-D	355.990,365	4.611.384,853	692,085
17	248+420,848	DSH-P1-60-318-0,09-CR-TC-D	355.982,177	4.611.362,164	692,05
19	248+376,224	DSH-P1-60-318-0,09-CR-TC-D	355.939,002	4.611.350,884	692,118
21	0+011,909	DSIH-G-60-318-0,11-CC-TC-D	355.934,768	4.611.356,992	692,147
23	179+037,492	DSIH-G-60-250-0,11-CC-TC-D	355.928,693	4.611.362,292	692,151
25	179+024,065	TUDIH-G(+3)-UIC60-190-0,11-CR-TC-D	355.923,476	4.611.355,651	692,158
27	178+993,211	DSIH-G-60-318-0,11-CC-TC-D	355.888,110	4.611.344,574	692,195
29	178+987,221	DSIH-G-60-318-0,11-CC-TC-D	355.889,710	4.611.340,910	692,195
31	178+465,442	DSIH-G-60-500-0,09-CC-TC-I	355.568,018	4.610.951,033	691,243
33	178+349,882	DSIH-G-60-500-0,09-CC-TC-I	355.538,083	4.610.841,151	690,842
35	178+209,241	DSIH-G-60-500-0,09-CC-TC-D	355.493,876	4.610.707,638	690,634
37	178+096,164	DSIH-G-60-500-0,09-CC-TC-D	355.451,700	4.610.600,553	690,505

JCA	PPKK	MATRICULA	X	Y	Z (m)
2	179+460,991	DSIH-G-60-318-0,09-CR-TC-I	356.316,816	4.611.531,735	691,919
4	179+455,001	DSIH-G-60-318-0,09-CR-TC-D	356.318,416	4.611.528,069	691,919
6	0+432,622	DSIH-G-60-318-0,09-CR-TC-I	356.323,016	4.611.517,747	691,919
8	0+432,622	DSIH-G-60-318-0,09-CR-TC-D	356.324,620	4.611.514,072	691,919
10	0+658,115	DSH-P1-60-318-0,09-CR-TC-D	356.497,262	4.611.553,728	692,26
12	0+050,779	DSH-P1-60-250-0,11-CR-TC-I	356.528,762	4.611.632,436	692,247
14	179+778,208	DSIH-G-60-250-0,11-CC-TC-D	356.607,536	4.611.658,654	692,326
16	249+126,738	DSH-P1-60-318-0,09-CR-TC-I	356.627,461	4.611.644,293	692,337
18	179+821,770	DSIH-G-60-250-0,11-CC-TC-D	356.647,460	4.611.676,083	692,368
20	249+171,362	DSH-P1-60-318-0,09-CR-TC-I	356.665,725	4.611.667,253	692,38
22	179+840,226	DSIH-G-60-318-0,11-CC-TC-I	356.671,463	4.611.682,198	692,392
24	0+854,328	DSIH-G-60-318-0,11-CC-TC-I	356.706,177	4.611.692,991	692,426
26	179+881,341	DSIH-G-60-250-0,11-CC-TC-D	356.709,144	4.611.698,648	692,431
28	179+893,492	DSIH-G-60-318-0,11-CC-TC-I	356.720,280	4.611.703,510	692,442
30	179+971,510	DSIH-G-60-318-0,11-CC-TC-I	356.784,692	4.611.735,995	692,511
32	179+971,471	DSIH-G-60-318-0,11-CC-TC-I	356.791,746	4.611.734,709	692,517
34	179+988,153	DSIH-G-60-250-0,11-CC-TC-I	356.807,034	4.611.741,384	692,533
36	180+059,705	DSIH-G-60-250-0,11-CC-TC-I	356.865,520	4.611.771,282	692,753
38	253+088,157	DSH-P1-60-500-0,071-CR-TC-D	358.848,167	4.614.803,259	697,12
40	253+141,072	DSH-P1-60-1500-0,042-CR-TC-D	358.874,873	4.614.848,940	697,141
42	253+876,115	DSH-P1-60-1500-0,042-CR-TC-I	359.228,014	4.615.493,473	697,35
44	253+929,013	DSH-P1-60-500-0,071-CR-TC-I	359.252,399	4.615.540,415	697,35
46	186+060,318	DSIH-AV4-60-760-1:14-CM-TC-D	359.944,232	4.616.843,533	697,905
48	186+168,838	DSIH-AV4-60-760-1:14-CM-TC-D	360.000,213	4.616.938,560	697,908
50	186+332,930	DSIH-GAV-60-1500-0,042-CRM-TC-D	360.078,336	4.617.082,863	697,911
52	255+893,591	DMIIH-G-60-1500-0,042-CR-TC-D	360.186,392	4.617.268,765	697,915
54	256+165,050	DMMDH-G-60-500-0,071-CM/CR-TC-D	360.317,694	4.617.506,350	697,921

APÉNDICE 1. JUSTIFICACIÓN DE PARÁMETROS

PLANTA ANCHO 1.668 MM

EJE 77

VIA 1 - VIA 6 IBERICO

	Alineación	PPKK		Longitud de alineación (m)	Radio (m)	Velocidad proyectada (km/h)		Longitud mínima de alineación por velocidad (m)		Parámetro de clotoide	Parámetros adoptados en curva circular								Parámetros adoptados en curva de transición clotoide							
											Peralte (mm)		Insuficiencia de peralte (mm)		Variación brusca insuf. de peralte (mm)	Exceso de peralte (mm)		Aceleración sin compensar a_{sc} (m/s^2)		Rampa de peralte (mm/m)				Variación peralte con el tiempo (mm/s)		Variación insuficiencia peralte con el tiempo (mm/s)		Variación aceleración sin compensar con el tiempo (m/s^3)	
											V≤140km/h		V≤140km/h		Límite función de la velocidad	V≤140km/h		V≤140km/h		V≤140km/h		140<V≤160 km/h		V≤140km/h		V≤140km/h		V≤140km/h	
		Inicial	Final			Máxima	Mínima	N=0,5xV	E=0,4xV		N=160	E=160	N=115	E=115		N=80	E=110	N=0,65	E=0,65	N=1,15	E=1,15	N=1,00	E=1,00	N=45	E=45	N=35	E=35	N=0,20	E=0,20
CUADRO 1	RECTA	244+217,757	244+278,920	61,163		160	0	80	64																				
	CIRC,	244+278,920	244+359,874	80,954	649996,133	160	0	80	64		0		x		1 ≤ 92	0		0											
	RECTA	244+359,874	244+883,462	523,588		160	0	80	64																				
	CIRC,	244+883,462	244+967,248	83,787	-330003,867	160	0	80	64		0		x		1 ≤ 92	0		0,01											
	CIRC,	244+967,248	245+110,864	143,616	499996,133	160	0	80	64		0		x		1 ≤ 92	0		0											
	RECTA	245+110,864	245+406,096	295,233		160	0	80	64																				
	CIRC,	245+406,096	245+564,592	158,496	-500003,867	160	0	80	64		0		x		1 ≤ 92	0		0											
	RECTA	245+564,592	245+940,832	376,239		160	0	80	64																				
	CIRC,	245+940,832	246+030,631	89,8	-150003,867	160	0	80	64		0		x		2 ≤ 92	0		0,01											
	CIRC,	246+030,631	246+125,666	95,034	149996,133	160	0	80	64		0		x		2 ≤ 92	0		0,01											
	RECTA	246+125,666	246+742,053	616,388		160	0	80	64																				
	CIRC,	246+742,053	246+820,741	78,688	-300003,867	160	0	80	64		0		x		1 ≤ 92	0		0,01											
	CIRC,	246+820,741	246+876,139	55,397	369996,133	160	0	80	64		0		x		1 ≤ 92	0		0,01											
	RECTA	246+876,139	247+302,200	426,061		160	0	80	64																				
	CIRC,	247+302,200	247+384,242	82,042	99996,133	160	0	80	64		0		x		4 ≤ 92	0		0,02											
	CIRC,	247+384,242	247+468,960	84,718	-100003,867	160	0	80	64		0		x		4 ≤ 92	0		0,02											
	RECTA	247+468,960	247+552,302	83,342		160	0	80	64																				
	CIRC,	247+552,302	247+605,839	53,537	-40003,867	160	0	80	64		0		x		9 ≤ 92	0		0,05											
	CIRC,	247+605,839	247+667,700	61,861	39996,133	160	0	80	64		0		x		9 ≤ 92	0		0,05											
	RECTA	247+667,700	247+830,622	162,921		160	0	80	64																				
	CLOT,	247+830,622	247+978,534	147,912		50	0			267,285										0,14	x	1,88	4,78	0,03				
	CIRC,	247+978,534	248+193,273	214,74	483	50	0	40	36		20		51		x	20		0,29											
	CLOT,	248+193,273	248+203,273	10		50	0			237,827										0,50	x	6,94	1,39	0,00				
	CIRC,	248+203,273	248+311,047	107,774	445	50	0	40	36		25		52		x	25		0,29											
	CLOT,	248+311,047	248+336,047	25		50	0			318,019										1,00	x	13,89	28,89	0,16				
	CIRC,	248+336,047	248+376,135	40,088	500	50	0	40	36		0		x		69 ≤ 110	0		0,39											
	RECTA	248+376,135	248+465,919	89,785		50	0	40	36																				
	CIRC,	248+465,919	248+543,954	78,035	-500	50	0	40	36		0		x		69 ≤ 110	0		0,39											
	RECTA	248+543,954	248+983,328	439,374		50	0	40	36																				
	CIRC,	248+983,328	249+060,631	77,303	-600	50	0	40	36		0		x		57 ≤ 110	0		0,32											
	RECTA	249+060,631	249+175,360	114,728		50	0	40	36																				
	CIRC,	249+175,360	249+222,452	47,092	350	50	0	40	36		0		x		98 ≤ 110	0		0,65											

EJE 77

VIA 1 - VIA 6 IBERICO

Alineación	PPKK		Longitud de alineación (m)	Radio (m)	Velocidad proyectada (km/h)		Longitud mínima de alineación por velocidad (m)		Parámetro de clotoide	Parámetros adoptados en curva circular								Parámetros adoptados en curva de transición clotoide							
										Peralte (mm)		Insuficiencia de peralte (mm)		Variación brusca insuf. de peralte (mm)	Exceso de peralte (mm)		Aceleración sin compensar a_{sc} (m/s^2)		Rampa de peralte (mm/m)				Variación peralte con el tiempo (mm/s)		Variación insuficiencia peralte con el tiempo (mm/s)		Variación aceleración sin compensar con el tiempo (m/s^3)	
										V≤140km/h		V≤140km/h		Límite función de la velocidad	V≤140km/h		V≤140km/h		V≤140km/h		140<V≤160 km/h		V≤140km/h		V≤140km/h		V≤140km/h	
	Inicial	Final			Máxima	Mínima	N=0,5xV	E=0,4xV		N=160	E=160	N=115	E=115		N=80	E=110	N=0,65	E=0,65	N=1,15	E=1,15	N=1,00	E=1,00	N=45	E=45	N=35	E=35	N=0,20	E=0,20
RECTA	249+222,452	249+404,800	182,348		120	0	60	48																				
CLOT,	249+404,800	249+651,957	247,157		120	0			487,058										0,42		x		14,16		13,62		0,08	
CIRC,	249+651,957	250+106,072	454,115	-959,816	120	0	60	48		105		101		x	76		0,57											
CLOT,	250+106,072	250+236,419	130,346		120	0			353,707										0,81		x		26,85		25,83		0,15	
RECTA	250+236,419	250+453,672	217,253		150	0	75	60																				
CLOT,	250+453,672	250+463,672	10		150	0			921,954										x		0,00		0,00		16,67		0,08	
CIRC,	250+463,672	250+531,208	67,536	85000	150	0	75	60		0		4		x	0		0,02											
CLOT,	250+531,208	250+541,208	10		150	0			921,954										x		0,00		0,00		16,67		0,08	
RECTA	250+541,208	251+753,539	1212,331		150	0	75	60																				
CLOT,	251+753,539	251+783,539	30		150	0			2449,49										x		0,00		0,00		2,78		0,01	
CIRC,	251+783,539	251+861,116	77,577	200000	150	0	75	60		0		2		x	0		0,01											
CLOT,	251+861,116	251+891,116	30		150	0			2449,49										x		0,00		0,00		2,78		0,01	
CLOT,	251+891,116	251+921,116	30		150	0			2449,49										x		0,00		0,00		2,78		0,01	
CIRC,	251+921,116	252+001,826	80,71	-200000	150	0	75	60		0		2		x	0		0,01											
CLOT,	252+001,826	252+031,826	30		150	0			2449,49										x		0,00		0,00		2,78		0,01	
RECTA	252+031,826	252+884,120	852,294		150	0	75	60																				
CLOT,	252+884,120	252+939,120	55		150	0			497,494										x		0,64		26,52		27,76		0,14	
CIRC,	252+939,120	253+032,843	93,722	4500	150	0	75	60		35		34		x	35		0,19											
CLOT,	253+032,843	253+087,843	55		150	0			497,494										x		0,64		26,52		27,76		0,14	
RECTA	253+087,843	253+241,285	153,443		150	0	75	60																				
CLOT,	253+241,285	253+296,285	55		150	0			497,494										x		0,64		26,52		27,76		0,14	
CIRC,	253+296,285	253+389,111	92,825	-4500	150	0	75	60		35		34		x	35		0,19											
CLOT,	253+389,111	253+444,111	55		150	0			497,494										x		0,64		26,52		27,76		0,14	
RECTA	253+444,111	253+626,639	182,529		150	0	75	60																				
CLOT,	253+626,639	253+659,139	32,5		150	0			487,083										x		0,62		25,64		28,21		0,17	
CIRC,	253+659,139	253+751,479	92,339	-7300	150	0	75	60		20		22		x	20		0,13											
CLOT,	253+751,479	253+783,979	32,5		150	0			487,083										x		0,62		25,64		28,21		0,17	
RECTA	253+783,979	253+929,167	145,188		150	0	75	60																				
CLOT,	253+929,167	253+961,667	32,5		150	0			487,083										x		0,62		25,64		28,21		0,17	
CIRC,	253+961,667	254+053,220	91,553	7300	150	0	75	60		20		22		x	20		0,13											
CLOT,	254+053,220	254+085,720	32,5		150	0			487,083										x		0,62		25,64		28,21		0,17	
RECTA	254+085,720	255+522,497	1436,777		160	0	70	56																				
CIRC,	255+522,497	255+643,546	121,049	600000	160	0	70	56		0		x		1 ≤ 92	0		0,01											
RECTA	255+643,546	255+942,338	298,792		160	0	70	56																				
CLOT,	255+942,338	255+977,338	35		160	0			519,134										x		0,71		31,75		26,67		0,15	
CIRC,	255+977,338	256+068,766	91,427	7700	160	0	70	56		25		21		x	25		0,12											
CLOT,	256+068,766	256+103,766	35		160	0			519,134										x		0,71		31,75		26,67		0,15	
RECTA	256+103,766	256+234,725	130,959		160	0	70	56																				
CLOT,	256+234,725	256+269,725	35		160	0			512,348										x		0,71		31,75		27,94		0,15	
CIRC,	256+269,725	256+359,457	89,732	-7500	160	0	70	56		25		22		x	25		0,12											
CLOT,	256+359,457	256+394,457	35		160	0			512,348										x		0,71		31,75		27,94		0,15	
RECTA	256+394,457	256+761,315	366,857		160	0	70	56																				
CLOT,	256+761,315	256+776,315	15		160	0			504,975										x		0,67		29,63		32,59		0,18	
CIRC,	256+776,315	256+881,484	105,169	-17000	160	0	70	56		10		11		x	10		0,06											
CLOT,	256+881,484	256+896,484	15		160	0			504,975										x		0,67		29,63		32,59		0,18	
CLOT,	256+896,484	256+936,484	40		100	0			489,898										x		0,25		6,94		9,03		0,05	

EJE 77

VIA 1 - VIA 6 IBERICO																											
Alineación	PPKK		Longitud de alineación (m)	Radio (m)	Velocidad proyectada (km/h)		Longitud mínima de alineación por velocidad (m)		Parámetro de clotoide	Parámetros adoptados en curva circular								Parámetros adoptados en curva de transición clotoide									
										Peralte (mm)		Insuficiencia de peralte (mm)		Variación brusca insuf. de peralte (mm)	Exceso de peralte (mm)		Aceleración sin compensar a_{sc} (m/s^2)		Rampa de peralte (mm/m)				Variación peralte con el tiempo (mm/s)		Variación insuficiencia peralte con el tiempo (mm/s)		Variación aceleración sin compensar con el tiempo (m/s^3)	
										V≤140km/h		V≤140km/h		Límite función de la velocidad	V≤140km/h		V≤140km/h		V≤140km/h		140<V≤160 km/h		V≤140km/h		V≤140km/h		V≤140km/h	
	Inicial	Final			Máxima	Mínima	N=0,5xV	E=0,4xV		N=160	E=160	N=115	E=115		N=80	E=110	N=0,65	E=0,65	N=1,15	E=1,15	N=1,00	E=1,00	N=45	E=45	N=35	E=35	N=0,20	E=0,20
CIRC,	256+936,484	257+033,983	97,499	6000	100	0	100	0		10		13		x	10		0,07											
CLOT,	257+033,983	257+073,983	40		100	0			178,04										x		0,63		17,36		33,33		0,19	
CIRC,	257+073,983	257+092,062	18,079	700	70	0	70	0		35		61		x	35		0,34											

EJE 71

CUADRO 2

VIA 7 IBERICO																											
Alineación	PPKK		Longitud de alineación (m)	Radio (m)	Velocidad proyectada (km/h)		Longitud mínima de alineación por velocidad (m)		Parámetro de clotoide	Parámetros adoptados en curva circular								Parámetros adoptados en curva de transición clotoide									
										Peralte (mm)		Insuficiencia de peralte (mm)		Variación brusca insuf. de peralte (mm)	Exceso de peralte (mm)		Aceleración sin compensar a_{sc} (m/s^2)		Rampa de peralte (mm/m)				Variación peralte con el tiempo (mm/s)		Variación insuficiencia peralte con el tiempo (mm/s)		Variación aceleración sin compensar con el tiempo (m/s^3)	
										V≤140km/h		V≤140km/h		Límite función de la velocidad	V≤140km/h		V≤140km/h		V≤140km/h		140<V≤160 km/h		V≤140km/h		V≤140km/h		V≤140km/h	
	Inicial	Final			Máxima	Mínima	N=0,5xV	E=0,4xV		N=160	E=160	N=115	E=115		N=80	E=110	N=0,65	E=0,65	N=1,15	E=1,15	N=1,00	E=1,00	N=45	E=45	N=35	E=35	N=0,20	E=0,20
RECTA	0+000,000	0+067,321	67,321		45	0	22,5	18																				
CIRC,	0+067,321	0+141,069	73,749	-300	45	0	22,5	18		0		x		92 ≤ 110	0		0,52											
RECTA	0+141,069	0+571,925	430,856		45	0	22,5	18																				
CIRC,	0+571,925	0+637,504	65,579	-300	45	0	22,5	18		0		x		92 ≤ 110	0		0,52											
RECTA	0+637,504	0+722,667	85,163		45	0	22,5	18																				

EJE 69

CUADRO 3

VIA 8 IBERICO

Alineación	PPKK Inicial	PPKK Final	Longitud de alineación (m)	Radio (m)	Velocidad proyectada (km/h) Máxima	Velocidad proyectada (km/h) Mínima	Longitud mínima de alineación por velocidad (m) N=0,5xV	Longitud mínima de alineación por velocidad (m) E=0,4xV	Parámetro de clotoide	Parámetros adoptados en curva circular: Peralte (mm) V≤140km/h N=160	Peralte (mm) V≤140km/h E=160	Insuficiencia de peralte (mm) V≤140km/h N=115	Insuficiencia de peralte (mm) V≤140km/h E=115	Variación brusca insuf. de peralte (mm) Límite función de la velocidad	Exceso de peralte (mm) V≤140km/h N=80	Exceso de peralte (mm) V≤140km/h E=110	Aceleración sin compensar a_{sc} (m/s²) V≤140km/h N=0,65	Aceleración sin compensar a_{sc} (m/s²) V≤140km/h E=0,65	Parámetros adoptados en curva de transición clotoide: Rampa de peralte (mm/m) V≤140km/h N=1,15	Rampa de peralte (mm/m) V≤140km/h E=1,15	Rampa de peralte (mm/m) 140<V≤160 km/h N=1,00	Rampa de peralte (mm/m) 140<V≤160 km/h E=1,00	Variación peralte con el tiempo (mm/s) V≤140km/h N=45	Variación peralte con el tiempo (mm/s) V≤140km/h E=45	Variación insuficiencia peralte con el tiempo (mm/s) V≤140km/h N=35	Variación insuficiencia peralte con el tiempo (mm/s) V≤140km/h E=35	Variación aceleración sin compensar con el tiempo (m/s³) V≤140km/h N=0,20	Variación aceleración sin compensar con el tiempo (m/s³) V≤140km/h E=0,20
CIRC,	0+000,000	0+063,314	63,314	500	45	0	22,5	18		0		x		55 ≤ 110	0		0,31											
RECTA	0+063,314	0+102,226	38,912		45	0																						
CIRC,	0+102,226	0+138,129	35,903	400	45	0				0		x		69 ≤ 110	0		0,39											
RECTA	0+138,129	0+166,910	28,78		45	0																						
CIRC,	0+166,910	0+240,658	73,748	-300	45	0				0		x		92 ≤ 110	0		0,52											
RECTA	0+240,658	0+672,447	431,789		45	0																						
CIRC,	0+672,447	0+738,026	65,579	-300	45	0				0		x		92 ≤ 110	0		0,52											
RECTA	0+738,026	0+789,308	51,282		45	0																						

EJE 100

CUADRO 4

MANGO SUR IBERICO

Alineación	PPKK Inicial	PPKK Final	Longitud de alineación (m)	Radio (m)	Velocidad proyectada (km/h) Máxima	Velocidad proyectada (km/h) Mínima	Longitud mínima de alineación por velocidad (m) N=0,5xV	Longitud mínima de alineación por velocidad (m) E=0,4xV	Parámetro de clotoide	Parámetros adoptados en curva circular: Peralte (mm) V≤140km/h N=160	Peralte (mm) V≤140km/h E=160	Insuficiencia de peralte (mm) V≤140km/h N=115	Insuficiencia de peralte (mm) V≤140km/h E=115	Variación brusca insuf. de peralte (mm) Límite función de la velocidad	Exceso de peralte (mm) V≤140km/h N=80	Exceso de peralte (mm) V≤140km/h E=110	Aceleración sin compensar a_{sc} (m/s²) V≤140km/h N=0,65	Aceleración sin compensar a_{sc} (m/s²) V≤140km/h E=0,65	Parámetros adoptados en curva de transición clotoide: Rampa de peralte (mm/m) V≤140km/h N=1,15	Rampa de peralte (mm/m) V≤140km/h E=1,15	Rampa de peralte (mm/m) 140<V≤160 km/h N=1,00	Rampa de peralte (mm/m) 140<V≤160 km/h E=1,00	Variación peralte con el tiempo (mm/s) V≤140km/h N=45	Variación peralte con el tiempo (mm/s) V≤140km/h E=45	Variación insuficiencia peralte con el tiempo (mm/s) V≤140km/h N=35	Variación insuficiencia peralte con el tiempo (mm/s) V≤140km/h E=35	Variación aceleración sin compensar con el tiempo (m/s³) V≤140km/h N=0,20	Variación aceleración sin compensar con el tiempo (m/s³) V≤140km/h E=0,20
CIRC,	0+000,000	0+046,285	46,285	445	50	0	25	20		0		x		77 ≤ 110	0		0,43											
CLOT,	0+046,285	0+061,285	15		50	0			246,337																			
CIRC,	0+061,285	0+103,109	41,824	500	50	0	25	20		0		x		69 ≤ 110	0		0,39											
RECTA	0+103,109	0+138,173	35,064		50	0	25	20																				

EJE 17

CUADRO 5	VIA 2E IBERICO																									
	Alineación	PPKK		Longitud de alineación (m)	Radio (m)	Velocidad proyectada (km/h)		Longitud mínima de alineación por velocidad (m)		Parámetro de clotoide	Parámetros adoptados en curva circular							Parámetros adoptados en curva de transición clotoide							
											Peralte (mm)		Insuficiencia de peralte (mm)		Variación brusca insuf. de peralte (mm)	Exceso de peralte (mm)		Aceleración sin compensar a_{sc} (m/s^2)		Rampa de peralte (mm/m)				Variación peralte con el tiempo (mm/s)		Variación insuficiencia peralte con el tiempo (mm/s)		Variación aceleración sin compensar con el tiempo (m/s^3)	
											V≤140km/h		V≤140km/h		Límite función de la velocidad	V≤140km/h		V≤140km/h		V≤140km/h		140<V≤160 km/h		V≤140km/h		V≤140km/h		V≤140km/h	
		Inicial	Final			Máxima	Mínima	N=0,5xV	E=0,4xV		N=160	E=160	N=115	E=115		N=80	E=110	N=0,65	E=0,65	N=1,15	E=1,15	N=1,00	E=1,00	N=45	E=45	N=35	E=35	N=0,20	E=0,20
	RECTA	0+000,000	0+022,382	22,382		45	0	22,5	18																				
	CIRC,	0+022,382	0+096,130	73,749	-300	45	0				0		x		92 ≤ 110	0		0,52											
	RECTA	0+096,130	0+193,797	97,666		45	0																						

EJE 36

CUADRO 6	VIA 1E IBERICO																									
	Alineación	PPKK		Longitud de alineación (m)	Radio (m)	Velocidad proyectada (km/h)		Longitud mínima de alineación por velocidad (m)		Parámetro de clotoide	Parámetros adoptados en curva circular							Parámetros adoptados en curva de transición clotoide							
											Peralte (mm)		Insuficiencia de peralte (mm)		Variación brusca insuf. de peralte (mm)	Exceso de peralte (mm)		Aceleración sin compensar a_{sc} (m/s^2)		Rampa de peralte (mm/m)				Variación peralte con el tiempo (mm/s)		Variación insuficiencia peralte con el tiempo (mm/s)		Variación aceleración sin compensar con el tiempo (m/s^3)	
											V≤140km/h		V≤140km/h		Límite función de la velocidad	V≤140km/h		V≤140km/h		V≤140km/h		140<V≤160 km/h		V≤140km/h		V≤140km/h		V≤140km/h	
		Inicial	Final			Máxima	Mínima	N=0,5xV	E=0,4xV		N=160	E=160	N=115	E=115		N=80	E=110	N=0,65	E=0,65	N=1,15	E=1,15	N=1,00	E=1,00	N=45	E=45	N=35	E=35	N=0,20	E=0,20
	RECTA	0+000,000	0+107,256	107,256		45	0	22,5	18																				
	CIRC,	0+022,382	0+172,835	65,579	-300	45	0				0		x		92 ≤ 110	0		0,52											
	RECTA	0+096,130	0+213,115	40,279		45	0																						

EJE 78

CUADRO 7

VIA 8 TRES HERMANAS																										
Alineación	PPKK		Longitud de alineación (m)	Radio (m)	Velocidad proyectada (km/h)		Longitud mínima de alineación por velocidad (m)		Parámetro de clotoide	Parámetros adoptados en curva circular								Parámetros adoptados en curva de transición clotoide							
										Peralte (mm)		Insuficiencia de peralte (mm)		Variación brusca insuf. de peralte (mm)	Exceso de peralte (mm)		Aceleración sin compensar a_{sc} (m/s^2)		Rampa de peralte (mm/m)				Variación peralte con el tiempo (mm/s)		Variación insuficiencia peralte con el tiempo (mm/s)		Variación aceleración sin compensar con el tiempo (m/s^3)	
										V≤140km/h		V≤140km/h		Límite función de la velocidad	V≤140km/h		V≤140km/h		V≤140km/h		140<V≤160 km/h		V≤140km/h		V≤140km/h		V≤140km/h	
		Inicial	Final			Máxima	Mínima	N=0,5xV	E=0,4xV		N=160	E=160	N=115	E=115		N=80	E=110	N=0,65	E=0,65	N=1,15	E=1,15	N=1,00	E=1,00	N=45	E=45	N=35	E=35	N=0,20	E=0,20
RECTA	0+000,000	0+013,468	13,468		100	0																							
CLOT,	0+013,468	0+058,468	45		100	0			264,102											0,89		x		24,69		29,62		0,17	
CIRC,	0+058,468	0+129,447	70,979	-1550	100	0				40		48		x	40		0,27												
CLOT,	0+129,447	0+174,447	45		100	0			264,102											0,89		x		24,69		29,62		0,17	
RECTA	0+174,447	0+434,576	260,129		100	0	50	40																					
CLOT,	0+434,576	0+472,076	37,5		100	0			243,028											1,07		x		29,63		34,81		0,20	
CIRC,	0+472,076	0+527,622	55,546	-1575	100	0				40		47		x	40		0,27												
CLOT,	0+527,622	0+565,122	37,5		100	0			243,028											1,07		x		29,63		34,81		0,20	
RECTA	0+565,122	0+577,216	12,094		100	0																							

EJE 83

CUADRO 8

VIA 10 TRES HERMANAS																										
Alineación	PPKK		Longitud de alineación (m)	Radio (m)	Velocidad proyectada (km/h)		Longitud mínima de alineación por velocidad (m)		Parámetro de clotoide	Parámetros adoptados en curva circular								Parámetros adoptados en curva de transición clotoide							
										Peralte (mm)		Insuficiencia de peralte (mm)		Variación brusca insuf. de peralte (mm)	Exceso de peralte (mm)		Aceleración sin compensar a_{sc} (m/s^2)		Rampa de peralte (mm/m)				Variación peralte con el tiempo (mm/s)		Variación insuficiencia peralte con el tiempo (mm/s)		Variación aceleración sin compensar con el tiempo (m/s^3)	
										V≤140km/h		V≤140km/h		Límite función de la velocidad	V≤140km/h		V≤140km/h		V≤140km/h		140<V≤160 km/h		V≤140km/h		V≤140km/h		V≤140km/h	
		Inicial	Final			Máxima	Mínima	N=0,5xV	E=0,4xV		N=160	E=160	N=115	E=115		N=80	E=110	N=0,65	E=0,65	N=1,15	E=1,15	N=1,00	E=1,00	N=45	E=45	N=35	E=35	N=0,20	E=0,20
RECTA	0+000,000	0+070,312	70,312		70	0																							
CLOT,	0+070,312	0+090,312	20		70	0			154,919											1,00		x		19,44		35,00		0,19	
CIRC,	0+090,312	0+194,789	104,477	-1200	70	0				20		36		x	20		0,2												
CLOT,	0+194,789	0+214,789	20		70	0			154,919											1,00		x		19,44		35,00		0,19	
RECTA	0+214,789	0+560,743	345,954		70	0	35	28																					
CLOT,	0+560,743	0+580,743	20		70	0			154,919											1,00		x		19,44		35,00		0,19	
CIRC,	0+580,743	0+666,322	85,579	-1200	70	0				20		36		x	20		0,2												
CLOT,	0+666,322	0+686,322	20		70	0			154,919											1,00		x		19,44		35,00		0,19	
RECTA	0+686,322	0+748,311	61,989		70	0																							

EJE 87

CUADRO 9	RAMAL ANCHO MIXTO - COMPROBACIÓN ANCHO 1.668 mm -																									
	Alineación	PPKK		Longitud de alineación (m)	Radio (m)	Velocidad proyectada (km/h)		Longitud mínima de alineación por velocidad (m)		Parámetro de clotoide	Parámetros adoptados en curva circular								Parámetros adoptados en curva de transición clotoide							
											Peralte (mm)		Insuficiencia de peralte (mm)		Variación brusca insuf. de peralte (mm)	Exceso de peralte (mm)		Aceleración sin compensar a_{sc} (m/s^2)		Rampa de peralte (mm/m)				Variación peralte con el tiempo (mm/s)		Variación insuficiencia peralte con el tiempo (mm/s)		Variación aceleración sin compensar con el tiempo (m/s^3)	
											V≤140km/h		V≤140km/h		Límite función de la velocidad	V≤140km/h		V≤140km/h		V≤140km/h		140<V≤160 km/h		V≤140km/h		V≤140km/h		V≤140km/h	
		Inicial	Final			Máxima	Mínima	N=0,5xV	E=0,4xV		N=160	E=160	N=115	E=115		N=80	E=110	N=0,65	E=0,65	N=1,15	E=1,15	N=1,00	E=1,00	N=45	E=45	N=35	E=35	N=0,20	E=0,20
	RECTA	0+000,000	0+012,537	12,537		40	0	20	16																				
	CLOT,	0+012,537	0+043,429	30,893		40	0	20	16	81,118										0,81		x		8,99		29,05		0,16	
	CIRC,	0+043,429	0+063,044	19,615	213	40	0	20	16		25		78		x	25		0,44											

PLANTA ANCHO 1.435 MM

EJE 74

VIA 1 UIC																												
Alineación	PPKK		Longitud de alineación (m)	Radio (m)	Velocidad proyectada (km/h)		Longitud mínima de alineación por velocidad (m)				Parámetro de clotoide	Parámetros adoptados en curva circular										Parámetros adoptados en curva de transición clotoide							
												Peralte (mm)		Insuficiencia de peralte (mm)				Variación brusca insuf. de peralte (mm)	Exceso de peralte (mm)		Aceleración sin compensar a_{sc} (m/s²)			Rampa de peralte (mm/m)				Variación peralte con el tiempo (mm/s)		Variación insuficiencia peralte con el tiempo (mm/s)		Variación aceleración sin compensar con el tiempo (m/s³)	
							V≤140km/h		140≤V<200 km/h					V≤140km/h		140≤V<200 km/h		Límite función de la velocidad	V≤140km/h		V≤140km/h		140≤V<200 km/h			140≤V<200 km/h		V≤140km/h		V≤140km/h		V≤140km/h	
	Inicial	Final			Máxima	Mínima	N=V/3	E=V/4	N=V/2	E=V/3		N=140	E=160	N=100	E=130	N=100	E=150		N=80	E=110	N=0,65	E=0,85	N=0,65	E=0,98	N=0,8	E=2	N=0,8	E=1,00	N=30	E=50	N=30	E=55	N=0,20	E=0,36
	RECTA	174+874,848	174+936,011	61,163		160	0	x	x	80	53,33																							
	CIRC,	174+936,011	175+016,965	80,954	650000	160	0	x	x	80	53,33		0	x		x		0	0		x		0										
	RECTA	175+016,965	175+540,553	523,588		160	0	x	x	80	53,33																							
	CIRC,	175+540,553	175+624,339	83,786	-330000	160	0	x	x	80	53,33		0	x		x		1 ≤ 125	0		x		0,01										
	CIRC,	175+624,339	175+767,955	143,617	500000	160	0	x	x	80	53,33		0	x		x		1 ≤ 125	0		x		0										
	RECTA	175+767,955	176+063,188	295,233		160	0	x	x	80	53,33																							
	CIRC,	176+063,188	176+221,683	158,495	-500000	160	0	x	x	80	53,33		0	x		x		1 ≤ 125	0		x		0										
	RECTA	176+221,683	176+597,922	376,239		160	0	x	x	80	53,33																							
	CIRC,	176+597,922	176+687,719	89,798	-150000	160	0	x	x	80	53,33		0	x		x		2 ≤ 125	0		x		0,01										
	CIRC,	176+687,719	176+782,756	95,037	150000	160	0	x	x	80	53,33		0	x		x		2 ≤ 125	0		x		0,01										
	RECTA	176+782,756	177+399,144	616,388		160	0	x	x	80	53,33																							
	CIRC,	177+399,144	177+477,831	78,687	-300000	160	0	x	x	80	53,33		0	x		x		1 ≤ 125	0		x		0,01										
	CIRC,	177+477,831	177+533,229	55,398	370000	160	0	x	x	80	53,33		0	x		x		1 ≤ 125	0		x		0,01										
	RECTA	177+533,229	177+959,290	426,061		160	0	x	x	80	53,33																							
	CIRC,	177+959,290	178+041,335	82,046	100000	160	0	x	x	80	53,33		0	x		x		3 ≤ 125	0		x		0,02										
	CIRC,	178+041,335	178+126,050	84,714	-100000	160	0	x	x	80	53,33		0	x		x		3 ≤ 125	0		x		0,02										
	RECTA	178+126,050	178+209,392	83,342		160	0	x	x	80	53,33																							
	CIRC,	178+209,392	178+265,722	56,33	-40000	160	0	x	x	80	53,33		0	x		x		8 ≤ 125	0		x		0,05										
	CIRC,	178+265,722	178+328,738	63,016	40000	160	0	x	x	80	53,33		0	x		x		8 ≤ 125	0		x		0,05										
	RECTA	178+328,738	178+487,826	159,088		160	0	x	x	80	53,33																							
	CLOT,	178+487,826	178+638,458	150,632		80	0					269,732												0,46	x	10,33	12,69	0,08						
CUADRO 19	CIRC,	178+638,458	178+874,900	236,442	483	80	0	26,67	20	x	x		70	86		x		x	70		0,56		x										
	CLOT,	178+874,900	178+884,900	10		80	0					237,827												0,50	x	11,11	11,11	0,11						
	CIRC,	178+884,900	178+911,433	26,534	445	80	0	26,67	20	x	x		75	95		x		x	75		0,61		x										
	CLOT,	178+911,433	178+936,433	25		80	0					221,826												0,60	x	13,33	3,56	0,13						
	CIRC,	178+936,433	178+957,211	20,777	575	80	0	26,67	20	x	x		60	71		x		x	71		0,46		x										
	CLOT,	178+957,211	178+987,211	30		80	0					131,339												2,00	x	44,44	52,59	0,34						
	RECTA	178+987,211	180+058,084	1070,874		80	0	26,67	20	x	x																							
	CLOT,	180+058,084	180+078,084	20		80	0					189,737											x	0,75	x	16,67	30,00	0,20						
	CIRC,	180+078,084	180+126,948	48,864	1800	80	0	26,67	20	x	x		15	27		x		x	15		0,18												
	CLOT,	180+126,948	180+146,948	20		80	0					189,737											x	0,75	x	16,67	30,00	0,20						
	CLOT,	180+146,948	180+166,948	20		80	0					134,164												1,75	x	38,89	53,33	0,36						
	CIRC,	180+166,948	180+260,521	93,573	-900	80	0	26,67	20	x	x		35	48		x		x	35		0,32		x										
	CLOT,	180+260,521	180+280,521	20		80	0					444,972												0,00	x	0,00	7,78	0,06						
	CIRC,	180+280,521	180+408,989	128,468	-990	80	0	26,67	20	x	x		35	41		x		x	35		0,27		x										
	CLOT,	180+408,989	180+458,989	50		80	0					1382,281												0,10	x	2,22	3,11	0,02						
	CIRC,	180+458,989	180+578,349	119,36	-965	80	0	26,67	20	x	x		30	48		x		x	30		0,31		x										
	CLOT,	180+578,349	180+638,349	60		80	0					3351,507												0,00	x	0,00	0,00	0,00						
	CIRC,	180+638,349	180+786,484	148,136	-970	80	0	26,67	20	x	x		30	48		x		x	30		0,31		x										
	CLOT,	180+786,484	180+876,484	90		80	0					295,466												0,33	x	7,40	11,85	0,08						
	RECTA	180+876,484	181+003,419	126,935		130	0	x	x	65	32,5																							
	CLOT,	181+003,419	181+013,419	10		130	0					974,679												x	0,00	0,00	7,22	0,04						
	CIRC,	181+013,419	181+055,660	42,241	95000	130	0	x	x	65	32,5		0	x		2		x	0		x		0,01										
	CLOT,	181+055,660	181+065,660	10		130	0					974,679												x	0,00	0,00	7,22	0,04						
	RECTA	181+065,660	181+150,843	85,182		130	0	x	x	65	32,5																							

EJE 74

VIA 1 UIC																															
Alineación	PPKK		Longitud de alineación (m)	Radio (m)	Velocidad proyectada (km/h)		Longitud mínima de alineación por velocidad (m)				Parámetro de clotoide	Parámetros adoptados en curva circular													Parámetros adoptados en curva de transición clotoide							
												Peralte (mm)		Insuficiencia de peralte (mm)				Variación brusca insuf. de peralte (mm)	Exceso de peralte (mm)		Aceleración sin compensar a_{sc} (m/s²)				Rampa de peralte (mm/m)				Variación peralte con el tiempo (mm/s)		Variación insuficiencia peralte con el tiempo (mm/s)		Variación aceleración sin compensar con el tiempo (m/s³)	
							V≤140km/h		140≤V<200 km/h					V≤140km/h		140≤V<200 km/h		Límite función de la velocidad	V≤140km/h		V≤140km/h		140≤V<200 km/h		V≤140km/h		140≤V<200 km/h		V≤140km/h		V≤140km/h		V≤140km/h	
	Inicial	Final			Máxima	Mínima	N=V/3	E=V/4	N=V/2	E=V/3		N=140	E=160	N=100	E=130	N=100	E=150		N=80	E=110	N=0,65	E=0,85	N=0,65	E=0,98	N=0,8	E=2	N=0,8	E=1,00	N=30	E=50	N=30	E=55	N=0,20	E=0,36
CLOT,	181+150,843	181+170,843	20		130	0					1886,796														x	0,00	0,00	1,81	0,02				
CIRC,	181+170,843	181+210,124	39,281	-178000	130	0	x	x	65	32,5		0		x		1		x	0		x		0,01										
CLOT,	181+210,124	181+230,124	20		130	0					1886,796														x	0,00	0,00	1,81	0,02				
RECTA	181+230,124	181+274,167	44,043		130	0	x	x	65	32,5																							
CLOT,	181+274,167	181+324,167	50		160	0					8366,6														x	0,00	0,00	0,00	0,00				
CIRC,	181+324,167	182+125,309	801,143	1400000	160	0	x	x	80	53,33		0		x		0		x	0		x		0										
CLOT,	182+125,309	182+175,309	50		160	0					8366,6														x	0,00	0,00	0,00	0,00				
RECTA	182+175,309	182+498,166	322,857		160	0	x	x	80	53,33																							
CLOT,	182+498,166	182+523,166	25		160	0					1936,492														x	0,00	0,00	3,56	0,02				
CIRC,	182+523,166	182+645,330	122,164	-150000	160	0	x	x	80	53,33		0		x		2		x	0		x		0,01										
CLOT,	182+645,330	182+670,330	25		160	0					1936,492														x	0,00	0,00	3,56	0,02				
CLOT,	182+670,330	182+695,330	25		160	0					1968,502														x	0,00	0,00	3,56	0,02				
CIRC,	182+695,330	182+787,571	92,241	155000	160	0	x	x	80	53,33		0		x		2		x	0		x		0,01										
CLOT,	182+787,571	182+812,571	25		160	0					1968,502														x	0,00	0,00	3,56	0,02				
RECTA	182+812,571	183+400,624	588,053		160	0	x	x	80	53,33																							
CLOT,	183+400,624	183+440,624	40		160	0					6324,555														x	0,00	0,00	0,00	0,00				
CIRC,	183+440,624	183+600,037	159,413	1000000	160	0	x	x	80	53,33		0		x		0		x	0		x		0										
CLOT,	183+600,037	183+640,037	40		160	0					6324,555														x	0,00	0,00	0,00	0,00				
RECTA	183+640,037	183+813,543	173,506		160	0	x	x	80	53,33																							
CLOT,	183+813,543	183+863,543	50		160	0					1024,695														x	0,1	4,44	8	0,05				
CIRC,	183+863,543	184+079,449	215,906	21000	160	0	x	x	80	53,33		5		x		9		x	5		x		0,06										
CLOT,	184+079,449	184+129,449	50		160	0					1024,695														x	0,1	4,44	8	0,05				
CLOT,	184+129,449	184+179,449	50		160	0					1024,695														x	0,1	4,44	8	0,05				
CIRC,	184+179,449	184+395,355	215,906	-21000	160	0	x	x	80	53,33		5		x		9		x	5		x		0,06										
CLOT,	184+395,355	184+445,355	50		160	0					1024,695														x	0,1	4,44	8	0,05				
RECTA	184+445,355	184+805,932	360,577		160	0	x	x	80	53,33																							
CLOT,	184+805,932	184+835,932	30		160	0					6708,204														x	0,00	0,00	0,00	0,00				
CIRC,	184+835,932	184+967,456	131,525	-1500000	160	0	x	x	80	53,33		0		x		0		x	0		x		0										
CLOT,	184+967,456	184+997,456	30		160	0					6708,204														x	0,00	0,00	0,00	0,00				
RECTA	184+997,456	186+175,899	1178,442		160	0	x	x	80	53,33																							
CIRC,	186+175,899	186+296,020	120,121	600000	160	0	x	x	80	53,33		0		x		x		1 ≤ 125	0		x		0										
RECTA	186+296,020	187+545,748	1249,728		160	0	x	x	80	53,33																							
CLOT,	187+545,748	187+750,748	205		160	0					802,986														x	0,24	10,84	9,97	0,07				
CIRC,	187+750,748	187+755,982	5,234	3145,3	160	0	x	x	80	53,33		50		x		46		x	50		x		0,3										

EJE 2

VIA 2 UIC

	Alineación	PPKK		Longitud de alineación (m)	Radio (m)	Velocidad proyectada (km/h)		Longitud mínima de alineación por velocidad (m)				Parámetro de clotoide	Parámetros adoptados en curva circular												Parámetros adoptados en curva de transición clotoide							
													Peralte (mm)		Insuficiencia de peralte (mm)				Variación brusca insuf. de peralte (mm)	Exceso de peralte (mm)		Aceleración sin compensar a_{sc} (m/s²)			Rampa de peralte (mm/m)				Variación peralte con el tiempo (mm/s)		Variación insuficiencia peralte con el tiempo (mm/s)		Variación aceleración sin compensar con el tiempo (m/s³)	
								V≤140km/h		140≤V<200 km/h					V≤140km/h		140≤V<200 km/h		Límite función de la velocidad	V≤140km/h		V≤140km/h		140≤V<200 km/h		V≤140km/h	140≤V<200 km/h		V≤140km/h		V≤140km/h		V≤140km/h	
		Inicial	Final			Máxima	Mínima	N=V/3	E=V/4	N=V/2	E=V/3		N=140	E=160	N=100	E=130	N=100	E=150		N=80	E=110	N=0,65	E=0,85	N=0,65	E=0,98	N=0,8	E=2	N=0,8	E=1,00	N=30	E=50	N=30	E=55	N=0,20	E=0,36
CUADRO 20	RECTA	174+876,679	176+861,973	1985,294		160	0	x	x	80	53,33																							
	CLOT,	176+861,973	176+901,973	40		160	0					774,597															0,25	11,11	11,11	0,08		
	CIRC,	176+901,973	176+990,296	88,323	-15000	160	0	x	x	80	53,33		10		x		10		x	10		x		0,07		x						
	CLOT,	176+990,296	177+030,296	40		160	0					774,597															0,25	11,11	11,11	0,08		
	CLOT,	177+030,296	177+070,296	40		160	0					774,597															0,25	11,11	11,11	0,08		
	CIRC,	177+070,296	177+154,495	84,199	15000	160	0	x	x	80	53,33		10		x		10		x	10		x		0,07		x						
	CLOT,	177+154,495	177+194,495	40		160	0					774,597															0,25	11,11	11,11	0,08		
	RECTA	177+194,495	177+591,449	396,954		160	0	x	x	80	53,33																					
	CLOT,	177+591,449	177+631,449	40		160	0					632,456														x	0,38	16,67	16,67	0,11		
	CIRC,	177+631,449	177+719,054	87,605	10000	160	0	x	x	80	53,33		15		x		15		x	15		x		0,1								
	CLOT,	177+719,054	177+759,054	40		160	0					632,456														x	0,38	16,67	16,67	0,11		
	CLOT,	177+759,054	177+796,409	37,355		140	0					333,128														0,80	x	31,23	49,97	0,83		
	CIRC,	177+796,409	177+796,409	0	-2970,8	140	0	46,67	35	x	x		30		48		x		x	30		0,31		x								
	CLOT,	177+796,409	177+833,764	37,355		140	0					333,128														0,80	x	31,23	49,97	0,83		
	RECTA	177+833,764	178+475,541	641,777		140	0	46,67	35	x	x																					
	CLOT,	178+475,541	178+654,977	179,436		80	0					294,393														0,39	x	8,67	10,65	0,00		
	CIRC,	178+654,977	178+950,945	295,968	483	80	0	26,67	20	x	x		70		86		x		x	70		0,56		x								
	CLOT,	178+950,945	178+989,780	38,835		80	0					136,958														1,80	x	40,06	49,21	0,32		
	RECTA	178+989,780	180+109,815	1120,035		80	0	26,67	20	x	x																					
	CLOT,	180+109,815	180+119,815	10		80	0					360,555														0,00	x	0,00	13,33	0,09		
	CIRC,	180+119,815	180+172,944	53,129	13000	80	0	26,67	20	x	x		0		6		x		x	6		0,04		x								
	CLOT,	180+172,944	180+182,944	10		80	0					360,555														0,00	x	0,00	13,33	0,09		
	CLOT,	180+182,944	180+202,944	20		80	0					133,679														1,75	x	38,89	54,44	0,36		
	CIRC,	180+202,944	180+265,350	62,406	-893,5	80	0	26,67	20	x	x		35		49		x		x	35		0,32		x								
	CLOT,	180+265,350	180+285,350	20		80	0					441,904														0,25	x	5,56	2,22	0,02		
	CIRC,	180+285,350	180+413,719	128,369	-983,5	80	0	26,67	20	x	x		30		47		x		x	30		0,3		x								
	CLOT,	180+413,719	180+463,719	50		80	0					1373,088														0,00	x	0,00	0,89	0,01		
	CIRC,	180+463,719	180+666,802	203,083	-958,5	80	0	26,67	20	x	x		30		49		x		x	30		0,32		x								
	CLOT,	180+666,802	180+726,802	60		80	0					3328,99														0,00	x	0,00	0,37	0,00		
	CIRC,	180+726,802	180+782,688	55,886	-963,5	80	0	26,67	20	x	x		30		48		x		x	30		0,31		x								
	CLOT,	180+782,688	180+882,688	100		80	0					310,403														0,30	x	6,67	10,67	0,07		
	RECTA	180+882,688	180+954,064	71,376		120	0	40	30	x	x																					
	CLOT,	180+954,064	180+964,064	10		120	0					612,372														0,00	x	0,00	16,67	0,10		
	CIRC,	180+964,064	181+018,312	54,248	37500	120	0	40	30	x	x		0		5		x		x	0		0,03		x								
	CLOT,	181+018,312	181+028,312	10		120	0					612,372														0,00	x	0,00	16,67	0,10		
	RECTA	181+028,312	181+083,274	54,962		120	0	40	30	x	x																					
	CLOT,	181+083,274	181+110,774	27,5		120	0					262,202														1,09	x	36,36	46,06	0,30		
	CIRC,	181+110,774	181+144,641	33,868	2500	120	0	40	30	x	x		30		38		x		x	30		0,25		x								
	CLOT,	181+144,641	181+172,141	27,5		120	0					262,202														1,09	x	36,36	46,06	0,30		
	CLOT,	181+172,141	181+199,641	27,5		120	0					256,905														1,09	x	36,36	49,69	0,32		
	CIRC,	181+199,641	181+241,338	41,696	-2400	120	0	40	30	x	x		30		41		x		x	30		0,26		x								
	CLOT,	181+241,338	181+268,838	27,5		120	0					256,905														1,09	x	36,36	49,69	0,32		
	RECTA	181+268,838	181+314,512	45,674		140	0	46,67	35	x	x																					
	CLOT,	181+314,512	181+339,512	25		140	0					344,601														1,00	x	38,89	37,33	0,23		
	CIRC,	181+339,512	181+389,340	49,828	-4750	140	0	46,67	35	x	x		25		24		x		x	25		0,15		x								

EJE 2

VIA 2 UIC

Alineación	PPKK		Longitud de alineación (m)	Radio (m)	Velocidad proyectada (km/h)		Longitud mínima de alineación por velocidad (m)				Parámetro de clotoide	Parámetros adoptados en curva circular										Parámetros adoptados en curva de transición clotoide				
												Peralte (mm)		Insuficiencia de peralte (mm)				Variación brusca insuf. de peralte (mm)	Exceso de peralte (mm)		Aceleración sin compensar a_{sc} (m/s²)			Rampa de peralte (mm/m)		Variación peralte con el tiempo (mm/s)	Variación insuficiencia peralte con el tiempo (mm/s)	Variación aceleración sin compensar con el tiempo (m/s³)
							V≤140km/h		140≤V<200 km/h					V≤140km/h		140≤V<200 km/h		Límite función de la velocidad	V≤140km/h		V≤140km/h		140≤V<200 km/h		V≤140km/h	140≤V<200 km/h	V≤140km/h	V≤140km/h	V≤140km/h
	Inicial	Final			Máxima	Mínima	N=V/3	E=V/4	N=V/2	E=V/3		N=140	E=160	N=100	E=130	N=100	E=150		N=80	E=110	N=0,65	E=0,85	N=0,65	E=0,98	N=0,8	E=2	N=0,8	E=1,00	N=30	E=50	N=30	E=55	N=0,20	E=0,36
CLOT,	181+389,340	181+414,340	25		140	0					344,601													1,00	x	38,89	37,33	0,23
CLOT,	181+414,340	181+434,340	20		140	0					346,41													1,00	x	38,89	36,94	0,23
CIRC,	181+434,340	181+511,597	77,257	6000	140	0	46,67	35	x	x		20		19		x		x	20		0,12		x					
CLOT,	181+511,597	181+561,597	50		140	0					548,9													0,40	x	15,56	14,78	0,09
CIRC,	181+561,597	182+127,873	566,276	1400000	140	0	46,67	35	x	x		0		0		x		x	0		0		x					
CLOT,	182+127,873	182+177,873	50		140	0					8366,6													0,00	x	0,00	0,00	0,00
RECTA	182+177,873	182+499,833	321,959		160	0	x	x	80	53,33																		
CLOT,	182+499,833	182+524,833	25		160	0					1936,492													x	0,00	0,00	3,56	0,02
CIRC,	182+524,833	182+646,997	122,164	-150000	160	0	x	x	80	53,33		0		x		2		x	0		x		0,01					
CLOT,	182+646,997	182+671,997	25		160	0					1936,492													x	0,00	0,00	3,56	0,02
CLOT,	182+671,997	182+696,997	25		160	0					1968,502													x	0,00	0,00	3,56	0,02
CIRC,	182+696,997	182+789,238	92,241	155000	160	0	x	x	80	53,33		0		x		2		x	0		x		0,01					
CLOT,	182+789,238	182+814,238	25		160	0					1968,502													x	0,00	0,00	3,56	0,02
RECTA	182+814,238	183+402,293	588,055		160	0	x	x	80	53,33																		
CLOT,	183+402,293	183+442,293	40		160	0					6324,555													x	0,00	0,00	0,00	0,00
CIRC,	183+442,293	183+601,700	159,407	1000000	160	0	x	x	80	53,33		0		x		0		x	0		x		0					
CLOT,	183+601,700	183+641,700	40		160	0					6324,555													x	0,00	0,00	0,00	0,00
RECTA	183+641,700	183+809,288	167,588		160	0	x	x	80	53,33																		
CLOT,	183+809,288	183+879,288	70		160	0					935,414													x	0,14	6,35	8,89	0,06
CIRC,	183+879,288	184+061,478	182,19	12500	160	0	x	x	80	53,33		10		x		14		x	10		x		0,09					
CLOT,	184+061,478	184+131,478	70		160	0					935,414													x	0,14	6,35	8,89	0,06
CLOT,	184+131,478	184+201,478	70		160	0					935,414													x	0,14	6,35	8,89	0,06
CIRC,	184+201,478	184+383,668	182,19	-12500	160	0	x	x	80	53,33		10		x		14		x	10		x		0,09					
CLOT,	184+383,668	184+453,668	70		160	0					935,414													x	0,14	6,35	8,89	0,06
RECTA	184+453,668	184+807,630	353,962		160	0	x	x	80	53,33																		
CLOT,	184+807,630	184+837,630	30		160	0					6708,204													x	0,00	0,00	0,00	0,00
CIRC,	184+837,630	184+969,155	131,525	-1500000	160	0	x	x	80	53,33		0		x		0		x	0		x		0					
CLOT,	184+969,155	184+999,155	30		160	0					6708,204													x	0,00	0,00	0,00	0,00
RECTA	184+999,155	186+177,597	1178,442		160	0	x	x	80	53,33																		
CIRC,	186+177,597	186+297,719	120,121	600000	160	0	x	x	80	53,33		0		x		x		1 ≤ 92	0		x		0					
RECTA	186+297,719	187+552,821	1255,103		160	0	x	x	80	53,33																		
CLOT,	187+552,821	187+757,821	205		160	0					803,586													x	0,24	10,84	9,97	0,07
CIRC,	187+757,821	187+757,821	0	3150	160	0	x	x	80	53,33		50		x		46		x	50		x		0,3					

EJE 39

CUADRO 21	VIA 3 UIC																							
	Alineación	PPKK		Longitud de alineación (m)	Radio (m)	Velocidad proyectada (km/h)		Longitud mínima de alineación por velocidad (m)		Parámetro de clotoide	Parámetros adoptados en curva circular								Parámetros adoptados en curva de transición clotoide					
											Peralte (mm)		Insuficiencia de peralte (mm)		Variación brusca insuf. de peralte (mm)	Exceso de peralte (mm)		Aceleración sin compensar a_{sc} (m/s^2)		Rampa de peralte (mm/m)		Variación peralte con el tiempo (mm/s)		Variación insuficiencia peralte con el tiempo (mm/s)		Variación aceleración sin compensar con el tiempo (m/s³)	
								V≤140km/h					V≤140km/h		Límite función de la velocidad	V≤140km/h		V≤140km/h		V≤140km/h		V≤140km/h		V≤140km/h		V≤140km/h	
		Inicial	Final			Máxima	Mínima	N=V/3	E=V/4		N=140	E=160	N=100	E=130		N=80	E=110	N=0,65	E=0,85	N=0,8	E=2	N=30	E=50	N=30	E=55	N=0,20	E=0,36
	RECTA	0+000,000	0+080,628	80,628		50	0	16,67	12,5																		
	CIRC,	0+080,628	0+162,796	82,167	-750	50	0	16,67	12,5		0		x		39 ≤ 130	0		0,26									
	RECTA	0+162,796	0+606,618	443,823		50	0	16,67	12,5																		
	CIRC,	0+606,618	0+630,522	23,903	-1000	50	0	16,67	12,5		0		x		30 ≤ 130	0		0,19									
	RECTA	0+630,522	0+676,201	45,679		50	0	16,67	12,5																		
	CIRC,	0+676,201	0+761,858	85,658	-1000	50	0	16,67	12,5		0		x		30 ≤ 130	0		0,19									
	RECTA	0+761,858	0+782,224	20,366		50	0	16,67	12,5																		

EJE 35

CUADRO 22	VIA 4 UIC																							
	Alineación	PPKK		Longitud de alineación (m)	Radio (m)	Velocidad proyectada (km/h)		Longitud mínima de alineación por velocidad (m)		Parámetro de clotoide	Parámetros adoptados en curva circular								Parámetros adoptados en curva de transición clotoide					
											Peralte (mm)		Insuficiencia de peralte (mm)		Variación brusca insuf. de peralte (mm)	Exceso de peralte (mm)		Aceleración sin compensar a_{sc} (m/s^2)		Rampa de peralte (mm/m)		Variación peralte con el tiempo (mm/s)		Variación insuficiencia peralte con el tiempo (mm/s)		Variación aceleración sin compensar con el tiempo (m/s³)	
								V≤140km/h					V≤140km/h		Límite función de la velocidad	V≤140km/h		V≤140km/h		V≤140km/h		V≤140km/h		V≤140km/h		V≤140km/h	
		Inicial	Final			Máxima	Mínima	N=V/3	E=V/4		N=140	E=160	N=100	E=130		N=80	E=110	N=0,65	E=0,85	N=0,8	E=2	N=30	E=50	N=30	E=55	N=0,20	E=0,36
	RECTA	0+000,000	0+080,615	80,615		50	0	16,67	12,5																		
	CIRC,	0+80,615	0+162,752	82,137	-750	50	0	16,67	12,5		0		x		39 ≤ 130	0		0,26									
	RECTA	0+162,752	0+605,949	443,198		50	0	16,67	12,5																		
	CIRC,	0+605,949	0+629,895	23,945	-1000	50	0	16,67	12,5		0		x		30 ≤ 130	0		0,19									
	RECTA	0+629,895	0+676,468	46,573		50	0	16,67	12,5																		
	CIRC,	0+676,468	0+762,125	85,657	-1000	50	0	16,67	12,5		0		x		30 ≤ 130	0		0,19									
	RECTA	0+762,125	0+786,380	24,255		50	0	16,67	12,5																		
	CIRC,	0+786,380	0+814,865	28,485	260	50	0	16,67	12,5		0		x		113 ≤ 130	0		0,74									
	RECTA	0+814,865	0+879,370	64,504		50	0	16,67	12,5																		
	CIRC,	0+879,370	0+911,142	31,772	-290	50	0	16,67	12,5		0		x		102 ≤ 130	0		0,66									
	RECTA	0+911,142	0+913,629	2,487 (*)		50	0	16,67	12,5																		

EJE 38

CUADRO 23

VIA 5 UIC																								
Alineación	PPKK		Longitud de alineación (m)	Radio (m)	Velocidad proyectada (km/h)		Longitud mínima de alineación por velocidad (m)		Parámetro de clotoide	Parámetros adoptados en curva circular								Parámetros adoptados en curva de transición clotoide						
										Peralte (mm)		Insuficiencia de peralte (mm)		Variación brusca insuf. de peralte (mm)	Exceso de peralte (mm)		Aceleración sin compensar a_{sc} (m/s²)		Rampa de peralte (mm/m)		Variación peralte con el tiempo (mm/s)		Variación insuficiencia peralte con el tiempo (mm/s)		Variación aceleración sin compensar con el tiempo (m/s³)	
							V≤140km/h					V≤140km/h		Límite función de la velocidad	V≤140km/h		V≤140km/h		V≤140km/h		V≤140km/h		V≤140km/h		V≤140km/h	
	Inicial	Final			Máxima	Mínima	N=V/3	E=V/4		N=140	E=160	N=100	E=130		N=80	E=110	N=0,65	E=0,85	N=0,8	E=2	N=30	E=50	N=30	E=55	N=0,20	E=0,36
RECTA	0+000,000	0+025,103	25,103		50	0	16,67	12,5																		
CIRC,	0+025,103	0+134,663	109,559	-500	50	0	16,67	12,5		0		x		59 ≤ 130	0		0,38									
RECTA	0+134,663	0+573,089	438,426		50	0	16,67	12,5																		
CIRC,	0+573,089	0+651,594	78,506	-600	50	0	16,67	12,5		0		x		49 ≤ 130	0		0,32									
RECTA	0+651,594	0+748,560	96,966		50	0	16,67	12,5																		
CIRC,	0+748,560	0+766,650	18,09	850	50	0	16,67	12,5		0		x		35 ≤ 130	0		0,23									
RECTA	0+766,650	0+772,753	6,103		50	0	16,67	12,5																		

EJE 63

CUADRO 24

VIA M1 UIC																								
Alineación	PPKK		Longitud de alineación (m)	Radio (m)	Velocidad proyectada (km/h)		Longitud mínima de alineación por velocidad (m)		Parámetro de clotoide	Parámetros adoptados en curva circular								Parámetros adoptados en curva de transición clotoide						
										Peralte (mm)		Insuficiencia de peralte (mm)		Variación brusca insuf. de peralte (mm)	Exceso de peralte (mm)		Aceleración sin compensar a_{sc} (m/s²)		Rampa de peralte (mm/m)		Variación peralte con el tiempo (mm/s)		Variación insuficiencia peralte con el tiempo (mm/s)		Variación aceleración sin compensar con el tiempo (m/s³)	
							V≤140km/h					V≤140km/h		Límite función de la velocidad	V≤140km/h		V≤140km/h		V≤140km/h		V≤140km/h		V≤140km/h		V≤140km/h	
	Inicial	Final			Máxima	Mínima	N=V/3	E=V/4		N=140	E=160	N=100	E=130		N=80	E=110	N=0,65	E=0,85	N=0,8	E=2	N=30	E=50	N=30	E=55	N=0,20	E=0,36
RECTA	0+000,000	0+084,994	84,994		50	0	16,67	12,5																		
CIRC,	0+084,994	0+119,016	34,022	-315	50	0	16,67	12,5		0		x		94 ≤ 130	0		0,61									
RECTA	0+119,016	0+357,761	238,746		50	0	16,67	12,5																		

EJE 62

CUADRO 25

VIA M2 UIC																								
Alineación	PPKK		Longitud de alineación (m)	Radio (m)	Velocidad proyectada (km/h)		Longitud mínima de alineación por velocidad (m)		Parámetro de clotoide	Parámetros adoptados en curva circular								Parámetros adoptados en curva de transición clotoide							
										Peralte (mm)		Insuficiencia de peralte (mm)		Variación brusca insuf. de peralte (mm)	Exceso de peralte (mm)		Aceleración sin compensar a_{sc} (m/s²)		Rampa de peralte (mm/m)		Variación peralte con el tiempo (mm/s)		Variación insuficiencia peralte con el tiempo (mm/s)		Variación aceleración sin compensar con el tiempo (m/s³)	
							V≤140km/h					V≤140km/h		Límite función de la velocidad	V≤140km/h		V≤140km/h		V≤140km/h		V≤140km/h		V≤140km/h		V≤140km/h	
	Inicial	Final			Máxima	Mínima	N=V/3	E=V/4		N=140	E=160	N=100	E=130		N=80	E=110	N=0,65	E=0,85	N=0,8	E=2	N=30	E=50	N=30	E=55	N=0,20	E=0,36
RECTA	0+000,000	0+026,767	26,767		50	0	16,67	12,5																		
CIRC,	0+026,767	0+061,215	34,448	25000	50	0	16,67	12,5		0		x		1 ≤ 130	0		0,01									
RECTA	0+061,215	0+272,694	211,479		50	0	16,67	12,5																		

EJE 89

CUADRO 26

RAMAL ANCHO MIXTO - COMPROBACIÓN ANCHO 1.435 mm -																								
Alineación	PPKK		Longitud de alineación (m)	Radio (m)	Velocidad proyectada (km/h)		Longitud mínima de alineación por velocidad (m)		Parámetro de clotoide	Parámetros adoptados en curva circular								Parámetros adoptados en curva de transición clotoide							
										Peralte (mm)		Insuficiencia de peralte (mm)		Variación brusca insuf. de peralte (mm)	Exceso de peralte (mm)		Aceleración sin compensar a_{sc} (m/s²)		Rampa de peralte (mm/m)		Variación peralte con el tiempo (mm/s)		Variación insuficiencia peralte con el tiempo (mm/s)		Variación aceleración sin compensar con el tiempo (m/s³)	
							V≤140km/h					V≤140km/h		Límite función de la velocidad	V≤140km/h		V≤140km/h		V≤140km/h		V≤140km/h		V≤140km/h		V≤140km/h	
	Inicial	Final			Máxima	Mínima	N=V/3	E=V/4		N=140	E=160	N=100	E=130		N=80	E=110	N=0,65	E=0,85	N=0,8	E=2	N=30	E=50	N=30	E=55	N=0,20	E=0,36
RECTA	0+000,000	0+012,537	12,537		40	0	13,33	10																		
CLOT,	0+012,537	0+043,429	30,893		40	0	13,33	10	81,118																	
CIRC,	0+043,429	0+063,044	19,615	213	40	0	13,33	10		25		78		x	25		0,44									

ALZADO ANCHO 1.668 MM

EJE 77

VIA 1 - VIA 6 IBERICO														
Alineación	Tangente de entrada		Tangente de salida		Pendiente (‰)		Acuerdo vertical (m)		Longitud de alineación (m)	Velocidad por planta (km/h)	Aceleración vertical en acuerdo por velocidad (m/s²)		Longitud mínima de alineación por velocidad (m/s²)	
	PPKK	Z(m)	PPKK	Z(m)	N=12,5	E=15	Concavos=2.000	Convexos E=3.000			N=0,3	E=0,45	N=0,5xV	E=0,4xV
Rasante	243+513,731	695,721	244+088,861	692,505	-5,59				575,130	160			80	64
Acuerdo	244+088,861	692,505	244+720,298	690,508			129.999,66		631,437		0,02			
Rasante	244+720,298	690,508	245+637,926	689,835	-0,73				917,628					
Acuerdo	245+637,926	689,835	245+841,235	689,769			247.395,06		203,309		0,01			
Rasante	245+841,235	689,769	246+457,621	689,823	0,09				616,386					
Acuerdo	246+457,621	689,823	246+617,539	689,893			227.007,69		159,918		0,01			
Rasante	246+617,539	689,893	247+627,964	690,694	0,79				1010,425					
Acuerdo	247+627,964	690,694	247+686,587	690,82			21.469,72		58,623		0,09			
Rasante	247+686,587	690,82	247+746,354	691,031	3,52				59,767					
Acuerdo	247+746,354	691,031	247+774,856	691,134			156220,65 (*)		28,502		0,01			
Rasante	247+774,856	691,134	248+000,499	691,97	3,71				225,643					
Acuerdo	248+000,499	691,97	248+150,107	692,211			35.743,86		149,608	50	0,01		25	20
Rasante	248+150,107	692,211	248+195,143	692,189	-0,48				45,036					
Acuerdo	248+195,143	692,189	248+237,330	692,188			46.104,04		42,187		0			
Rasante	248+237,330	692,188	248+283,998	692,209	0,43				46,668					
Acuerdo	248+283,998	692,209	248+333,998	692,182			25.667,63		50,000		0,01			
Rasante	248+333,998	692,182	248+484,038	691,955	-1,51				150,040					
Acuerdo	248+484,038	691,955	248+534,038	691,904			49.718,84		50,000		0			
Rasante	248+534,038	691,904	248+718,979	691,81	-0,51				184,941					
Acuerdo	248+718,979	691,81	248+834,403	691,924			38.700,39		115,424		0			
Rasante	248+834,403	691,924	248+938,271	692,181	2,47				103,868					
Acuerdo	248+938,271	692,181	248+968,271	692,225			14.715,89		30,000		0,01			
Rasante	248+968,271	692,225	249+028,740	692,251	0,44				60,469					
Acuerdo	249+028,740	692,251	249+058,740	692,272			57.450,56		30,000		0			
Rasante	249+058,740	692,272	249+374,527	692,574	0,96				315,787	120			60	48
Acuerdo	249+374,527	692,574	249+438,967	692,768			15.751,53		64,440		0,07			
Rasante	249+438,967	692,768	249+684,018	694,005	5,05				245,051					
Rasante	249+684,018	694,005	249+785,158	694,45			77.773,52		101,140		0,01			
Acuerdo	249+785,158	694,45	249+910,448	694,92	3,75				125,290					
Rasante	249+910,448	694,92	249+990,443	695,262			76.326,73		79,995		0,01			
Acuerdo	249+990,443	695,262	250+135,023	695,955	4,80				144,580					
Rasante	250+135,023	695,955	250+236,993	696,398			111.785,36		101,970		0			
Acuerdo	250+236,993	696,398	250+357,596	696,867	3,88				120,603	150			75	60
Rasante	250+357,596	696,867	250+437,606	696,959			14.674,74		80,010		0,12			
Rasante	250+437,606	696,959	250+553,246	696,778	-1,57				115,640					
Acuerdo	250+553,246	696,778	250+673,244	696,743			47.092,87		119,998		0,04			
Rasante	250+673,244	696,743	250+916,048	696,981	0,98				242,804					
Acuerdo	250+916,048	696,981	251+016,048	697,002			65.205,13		100,000		0,03			
Rasante	251+016,048	697,002	251+419,814	696,779	-0,55				403,766					
Acuerdo	251+419,814	696,779	251+499,814	696,769			93.916,70		80,000		0,02			
Rasante	251+499,814	696,769	251+593,773	696,797	0,30				93,959					
Acuerdo	251+593,773	696,797	251+673,779	696,801			158.128,04		80,006		0,01			
Rasante	251+673,779	696,801	251+816,010	696,771	-0,21				142,231					
Acuerdo	251+816,010	696,771	251+895,892	696,756			2.713.067,88		79,882		0			
Rasante	251+895,892	696,756	252+058,067	696,727	-0,18				162,175					
Acuerdo	252+058,067	696,727	252+138,069	696,738			129.644,93		80,002		0,01			
Rasante	252+138,069	696,738	252+292,640	696,806	0,44				154,571					
Acuerdo	252+292,640	696,806	252+472,344	696,88			3.656.426,48		179,704		0			
Rasante	252+472,344	696,88	253+586,231	697,315	0,39				1113,887					
Acuerdo	253+586,231	697,315	253+766,259	697,35			461.213,78		180,028		0			
Rasante	253+766,259	697,35	254+016,245	697,35	0,00				249,986					
Acuerdo	254+016,245	697,35	254+196,247	697,471			133.923,60		180,002	160	0,01		80	64
Rasante	254+196,247	697,471	254+455,212	697,819	1,34				258,965					
Acuerdo	254+455,212	697,819	254+635,210	697,934			127.500,32		179,998		0,02			
Rasante	254+635,210	697,934	255+046,235	697,906	-0,07				411,025					
Acuerdo	255+046,235	697,906	255+226,258	697,902			2.053.242,63		180,023		0			

CUADRO 10

EJE 77

VIA 1 - VIA 6 IBERICO														
Alineación	Tangente de entrada		Tangente de salida		Pendiente (‰)		Acuerdo vertical (m)		Longitud de alineación (m)	Velocidad por planta (km/h)	Aceleración vertical en acuerdo por velocidad (m/s²)		Longitud mínima de alineación por velocidad (m/s²)	
	PPKK	Z(m)	PPKK	Z(m)	N=12,5	E=15	Concavos=2.000	Convexos E=3.000			N=0,3	E=0,45	N=0,5xV	E=0,4xV
Rasante	255+226,258	697,902	256+446,991	697,926	0,02				1220,733					
Acuerdo	256+446,991	697,926	256+625,549	697,93			61.313.423,90		178,558		0			
Rasante	256+625,549	697,93	256+945,612	697,937	0,02				320,063					
Acuerdo	256+945,612	697,937	257+174,420	700,419			10.571,85		228,808	100	0,07		50	40
Rasante	257+174,420	700,419	257+383,658	704,952	21,67				209,238					
Acuerdo	257+383,658	704,952	258+049,858	708,507			20.399,00		666,200	70	0,04		35	28
Rasante	258+049,858	708,507	258+095,927	708,001	-10,99				46,069					
(*) Acuerdo de longitud y radio muy granda. Se asemeja a una rasante por lo reducido del cambio de pendiente que produce.														

EJE 71

CUADRO 11

VIA 7 IBERICO														
Alineación	Tangente de entrada		Tangente de salida		Pendiente (‰)		Acuerdo vertical (m)		Longitud de alineación (m)	Velocidad por planta (km/h)	Aceleración vertical en acuerdo por velocidad (m/s²)		Longitud mínima de alineación por velocidad (m/s²)	
	PPKK	Z(m)	PPKK	Z(m)	N=12,5	E=15	Concavos=2.000	Convexos E=3.000			N=0,3	E=0,45	N=0,5xV	E=0,4xV
Rasante	0+000,000	692,06	0+036,756	692,004	-1,51				36,756					
Acuerdo	0+036,756	692,004	0+066,756	691,981			19.752,21		30,000		0			
Rasante	0+066,756	691,981	0+101,585	691,981	0,00				34,829					
Acuerdo	0+101,585	691,981	0+131,585	691,965			27.519,46		30,000		0			
Rasante	0+131,585	691,965	0+229,535	691,858	-1,09				97,950					
Acuerdo	0+229,535	691,858	0+259,535	691,834			51.294,31		30,000		0			
Rasante	0+259,535	691,834	0+306,640	691,81	-0,50				47,105	45			22,5	18
Acuerdo	0+306,640	691,81	0+421,969	691,924			38.699,88		115,329		0			
Rasante	0+421,969	691,924	0+525,884	692,181	2,47				103,915					
Acuerdo	0+525,884	692,181	0+555,884	692,224			14.637,07		30,000		0			
Rasante	0+555,884	692,224	0+589,050	692,238	0,43				33,166					
Acuerdo	0+589,050	692,238	0+679,050	692,301			167.659,12		90,000		0			
Rasante	0+679,050	692,301	0+722,667	692,343	0,96				43,617					

EJE 69

CUADRO 12

VIA 8 IBERICO														
Alineación	Tangente de entrada		Tangente de salida		Pendiente (‰)		Acuerdo vertical (m)		Longitud de alineación (m)	Velocidad por planta (km/h)	Aceleración vertical en acuerdo por velocidad (m/s²)		Longitud mínima de alineación por velocidad (m/s²)	
	PPKK	Z(m)	PPKK	Z(m)	N=12,5	E=15	Concavos=2.000	Convexos E=3.000			N=0,3	E=0,45	N=0,5xV	E=0,4xV
Acuerdo	0+000,000	692,156	0+005,484	692,189					5,484 (*)	45			22,5	18
Rasante	0+005,484	692,189	0+062,265	692,108	-1,41		20.732,34		56,781		0			
Acuerdo	0+062,265	692,108	0+092,265	692,081					30					
Rasante	0+092,265	692,081	0+128,653	692,067	-0,40		29.600,40		36,388		0			
Acuerdo	0+128,653	692,067	0+158,653	692,044					30					
Rasante	0+158,653	692,044	0+328,798	691,859	-1,09		43.473,22		170,145		0			
Acuerdo	0+328,798	691,859	0+358,798	691,835					30					
Rasante	0+358,798	691,835	0+406,888	691,81	-0,50		51.655,64		48,09		0			
Acuerdo	0+406,888	691,81	0+521,888	691,923					115					
Rasante	0+521,888	691,923	0+659,757	692,264	2,47		38.537,46		137,869		0			
Acuerdo	0+659,757	692,264	0+689,757	692,3					30					
Rasante	0+689,757	692,3	0+754,523	692,294	-0,10		11.651,40		64,766		0,01			
Acuerdo	0+754,523	692,294	0+784,523	692,306					30					
Rasante	0+784,523	692,306	0+789,308	692,31	0,89		30.224,62		4,785		0			

(*) Longitud parcial de acuerdo vertical por inicio de eje. El acuerdo tiene continuidad en el eje con que conecta.

EJE 100

CUADRO 13

MANGO SUR IBERICO														
Alineación	Tangente de entrada		Tangente de salida		Pendiente (‰)		Acuerdo vertical (m)		Longitud de alineación (m)	Velocidad por planta (km/h)	Aceleración vertical en acuerdo por velocidad (m/s²)		Longitud mínima de alineación por velocidad (m/s²)	
	PPKK	Z(m)	PPKK	Z(m)	N=12,5	E=15	Concavos=2.000	Convexos E=3.000			N=0,3	E=0,45	N=0,5xV	E=0,4xV
Rasante	0+000,000	692,204	0+032,592	692,19	-0,44				32,592	50,000			25,000	20,000
Acuerdo	0+032,592	692,19	0+072,592	692,152			41.028,32		40,000		0			
Rasante	0+072,592	692,152	0+176,525	692,006	-1,41				103,933					

EJE 17

CUADRO 14

VIA 2E IBERICO														
Alineación	Tangente de entrada		Tangente de salida		Pendiente (‰)		Acuerdo vertical (m)		Longitud de alineación (m)	Velocidad por planta (km/h)	Aceleración vertical en acuerdo por velocidad (m/s²)		Longitud mínima de alineación por velocidad (m/s²)	
	PPKK	Z(m)	PPKK	Z(m)	N=12,5	E=15	Concavos=2.000	Convexos E=3.000			N=0,3	E=0,45	N=0,5xV	E=0,4xV
Rasante	0+000,000	691,992	0+000,814	691,991	-1,52				0,814 (*)	45,000			22,500	18,000
Acuerdo	0+000,814	691,991	0+030,814	691,968			19.731,78		30,000		0			
Rasante	0+030,814	691,968	0+065,031	691,968	0,00				34,217					
Acuerdo	0+065,031	691,968	0+095,031	691,952			28.224,11		30,000		0			
Rasante	0+095,031	691,952	0+193,797	691,847	-1,06				98,766					

(*) Longitud parcial de rasante por inicio de eje. La rasante tiene continuidad en el eje con que conecta.

EJE 36

CUADRO 15

VIA 1E IBERICO														
Alineación	Tangente de entrada		Tangente de salida		Pendiente (‰)		Acuerdo vertical (m)		Longitud de alineación (m)	Velocidad por planta (km/h)	Aceleración vertical en acuerdo por velocidad (m/s²)		Longitud mínima de alineación por velocidad (m/s²)	
	PPKK	Z(m)	PPKK	Z(m)	N=12,5	E=15	Concavos=2.000	Convexos E=3.000			N=0,3	E=0,45	N=0,5xV	E=0,4xV
Rasante	0+000,000	692,028	0+050,014	692,152	2,48				50,014	45,000			22,500	18,000
Acuerdo	0+050,014	692,152	0+080,014	692,201			17.397,26		30,000		0			
Rasante	0+080,014	692,201	0+107,569	692,222	0,76				27,555					
Acuerdo	0+107,569	692,222	0+137,569	692,243			305.023,26		30,000		0			
Rasante	0+137,569	692,243	0+174,977	692,268	0,66				37,408					
Acuerdo	0+174,977	692,268	0+204,977	692,292			99.334,52		30,000		0			
Rasante	0+204,977	692,292	0+251,468	692,337	0,96				46,491					

EJE 78

CUADRO 16

VIA 8 TRES HERMANAS														
Alineación	Tangente de entrada		Tangente de salida		Pendiente (‰)		Acuerdo vertical (m)		Longitud de alineación (m)	Velocidad por planta (km/h)	Aceleración vertical en acuerdo por velocidad (m/s²)		Longitud mínima de alineación por velocidad (m/s²)	
	PPKK	Z(m)	PPKK	Z(m)	N=12,5	E=15	Concavos=2.000	Convexos E=3.000			N=0,3	E=0,45	N=0,5xV	E=0,4xV
Rasante	0+000,000	697,172	0+364,363	697,314	0,39				364,363	100,000			50,000	40,000
Acuerdo	0+364,363	697,314	0+546,773	697,35			466.952,86		182,410		0			
Rasante	0+546,773	697,35	0+656,318	697,35	0,00				109,545					

EJE 83

CUADRO 17

VIA 10 TRES HERMANAS														
Alineación	Tangente de entrada		Tangente de salida		Pendiente (‰)		Acuerdo vertical (m)		Longitud de alineación (m)	Velocidad por planta (km/h)	Aceleración vertical en acuerdo por velocidad (m/s²)		Longitud mínima de alineación por velocidad (m/s²)	
	PPKK	Z(m)	PPKK	Z(m)	N=12,5	E=15	Concavos=2.000	Convexos E=3.000			N=0,3	E=0,45	N=0,5xV	E=0,4xV
Rasante	0+000,000	697,139	0+444,621	697,313	0,39				444,621	70,000			35,000	28,000
Acuerdo	0+444,621	697,313	0+633,940	697,35			483.375,73		189,319		0			
Rasante	0+633,940	697,35	0+795,136	697,35	0,00				161,196					

EJE 89

CUADRO 18

RAMAL ANCHO MIXTO - Comprobación ancho 1.668 mm -														
Alineación	Tangente de entrada		Tangente de salida		Pendiente (‰)		Acuerdo vertical (m)		Longitud de alineación (m)	Velocidad por planta (km/h)	Aceleración vertical en acuerdo por velocidad (m/s²)		Longitud mínima de alineación por velocidad (m/s²)	
	PPKK	Z(m)	PPKK	Z(m)	N=12,5	E=15	Concavos=2.000	Convexos E=3.000			N=0,3	E=0,45	N=0,5xV	E=0,4xV
Rasante	0+000,000	697,922	0+063,044	697,923	0,02				63,044	40,000			20,000	16,000

ALZADO ANCHO 1.435 MM

EJE 74

	VIA 1 UIC																
	Alineación	Tangente de entrada		Tangente de salida		Pendiente (‰)		Acuerdo vertical (m)		Longitud de alineación (m)	Velocidad por planta (km/h)	Aceleración vertical en acuerdo por velocidad (m/s²)		Longitud mínima de alineación por velocidad (m/s²)			
														V ≤ 140 km/h		140 <V ≤ 200 km/h	
		PPKK	Z(m)	PPKK	Z(m)	N=12,5	E=15	Concavos=2.000	Convexos E=3.000			N=0,22	E=0,31	N=V/3	E=V/4	N=V/2	E=V/3
CUADRO 27	Rasante	174+170,822	695,721	174+745,953	692,505	-5,59				575,131	160			x	x	80	53,33
	Acuerdo	174+745,953	692,505	175+377,389	690,508			129.999,85		631,436		0,02					
	Rasante	175+377,389	690,508	176+295,016	689,835	-0,73				917,627							
	Acuerdo	176+295,016	689,835	176+498,326	689,769			247.394,71		203,310		0,01					
	Rasante	176+498,326	689,769	177+114,712	689,823	0,09				616,386							
	Acuerdo	177+114,712	689,823	177+274,630	689,893			227.007,34		159,918		0,01					
	Rasante	177+274,630	689,893	178+285,053	690,694	0,79				1010,423							
	Acuerdo	178+285,053	690,694	178+343,677	690,82			21.470,27		58,624		0,09					
	Rasante	178+343,677	690,82	178+402,022	691,026	3,52				58,345							
	Acuerdo	178+402,022	691,026	178+433,370	691,139			188.973,95		31,348		0,01					
	Rasante	178+433,370	691,139	178+658,634	691,97	3,69				225,264							
	Acuerdo	178+658,634	691,97	178+808,986	692,211			36.100,08		150,352	80	0,01		26,67	20	x	x
	Rasante	178+808,986	692,211	178+854,692	692,189	-0,48				45,706							
	Acuerdo	178+854,692	692,189	178+897,192	692,188			46.861,52		42,500		0,01					
	Rasante	178+897,192	692,188	178+943,453	692,208	0,43				46,261							
	Acuerdo	178+943,453	692,208	178+985,953	692,196			29.683,77		42,500		0,02					
	Rasante	178+985,953	692,196	179+098,051	692,084	-1,00				112,098							
	Acuerdo	179+098,051	692,084	179+142,047	692,018			43.502,16		43,996		0,01					
	Rasante	179+142,047	692,018	179+172,822	691,956	-2,01				30,775							
	Acuerdo	179+172,822	691,956	179+227,275	691,887			36.301,71		54,453		0,01					
	Rasante	179+227,275	691,887	179+321,972	691,839	-0,51				94,697							
	Acuerdo	179+321,972	691,839	179+378,620	691,85			39.999,94		56,648		0,01					
	Rasante	179+378,620	691,85	179+460,444	691,924	0,90				81,824							
	Acuerdo	179+460,444	691,924	179+510,148	691,999			40.001,31		49,704		0,01					
	Rasante	179+510,148	691,999	179+599,330	692,191	2,15				89,182							
	Acuerdo	179+599,330	692,191	179+624,726	692,223			14.599,71		25,396		0,03					
	Rasante	179+624,726	692,223	179+666,403	692,24	0,41				41,677							
	Acuerdo	179+666,403	692,24	179+719,904	692,277			97.465,26		53,501		0					
	Rasante	179+719,904	692,277	180+032,119	692,575	0,96				312,215							
	Acuerdo	180+032,119	692,575	180+097,201	692,771			15.823,00		65,082		0,03					
	Rasante	180+097,201	692,771	180+341,046	694,007	5,07				243,845							
	Acuerdo	180+341,046	694,007	180+441,454	694,451			77.172,07		100,408		0					
	Rasante	180+441,454	694,451	180+565,843	694,919	3,77				124,389							
	Acuerdo	180+565,843	694,919	180+645,844	695,263			76.338,33		80,001		0					
	Rasante	180+645,844	695,263	180+790,492	695,959	4,82				144,648							
	Acuerdo	180+790,492	695,959	180+890,493	696,394			107.510,16		100,001	130	0,01		43,33	32,5	x	x
	Rasante	180+890,493	696,394	181+012,046	696,867	3,89				121,553							
	Acuerdo	181+012,046	696,867	181+092,045	696,959			14.670,98		79,999		0,09					
	Rasante	181+092,045	696,959	181+207,694	696,778	-1,57				115,649							
	Acuerdo	181+207,694	696,778	181+327,693	696,743			47.093,80		119,999	160	0,04		x	x	80	53,33
	Rasante	181+327,693	696,743	181+570,497	696,981	0,98				242,804							
	Acuerdo	181+570,497	696,981	181+670,496	697,002			65.205,14		99,999		0,03					
	Rasante	181+670,496	697,002	182+074,263	696,779	-0,55				403,767							
	Acuerdo	182+074,263	696,779	182+154,262	696,769			93.916,70		79,999		0,02					
	Rasante	182+154,262	696,769	182+248,221	696,797	0,30				93,959							
	Acuerdo	182+248,221	696,797	182+328,228	696,801			158.129,02		80,007		0,01					
	Rasante	182+328,228	696,801	182+470,457	696,771	-0,21				142,229							
	Acuerdo	182+470,457	696,771	182+550,346	696,756			2.713.592,26		79,889		0					
	Rasante	182+550,346	696,756	182+712,516	696,727	-0,18				162,170							
	Acuerdo	182+712,516	696,727	182+792,517	696,738			129.644,40		80,001		0,02					
	Rasante	182+792,517	696,738	182+946,978	696,805	0,44				154,461							
	Acuerdo	182+946,978	696,805	183+126,903	696,88			3.665.399,71		179,925		0					
	Rasante	183+126,903	696,88	184+240,493	697,315	0,39				1113,590							
	Acuerdo	184+240,493	697,315	184+420,495	697,35			461.071,61		180,002		0					
	Rasante	184+420,495	697,35	184+670,509	697,35	0,00				250,014							

EJE 74

VIA 1 UIC																
Alineación	Tangente de entrada		Tangente de salida		Pendiente (‰)		Acuerdo vertical (m)		Longitud de alineación (m)	Velocidad por planta (km/h)	Aceleración vertical en acuerdo por velocidad (m/s²)		Longitud mínima de alineación por velocidad (m/s²)			
													V ≤ 140 km/h		140 <V ≤ 200 km/h	
	PPKK	Z(m)	PPKK	Z(m)	N=12,5	E=15	Concavos=2.000	Convexos E=3.000			N=0,22	E=0,31	N=V/3	E=V/4	N=V/2	E=V/3
Acuerdo	184+670,509	697,35	184+850,512	697,471			133.923,60		180,003		0,01					
Rasante	184+850,512	697,471	185+109,477	697,819	1,34				258,965							
Acuerdo	185+109,477	697,819	185+289,475	697,934			127.500,32		179,998		0,02					
Rasante	185+289,475	697,934	185+700,500	697,906	-0,07				411,025							
Acuerdo	185+700,500	697,906	185+880,522	697,902			2.053.219,51		180,022		0					
Rasante	185+880,522	697,902	187+100,832	697,926	0,02				1220,310							
Acuerdo	187+100,832	697,926	187+280,168	697,93			61.848.689,00		179,336		0					
Rasante	187+280,168	697,93	187+600,114	697,937	0,02				319,946							
Acuerdo	187+600,114	697,937	187+828,933	700,419			10.572,92		228,819		0,19					
Rasante	187+828,933	700,419	188+038,188	704,952	21,66				209,255							
Acuerdo	188+038,188	704,952	188+704,411	708,507			20.400,38		666,223		0,1					
Rasante	188+704,411	708,507	188+750,469	708,001	-10,99				46,058							

EJE 2

VIA 2 UIC																
	Alineación	Tangente de entrada		Tangente de salida		Pendiente (‰)		Acuerdo vertical (m)		Longitud de alineación (m)	Velocidad por planta (km/h)	Aceleración vertical en acuerdo por velocidad (m/s²)		Longitud mínima de alineación por velocidad (m/s²)			
														V ≤ 140 km/h		140 <V ≤ 200 km/h	
		PPKK	Z(m)	PPKK	Z(m)	N=12,5	E=15	Concavos=2.000	Convexos E=3.000			N=0,22	E=0,31	N=V/3	E=V/4	N=V/2	E=V/3
CUADRO 28	Rasante	174+172,653	695,721	174+747,783	692,505	-5,59				575,130	160			x	x	80	53,33
	Acuerdo	174+747,783	692,505	175+379,220	690,508			129.999,84		631,437		0,02					
	Rasante	175+379,220	690,508	176+297,002	689,835	-0,73				917,782							
	Acuerdo	176+297,002	689,835	176+500,002	689,769			247.018,31		203,000		0,01					
	Rasante	176+500,002	689,769	177+116,504	689,823	0,09				616,502							
	Acuerdo	177+116,504	689,823	177+276,504	689,893			227.125,70		160,000		0,01					
	Rasante	177+276,504	689,893	177+933,939	690,414	0,79				657,435							
	Acuerdo	177+933,939	690,414	178+066,939	690,493			339.134,53		133,000		0,01					
	Rasante	178+066,939	690,493	178+210,050	690,551	0,40				143,111							
	Acuerdo	178+210,050	690,551	178+343,049	690,812			42.591,70		132,999		0,05					
	Rasante	178+343,049	690,812	178+635,882	691,843	3,52				292,833	80			26,67	20	x	x
	Acuerdo	178+635,882	691,843	178+873,046	692,24			64.059,83		237,164		0,01					
	Rasante	178+873,046	692,24	178+940,513	692,227	-0,18				67,467							
	Acuerdo	178+940,513	692,227	178+989,774	692,198			59.995,76		49,261		0,01					
	Rasante	178+989,774	692,198	179+104,029	692,084	-1,00				114,255							
	Acuerdo	179+104,029	692,084	179+148,045	692,018			43.501,89		44,016		0,01					
	Rasante	179+148,045	692,018	179+178,814	691,956	-2,01				30,769							
	Acuerdo	179+178,814	691,956	179+233,263	691,887			36.299,54		54,449		0,01					
	Rasante	179+233,263	691,887	179+327,961	691,839	-0,51				94,698							
	Acuerdo	179+327,961	691,839	179+384,608	691,85			40.000,13		56,647		0,01					
	Rasante	179+384,608	691,85	179+466,434	691,924	0,90				81,826							
	Acuerdo	179+466,434	691,924	179+516,137	691,999			40.000,87		49,703		0,01					
	Rasante	179+516,137	691,999	179+605,319	692,191	2,15				89,182							
	Acuerdo	179+605,319	692,191	179+630,715	692,223			14.599,71		25,396		0,03					
	Rasante	179+630,715	692,223	179+672,431	692,24	0,41				41,716							
	Acuerdo	179+672,431	692,24	179+725,856	692,277			97.505,29		53,425		0,01					
	Rasante	179+725,856	692,277	179+983,002	692,522	0,95				257,146							
	Acuerdo	179+983,002	692,522	180+027,002	692,627			15.266,19		44,000		0,03					

EJE 2

VIA 2 UIC																
Alineación	Tangente de entrada		Tangente de salida		Pendiente (‰)		Acuerdo vertical (m)		Longitud de alineación (m)	Velocidad por planta (km/h)	Aceleración vertical en acuerdo por velocidad (m/s²)		Longitud mínima de alineación por velocidad (m/s²)			
													V ≤ 140 km/h		140 <V ≤ 200 km/h	
	PPKK	Z(m)	PPKK	Z(m)	N=12,5	E=15	Concavos=2.000	Convexos E=3.000			N=0,22	E=0,31	N=V/3	E=V/4	N=V/2	E=V/3
Rasante	180+027,002	692,627	180+114,320	692,962	3,84				87,318							
Acuerdo	180+114,320	692,962	180+191,957	693,293			92.023,26		77,637		0,01					
Rasante	180+191,957	693,293	180+571,370	695,069	4,68				379,413							
Acuerdo	180+571,370	695,069	180+771,374	695,926			251.847,96		200,004		0					
Rasante	180+771,374	695,926	181+003,476	696,828	3,89				232,102							
Acuerdo	181+003,476	696,828	181+103,476	696,944			18.335,85		100,000	120	0,06		40	30	x	x
Rasante	181+103,476	696,944	181+209,125	696,778	-1,57				105,649							
Acuerdo	181+209,125	696,778	181+329,122	696,743			47.093,18		119,997		0,03					
Rasante	181+329,122	696,743	181+555,430	696,965	0,98				226,308							
Acuerdo	181+555,430	696,965	181+688,428	696,993			86.722,61		132,998	140	0,02		46,67	35	x	x
Rasante	181+688,428	696,993	181+845,729	696,906	-0,55				157,301							
Acuerdo	181+845,729	696,906	181+978,728	696,858			354.393,61		132,999		0					
Rasante	181+978,728	696,858	182+687,471	696,732	-0,18				708,743							
Acuerdo	182+687,471	696,732	182+820,471	696,749			218.892,58		133,000		0,01					
Rasante	182+820,471	696,749	183+041,469	696,844	0,43				220,998							
Acuerdo	183+041,469	696,844	183+171,469	696,897			3.281.389,15		130,000		0					
Rasante	183+171,469	696,897	184+242,000	697,315	0,39				1070,531							
Acuerdo	184+242,000	697,315	184+422,000	697,35			461.086,09		180,000		0					
Rasante	184+422,000	697,35	184+671,997	697,35	0,00				249,997							
Acuerdo	184+671,997	697,35	184+852,000	697,471			133.923,34		180,003		0,01					
Rasante	184+852,000	697,471	185+110,964	697,819	1,34				258,964							
Acuerdo	185+110,964	697,819	185+290,962	697,934			127.500,08		179,998	160	0,01		x	x	80	53,33
Rasante	185+290,962	697,934	185+701,998	697,906	-0,07				411,036							
Acuerdo	185+701,998	697,906	185+881,998	697,902			2.052.965,84		180,000		0					
Rasante	185+881,998	697,902	187+101,988	697,926	0,02				1219,990							
Acuerdo	187+101,988	697,926	187+281,988	697,93			62.161.499,51		180,000		0					
Rasante	187+281,988	697,93	187+601,545	697,937	0,02				319,557							
Acuerdo	187+601,545	697,937	187+830,657	700,419			10.600,00		229,112		0,19					
Rasante	187+830,657	700,419	188+040,323	704,955	21,64				209,666							
Acuerdo	188+040,323	704,955	188+707,111	708,504			20.435,00		666,788		0,1					
Rasante	188+707,111	708,504	188+752,886	708,001	-10,99				45,775							

EJE 39

CUADRO 29

VIA 3 UIC														
Alineación	Tangente de entrada		Tangente de salida		Pendiente (‰)		Acuerdo vertical (m)		Longitud de alineación (m)	Velocidad por planta (km/h)	Aceleración vertical en acuerdo por velocidad (m/s²)		Longitud mínima de alineación por velocidad (m/s²) V ≤ 140 km/h	
	PPKK	Z(m)	PPKK	Z(m)	N=12,5	E=15	Concavos=2.000	Convexos E=3.000			N=0,22	E=0,31	N=V/3	E=V/4
Rasante	0+000,000	692,159	0+092,541	692,066	-1,00				92,541	50			16,67	12,5
Acuerdo	0+092,541	692,066	0+119,541	692,017			16.522,15		27,000	50	0,01		16,67	12,5
Rasante	0+119,541	692,017	0+146,809	691,946	-2,63				27,268	50			16,67	12,5
Acuerdo	0+146,809	691,946	0+173,809	691,903			12.731,03		27,000	50	0,02		16,67	12,5
Rasante	0+173,809	691,903	0+299,491	691,839	-0,51				125,682	50			16,67	12,5
Acuerdo	0+299,491	691,839	0+356,171	691,85			39.998,31		56,680	50	0		16,67	12,5
Rasante	0+356,171	691,85	0+437,979	691,924	0,90				81,808	50			16,67	12,5
Acuerdo	0+437,979	691,924	0+487,683	691,999			40.001,31		49,704	50	0		16,67	12,5
Rasante	0+487,683	691,999	0+576,856	692,191	2,15				89,173	50			16,67	12,5
Acuerdo	0+576,856	692,191	0+602,270	692,223			14.599,56		25,414	50	0,01		16,67	12,5
Rasante	0+602,270	692,223	0+638,467	692,238	0,41				36,197	50			16,67	12,5
Acuerdo	0+638,467	692,238	0+706,260	692,284			122.200,11		67,793	50	0		16,67	12,5
Rasante	0+706,260	692,284	0+782,224	692,357	0,96				75,964	50			16,67	12,5

EJE 35

CUADRO 30

VIA 4 UIC														
Alineación	Tangente de entrada		Tangente de salida		Pendiente (‰)		Acuerdo vertical (m)		Longitud de alineación (m)	Velocidad por planta (km/h)	Aceleración vertical en acuerdo por velocidad (m/s²)		Longitud mínima de alineación por velocidad (m/s²) V ≤ 140 km/h	
	PPKK	Z(m)	PPKK	Z(m)	N=12,5	E=15	Concavos=2.000	Convexos E=3.000			N=0,22	E=0,31	N=V/3	E=V/4
Rasante	0+000,000	692,159	0+091,069	692,069	-0,99				91,069	50			16,67	12,5
Acuerdo	0+091,069	692,069	0+118,569	692,019			16.920,86		27,500	50	0,01		16,67	12,5
Rasante	0+118,569	692,019	0+146,559	691,946	-2,62				27,990	50			16,67	12,5
Acuerdo	0+146,559	691,946	0+174,059	691,903			13.079,40		27,500	50	0,01		16,67	12,5
Rasante	0+174,059	691,903	0+299,491	691,839	-0,51				125,432	50			16,67	12,5
Acuerdo	0+299,491	691,839	0+356,171	691,85			39.998,31		56,680	50	0		16,67	12,5
Rasante	0+356,171	691,85	0+437,979	691,924	0,90				81,808	50			16,67	12,5
Acuerdo	0+437,979	691,924	0+487,683	691,999			40.002,40		49,704	50	0		16,67	12,5
Rasante	0+487,683	691,999	0+576,856	692,191	2,15				89,173	50			16,67	12,5
Acuerdo	0+576,856	692,191	0+602,272	692,223			14.599,36		25,416	50	0,01		16,67	12,5
Rasante	0+602,272	692,223	0+643,148	692,24	0,41				40,876	50			16,67	12,5
Acuerdo	0+643,148	692,24	0+696,258	692,276			97.507,26		53,110	50	0		16,67	12,5
Rasante	0+696,258	692,276	0+870,521	692,441	0,95				174,263	50			16,67	12,5
Acuerdo	0+870,521	692,441	0+900,521	692,47			2.917.003,94		30,000	50	0		16,67	12,5
Rasante	0+900,521	692,47	0+913,629	692,483	0,96				13,108	50			16,67	12,5

EJE 38

CUADRO 31

VIA 5 UIC														
Alineación	Tangente de entrada		Tangente de salida		Pendiente (‰)		Acuerdo vertical (m)		Longitud de alineación (m)	Velocidad por planta (km/h)	Aceleración vertical en acuerdo por velocidad (m/s²)		Longitud mínima de alineación por velocidad (m/s²) V ≤ 140 km/h	
	PPKK	Z(m)	PPKK	Z(m)	N=12,5	E=15	Concavos=2.000	Convexos E=3.000			N=0,22	E=0,31	N=V/3	E=V/4
Rasante	0+000,000	692,12	0+003,501	692,108	-0,98				3,501	50			16,67	12,5
Acuerdo	0+003,501	692,108	0+031,001	692,055			14.303,07		27,500	50	0,01		16,67	12,5
Rasante	0+031,001	692,055	0+060,635	691,969	-2,90				29,634	50			16,67	12,5
Acuerdo	0+060,635	691,969	0+088,135	691,922			11.495,75		27,500	50	0,02		16,67	12,5
Rasante	0+088,135	691,922	0+308,799	691,81	-0,51				220,664	50			16,67	12,5
Acuerdo	0+308,799	691,81	0+424,226	691,924			38.700,18		115,427	50	0		16,67	12,5
Rasante	0+424,226	691,924	0+527,903	692,18	2,47				103,677	50			16,67	12,5
Acuerdo	0+527,903	692,18	0+558,284	692,224			14.599,18		30,381	50	0,01		16,67	12,5
Rasante	0+558,284	692,224	0+612,106	692,245	0,39				53,822	50			16,67	12,5
Acuerdo	0+612,106	692,245	0+657,674	692,277			72.763,77		45,568	50	0		16,67	12,5
Rasante	0+657,674	692,277	0+718,402	692,339	1,02				60,728	50			16,67	12,5
Acuerdo	0+718,402	692,339	0+745,902	692,366			393.045,44		27,500	50	0		16,67	12,5
Rasante	0+745,902	692,366	0+808,646	692,426	0,95				62,744	50			16,67	12,5

EJE 63

CUADRO 32

VIA M1 UIC														
Alineación	Tangente de entrada		Tangente de salida		Pendiente (‰)		Acuerdo vertical (m)		Longitud de alineación (m)	Velocidad por planta (km/h)	Aceleración vertical en acuerdo por velocidad (m/s²)		Longitud mínima de alineación por velocidad (m/s²) V ≤ 140 km/h	
	PPKK	Z(m)	PPKK	Z(m)	N=12,5	E=15	Concavos=2.000	Convexos E=3.000			N=0,22	E=0,31	N=V/3	E=V/4
Rasante	0+000,000	692,296	0+147,387	692,155	-0,96					50			16,67	12,5
Acuerdo	0+147,387	692,155	0+169,513	692,117			14.601,01			50	0,01		16,67	12,5
Rasante	0+169,513	692,117	0+247,429	691,924	-2,47					50			16,67	12,5
Acuerdo	0+247,429	691,924	0+357,910	691,808			38.700,43			50	0		16,67	12,5
Rasante	0+357,910	691,808	0+357,910	691,808	0,38					50			16,67	12,5

EJE 62

CUADRO 33

VIA M2 UIC														
Alineación	Tangente de entrada		Tangente de salida		Pendiente (‰)		Acuerdo vertical (m)		Longitud de alineación (m)	Velocidad por planta (km/h)	Aceleración vertical en acuerdo por velocidad (m/s²)		Longitud mínima de alineación por velocidad (m/s²) V ≤ 140 km/h	
	PPKK	Z(m)	PPKK	Z(m)	N=12,5	E=15	Concavos=2.000	Convexos E=3.000			N=0,22	E=0,31	N=V/3	E=V/4
Rasante	0+000,000	692,215	0+059,918	692,16	-0,92				59,918	50			16,67	12,5
Acuerdo	0+059,918	692,16	0+082,578	692,121			14.600,48		22,660	50	0,01		16,67	12,5
Rasante	0+082,578	692,121	0+162,359	691,924	-2,47				79,781	50			16,67	12,5
Acuerdo	0+162,359	691,924	0+272,840	691,808			38.700,45		110,481	50	0		16,67	12,5
Rasante	0+272,840	691,808	0+272,692	691,808	0,38				-0,148	50			16,67	12,5

EJE 89

CUADRO 34

RAMAL ANCHO MIXTO - Comprobación ancho 1.435 mm -														
Alineación	Tangente de entrada		Tangente de salida		Pendiente (‰)		Acuerdo vertical (m)		Longitud de alineación (m)	Velocidad por planta (km/h)	Aceleración vertical en acuerdo por velocidad (m/s²)		Longitud mínima de alineación por velocidad (m/s²) V ≤ 140 km/h	
	PPKK	Z(m)	PPKK	Z(m)	N=12,5	E=15	Concavos=2.000	Convexos E=3.000			N=0,22	E=0,31	N=V/3	E=V/4
Rasante	0+000,000	697,922	0+063,044	697,923	0,02				63,044	40,000			13,330	10,000

APÉNDICE 2. LISTADOS DE TRAZADO

ALTERNATIVA 1

PUNTOS SINGULARES EN PLANTA ANCHO 1.668 mm

Istram 20.08.08.26 11/02/21 10:15:32 200009 pagina 1
PROYECTO : ESTUDIO INFORMATIVO DE LA INTEGRACION DEL FFCC EN VALLADOLID
GRUPO : 9 : EJES ANCHO IB
EJE : 14 : VIA 11 IB

* * * LISTADO DE LAS ALINEACIONES * * *

DATO	TIPO	LONGITUD	P.K.	X TANGENCIA	Y TANGENCIA	RADIO	PARAMETRO	AZIMUT	Cos/Xc/Xinf	Sen/Yc/Yinf
1	RECTA	17.142	0.000	355911.312	4611338.054			79.9097	0.9506173	0.3103655
2	CIRC.	24.258	17.142	355927.607	4611343.374	200.000		79.9097	355989.680	4611153.251
3	RECTA	123.783	41.400	355951.067	4611349.488			87.6313	0.9811855	0.1930672
4	CIRC.	47.496	165.183	356072.521	4611373.386	-215.000		87.6313	356031.012	4611584.341
5	RECTA	303.122	212.679	356117.737	4611387.608			73.5675	0.9150356	0.4033732
6	CIRC.	32.052	515.801	356395.104	4611509.880	-175.000		73.5675	356324.514	4611670.011
7	RECTA	99.316	547.853	356423.088	4611525.415			61.9077	0.8262645	0.5632823
			647.169	356505.150	4611581.358			61.9077		

Istram 20.08.08.26 11/02/21 10:14:24 200009 pagina 1
PROYECTO : ESTUDIO INFORMATIVO DE LA INTEGRACION DEL FFCC EN VALLADOLID
GRUPO : 9 : EJES ANCHO IB
EJE : 18 : VIA 8 IB

* * * LISTADO DE LAS ALINEACIONES * * *

DATO	TIPO	LONGITUD	P.K.	X TANGENCIA	Y TANGENCIA	RADIO	PARAMETRO	AZIMUT	Cos/Xc/Xinf	Sen/Yc/Yinf
1	RECTA	20.493	0.000	356004.279	4611362.166			80.6565	0.9541926	0.2991929
2	CIRC.	21.359	20.493	356023.833	4611368.297	-550.000		80.6565	355859.277	4611893.103
3	RECTA	41.366	41.852	356044.085	4611375.082			78.1842	0.9418570	0.3360139
4	CIRC.	24.320	83.218	356083.046	4611388.982	-350.000		78.1842	355965.441	4611718.632
5	RECTA	347.971	107.538	356105.649	4611397.942			73.7607	0.9162551	0.4005953
6	CIRC.	44.685	455.509	356424.479	4611537.338	-240.000		73.7607	356328.336	4611757.239
7	RECTA	2.295	500.193	356463.524	4611558.935			61.9077	0.8262645	0.5632823
			502.488	356465.420	4611560.228			61.9077		

Istram 20.08.08.26 11/02/21 10:14:03 200009 pagina 1
PROYECTO : ESTUDIO INFORMATIVO DE LA INTEGRACION DEL FFCC EN VALLADOLID
GRUPO : 9 : EJES ANCHO IB
EJE : 16 : VIA 6 IB

* * * LISTADO DE LAS ALINEACIONES * * *

DATO	TIPO	LONGITUD	P.K.	X TANGENCIA	Y TANGENCIA	RADIO	PARAMETRO	AZIMUT	Cos/Xc/Xinf	Sen/Yc/Yinf
1	RECTA	26.550	0.000	356069.289	4611391.931			74.5492	0.9211463	0.3892164
2	CIRC.	19.509	26.550	356093.746	4611402.264	-1500.000		74.5492	355509.921	4612783.984
3	RECTA	326.507	46.059	356111.667	4611409.974			73.7212	0.9160063	0.4011639
4	CIRC.	63.995	372.566	356410.749	4611540.957	-800.000		73.7212	356089.818	4612273.762
5	RECTA	114.556	436.561	356468.280	4611568.945			68.6286	0.8810209	0.4730774
6	CIRC.	39.741	551.117	356569.207	4611623.139	350.000		68.6286	356734.784	4611314.782
7	RECTA	3.496	590.859	356605.211	4611639.914			75.8572	0.9289485	0.3702089
			594.354	356608.458	4611641.208			75.8572		

Istram 20.08.08.26 11/02/21 10:14:48 200009 pagina 1
PROYECTO : ESTUDIO INFORMATIVO DE LA INTEGRACION DEL FFCC EN VALLADOLID
GRUPO : 9 : EJES ANCHO IB
EJE : 19 : VIA 9 IB

* * * LISTADO DE LAS ALINEACIONES * * *

DATO	TIPO	LONGITUD	P.K.	X TANGENCIA	Y TANGENCIA	RADIO	PARAMETRO	AZIMUT	Cos/Xc/Xinf	Sen/Yc/Yinf
1	RECTA	14.222	0.000	356038.078	4611368.817			80.6565	0.9541926	0.2991929
2	CIRC.	53.162	14.222	356051.648	4611373.072	-500.000		80.6565	355902.052	4611850.168
3	RECTA	343.499	67.384	356101.435	4611391.642			73.8877	0.9170526	0.3987663
4	CIRC.	19.656	410.883	356416.441	4611528.618	-250.000		73.8877	356316.750	4611757.881
5	RECTA	11.978	430.538	356434.140	4611537.156			68.8824	0.8829001	0.4695609
			442.516	356444.715	4611542.780			68.8824		

Istram 20.08.08.26 11/02/21 10:15:07 200009 pagina 1
PROYECTO : ESTUDIO INFORMATIVO DE LA INTEGRACION DEL FFCC EN VALLADOLID
GRUPO : 9 : EJES ANCHO IB
EJE : 20 : VIA 10 IB

* * * LISTADO DE LAS ALINEACIONES * * *

DATO	TIPO	LONGITUD	P.K.	X TANGENCIA	Y TANGENCIA	RADIO	PARAMETRO	AZIMUT	Cos/Xc/Xinf	Sen/Yc/Yinf
1	RECTA	1.602	0.000	356071.881	4611375.468			80.6565	0.9541926	0.2991929
2	CIRC.	20.113	1.602	356073.410	4611375.947	-190.000		80.6565	356016.563	4611557.244
3	RECTA	305.288	21.716	356092.248	4611382.969			73.9173	0.9172377	0.3983402
4	CIRC.	22.697	327.004	356372.269	4611504.577	800.000		73.9173	356690.941	4610770.787
5	CIRC.	23.790	349.700	356393.213	4611513.322	-350.000		75.7234	356262.957	4611838.181
6	RECTA	1.420	373.490	356414.976	4611522.919			71.3962	0.9007485	0.4343411
			374.910	356416.255	4611523.536			71.3962		

Istram 20.08.08.26 11/02/21 10:17:15 200009 pagina 1
PROYECTO : ESTUDIO INFORMATIVO DE LA INTEGRACION DEL FFCC EN VALLADOLID
GRUPO : 9 : EJES ANCHO IB
EJE : 37 : VIA 8 IB (TRES HERMANOS)

* * * LISTADO DE LAS ALINEACIONES * * *

DATO	TIPO	LONGITUD	P.K.	X TANGENCIA	Y TANGENCIA	RADIO	PARAMETRO	AZIMUT	Cos/Xc/Xinf	Sen/Yc/Yinf
1	RECTA	194.959	0.000	358842.691	4614795.675			37.3029	0.5529931	0.8331858
	CLOT.	10.000	194.959	358950.502	4614958.112		63.246	37.3029	358950.502	4614958.112
2	CIRC.	20.903	204.959	358955.997	4614966.466	-400.000		36.5071	358619.984	4615183.480
	CLOT.	20.000	225.862	358966.874	4614984.314		89.443	33.1802	358976.541	4615001.822
3	RECTA	406.564	245.862	358976.541	4615001.822			31.5887	0.4760820	0.8794009
	CLOT.	20.000	652.426	359170.099	4615359.354		89.443	31.5887	359170.099	4615359.354
4	CIRC.	15.903	672.426	359179.473	4615377.020	-400.000		29.9971	358823.063	4615558.601
	CLOT.	20.000	688.329	359186.409	4615391.330		89.443	27.4661	359194.468	4615409.634
5	RECTA	192.706	708.329	359194.468	4615409.634			25.8745	0.3953382	0.9185356
			901.035	359270.652	4615586.641			25.8745		

Istram 20.08.08.26 11/02/21 10:12:56 200009 pagina 1
PROYECTO : ESTUDIO INFORMATIVO DE LA INTEGRACION DEL FFCC EN VALLADOLID
GRUPO : 9 : EJES ANCHO IB
EJE : 21 : VIA 4 IB

* * * LISTADO DE LAS ALINEACIONES * * *

DATO	TIPO	LONGITUD	P.K.	X TANGENCIA	Y TANGENCIA	RADIO	PARAMETRO	AZIMUT	Cos/Xc/Xinf	Sen/Yc/Yinf
1	RECTA	26.173	0.000	356280.091	4611494.380			71.9828	0.9047117	0.4260244
2	CIRC.	11.153	26.173	356303.770	4611505.530	350.000		71.9828	356452.879	4611188.881
3	RECTA	142.949	37.326	356313.934	4611510.120			74.0114	0.9178258	0.3969835
4	CIRC.	12.527	180.275	356445.136	4611566.869	500.000		74.0114	356643.628	4611107.956
5	RECTA	4.724	192.802	356456.695	4611571.697			75.6064	0.9274830	0.3738653
			197.526	356461.077	4611573.463			75.6064		

Istram 20.08.08.26 11/02/21 10:15:56 200009 pagina 1
PROYECTO : ESTUDIO INFORMATIVO DE LA INTEGRACION DEL FFCC EN VALLADOLID
GRUPO : 9 : EJES ANCHO IB
EJE : 38 : VIA MANGO 1 IB (TRES HERMANOS)

* * * LISTADO DE LAS ALINEACIONES * * *

DATO	TIPO	LONGITUD	P.K.	X TANGENCIA	Y TANGENCIA	RADIO	PARAMETRO	AZIMUT	Cos/Xc/Xinf	Sen/Yc/Yinf
1	RECTA	99.998	0.000	358872.513	4614836.760			231.5887	-0.4760822	-0.8794008
			99.998	358824.906	4614748.822			231.5887		

Istram 20.08.08.26 11/02/21 10:17:41 200009 pagina 1
PROYECTO : ESTUDIO INFORMATIVO DE LA INTEGRACION DEL FFCC EN VALLADOLID
GRUPO : 9 : EJES ANCHO IB
EJE : 39 : VIA MANGO 2 (TRES HERMANOS)

* * * LISTADO DE LAS ALINEACIONES * * *

DATO	TIPO	LONGITUD	P.K.	X TANGENCIA	Y TANGENCIA	RADIO	PARAMETRO	AZIMUT	Cos/Xc/Xinf	Sen/Yc/Yinf
1	RECTA	100.000	0.000	359250.423	4615534.258			31.5887	0.4760822	0.8794008
			100.000	359298.031	4615622.199			31.5887		

Istram 20.08.08.26 11/02/21 10:16:21 200009 pagina 1
PROYECTO : ESTUDIO INFORMATIVO DE LA INTEGRACION DEL FFCC EN VALLADOLID
GRUPO : 9 : EJES ANCHO IB
EJE : 40 : VIA 4 IB (TRES HERMANOS)

* * * LISTADO DE LAS ALINEACIONES * * *

DATO	TIPO	LONGITUD	P.K.	X TANGENCIA	Y TANGENCIA	RADIO	PARAMETRO	AZIMUT	Cos/Xc/Xinf	Sen/Yc/Yinf
1	RECTA	23.302	0.000	358921.237	4614917.849			30.3281	0.4585766	0.8886549
2	CIRC.	89.106	23.302	358931.923	4614938.557	4500.000		30.3281	362930.870	4612874.962
3	RECTA	509.685	112.409	358973.566	4615017.332			31.5887	0.4760822	0.8794008
			622.094	359216.218	4615465.549			31.5887		

Istram 20.08.08.26 11/02/21 10:16:51 200009 pagina 1
PROYECTO : ESTUDIO INFORMATIVO DE LA INTEGRACION DEL FFCC EN VALLADOLID
GRUPO : 9 : EJES ANCHO IB
EJE : 41 : VIA 6 IB (TRES HERMANOS)

* * * LISTADO DE LAS ALINEACIONES * * *

DATO	TIPO	LONGITUD	P.K.	X TANGENCIA	Y TANGENCIA	RADIO	PARAMETRO	AZIMUT	Cos/Xc/Xinf	Sen/Yc/Yinf
1	RECTA	0.013	0.000	358948.126	4614958.362			30.3281	0.4585766	0.8886549
2	CIRC.	70.889	0.013	358948.132	4614958.374	3580.000		30.3281	362129.517	4613316.670
3	RECTA	447.201	70.902	358981.262	4615021.044			31.5887	0.4760822	0.8794008
			518.103	359194.166	4615414.313			31.5887		

Istram 20.08.08.26 11/02/21 10:13:20 200009 pagina 1
PROYECTO : ESTUDIO INFORMATIVO DE LA INTEGRACION DEL FFCC EN VALLADOLID
GRUPO : 9 : EJES ANCHO IB
EJE : 49 : VIA 5 IB - VIA 1 IB

* * * LISTADO DE LAS ALINEACIONES * * *

DATO	TIPO	LONGITUD	P.K.	X TANGENCIA	Y TANGENCIA	RADIO	PARAMETRO	AZIMUT	Cos/Xc/Xinf	Sen/Yc/Yinf
1	RECTA	4.876	0.000	356030.189	4611379.454			73.2886	0.9132593	0.4073789
2	CIRC.	33.805	4.876	356034.642	4611381.441	1100.000		73.2886	356482.759	4610376.855
3	CIRC.	38.020	38.681	356065.721	4611394.735	-1600.000		75.2450	355459.121	4612875.288
4	RECTA	334.606	76.701	356100.728	4611409.566			73.7323	0.9160762	0.4010042
5	CIRC.	36.054	411.307	356407.253	4611543.745	-450.000		73.7323	356226.801	4611955.979
6	RECTA	128.792	447.361	356439.667	4611559.509			68.6317	0.8810436	0.4730351
7	CIRC.	52.090	576.153	356553.138	4611620.432	600.000		68.6317	356836.959	4611091.806
8	RECTA	303.162	628.242	356600.042	4611643.051			74.1586	0.9187409	0.3948610
	CLOT.	247.157	931.404	356878.569	4611762.757		487.058	74.1586	356878.569	4611762.757
9	CIRC.	454.115	1178.561	357101.083	4611869.922	-959.816		65.9619	356612.003	4612695.784
	CLOT.	130.346	1632.676	357423.679	4612183.506		353.707	35.8417	357488.175	4612296.746
10	RECTA	217.253	1763.023	357488.175	4612296.746			31.5189	0.4751181	0.8799220
	CLOT.	10.000	1980.276	357591.396	4612487.912		921.954	31.5189	357591.396	4612487.912
11	CIRC.	67.536	1990.276	357596.147	4612496.711	85000.000		31.5227	432387.145	4572107.273
	CLOT.	10.000	2057.812	357628.262	4612556.123		921.954	31.5733	357633.021	4612564.918
12	RECTA	1212.331	2067.812	357633.021	4612564.918			31.5770	0.4759206	0.8794883
	CLOT.	30.000	3280.143	358209.994	4613631.149		2449.490	31.5770	358209.994	4613631.149
13	CIRC.	77.577	3310.143	358224.273	4613657.533	200000.000		31.5818	534114.787	4518460.228
	CLOT.	30.000	3387.720	358261.212	4613725.751		2449.490	31.6065	358275.503	4613752.129
	CLOT.	30.000	3417.720	358275.503	4613752.129		2449.490	31.6112	358275.503	4613752.129
14	CIRC.	80.710	3447.720	358289.794	4613778.506	-200000.000		31.6065	182436.218	4709044.029
	CLOT.	30.000	3528.430	358328.224	4613849.479		2449.490	31.5808	358342.502	4613875.864
15	RECTA	734.013	3558.430	358342.502	4613875.864			31.5760	0.4759068	0.8794957
16	CIRC.	179.408	4292.444	358691.824	4614521.426	1000000.000		31.5760	1238187.548	4138614.638
	CLOT.	40.000	4471.852	358777.220	4614679.207		6324.555	31.5874	358796.263	4614714.383
17	RECTA	1166.216	4511.852	358796.263	4614714.383			31.5887	0.4760822	0.8794008
	CLOT.	30.000	5678.068	359351.477	4615739.955		6708.204	31.5887	359351.477	4615739.955
18	CIRC.	131.525	5708.068	359365.760	4615766.337	-1500000.000		31.5881	-959742.592	5329876.381
	CLOT.	30.000	5839.593	359428.370	4615882.003		6708.204	31.5825	359442.650	4615908.387
19	RECTA	1159.433	5869.593	359442.650	4615908.387			31.5818	0.4759875	0.8794521
	CLOT.	20.000	7029.026	359994.526	4616928.052		3714.835	31.5818	359994.526	4616928.052
20	CIRC.	118.140	7049.026	360004.045	4616945.641	690000.000		31.5828	966821.213	4288505.501
	CLOT.	20.000	7167.166	360060.289	4617049.534		3714.835	31.5937	360069.812	4617067.121
21	RECTA	1053.929	7187.166	360069.812	4617067.121			31.5946	0.4761635	0.8793568
	CLOT.	35.000	8241.094	360571.654	4617993.900		187.083	31.5946	360571.654	4617993.900
22	CIRC.	55.170	8276.094	360588.499	4618024.580	1000.000		32.7087	361459.389	4617533.101
	CLOT.	35.000	8331.265	360616.925	4618071.855		187.083	36.2209	360636.124	4618101.119
	CLOT.	35.000	8366.265	360636.124	4618101.119		187.083	37.3350	360636.124	4618101.119
23	CIRC.	58.652	8401.265	360655.323	4618130.382	-1000.000		36.2209	359812.860	4618669.136

Istram 20.08.08.26 11/02/21 10:13:20 200009 pagina 2
PROYECTO : ESTUDIO INFORMATIVO DE LA INTEGRACION DEL FFCC EN VALLADOLID
GRUPO : 9 : EJES ANCHO IB
EJE : 49 : VIA 5 IB - VIA 1 IB

* * * LISTADO DE LAS ALINEACIONES * * *

DATO	TIPO	LONGITUD	P.K.	X TANGENCIA	Y TANGENCIA	RADIO	PARAMETRO	AZIMUT	Cos/Xc/Xinf	Sen/Yc/Yinf
	CLOT.	35.000	8459.917	360685.455	4618180.693		187.083	32.4870	360702.193	4618211.431
24	RECTA	45.033	8494.917	360702.193	4618211.431			31.3729	0.4730989	0.8810093
	CLOT.	54.997	8539.950	360723.498	4618251.105		196.209	31.3729	360723.498	4618251.105
25	CIRC.	23.856	8594.947	360750.148	4618299.210	700.000		33.8738	361353.372	4617944.076
			8618.803	360762.599	4618319.558			36.0434		

Istram 20.08.08.26 11/02/21 10:12:07 200009 pagina 1
PROYECTO : ESTUDIO INFORMATIVO DE LA INTEGRACION DEL FFCC EN VALLADOLID
GRUPO : 9 : EJES ANCHO IB
EJE : 50 : VIA 1 IB - VIA 4 IB

* * * LISTADO DE LAS ALINEACIONES * * *

DATO	TIPO	LONGITUD	P.K.	X TANGENCIA	Y TANGENCIA	RADIO	PARAMETRO	AZIMUT	Cos/Xc/Xinf	Sen/Yc/Yinf
1	RECTA	61.163	244217.757	354447.172	4607541.789			20.4062	0.3150785	0.9490656
2	CIRC.	80.954	244278.920	354466.443	4607599.836	649996.133		20.4062	971355.432	4402800.059
3	RECTA	523.588	244359.874	354491.955	4607676.665			20.4141	0.3151967	0.9490264
4	CIRC.	83.787	244883.462	354656.988	4608173.564	-330003.867		20.4141	41474.613	4712189.679
5	CIRC.	143.616	244967.248	354683.387	4608253.083	499996.133		20.3979	829232.905	4450776.456
6	RECTA	295.233	245110.864	354728.639	4608389.383			20.4162	0.3152283	0.9490159
7	CIRC.	158.496	245406.096	354821.705	4608669.563	-500003.867		20.4162	-119689.901	4766284.928
8	RECTA	376.239	245564.592	354871.644	4608819.986			20.3960	0.3149274	0.9491157
9	CIRC.	89.800	245940.832	354990.132	4609177.081	-150003.867		20.3960	212619.099	4656417.416
10	CIRC.	95.034	246030.631	355018.387	4609262.320	149996.133		20.3579	497410.332	4562109.655
11	RECTA	616.388	246125.666	355048.290	4609352.527			20.3983	0.3149606	0.9491047
12	CIRC.	78.688	246742.053	355242.428	4609937.543	-300003.867		20.3983	70507.333	4704426.940
13	CIRC.	55.397	246820.741	355267.202	4610012.230	369996.133		20.3816	706462.842	4493570.138
14	RECTA	426.061	246876.139	355284.640	4610064.811			20.3911	0.3148538	0.9491402
15	CIRC.	82.042	247302.200	355418.787	4610469.203	99996.133		20.3911	450329.136	4578985.044
16	CIRC.	84.718	247384.242	355444.650	4610547.062	-100003.867		20.4433	260552.825	4642111.520
17	RECTA	83.342	247468.960	355471.356	4610627.460			20.3894	0.3148284	0.9491486
18	CIRC.	53.537	247552.302	355497.594	4610706.564	-40003.867		20.3894	317527.980	4623300.919
19	CIRC.	61.861	247605.839	355514.415	4610757.390	39996.133		20.3042	393493.506	4598216.287
20	RECTA	158.239	247667.700	355533.858	4610816.117			20.4027	0.3150262	0.9490830
	CLOT.	163.000	247825.939	355583.707	4610966.298		280.354	20.4027	355583.707	4610966.298
21	CIRC.	17.780	247988.939	355643.608	4611117.670	482.200		31.1626	356069.182	4610890.947
	CLOT.	5.000	248006.719	355652.255	4611133.205		183.560	33.5100	355620.115	4611071.178
22	CIRC.	44.048	248011.719	355654.790	4611137.515	450.000		34.1937	356041.425	4610907.268
	CLOT.	5.000	248055.768	355679.142	4611174.198		211.220	40.4253	355743.615	4611249.444
23	CIRC.	20.141	248060.768	355682.130	4611178.207	473.900		41.1148	356060.587	4610892.985
	CLOT.	20.000	248080.909	355694.591	4611194.029		790.423	43.8205	356901.355	4611130.239
24	CIRC.	141.012	248100.909	355707.616	4611209.204	481.200		46.4869	356066.125	4610888.230
	CLOT.	20.000	248241.921	355815.618	4611299.082		456.971	65.1425	355531.277	4610976.443
25	CIRC.	44.113	248261.921	355832.909	4611309.130	460.000		67.8494	356055.468	4610906.555
	CLOT.	20.000	248306.034	355872.478	4611328.591		95.917	73.9545	355890.941	4611336.280
26	RECTA	28.404	248326.034	355890.941	4611336.280			75.3384	0.9259009	0.3777664
27	CIRC.	38.546	248354.437	355917.240	4611347.010	250.000		75.3384	356011.681	4611115.535
28	CIRC.	44.828	248392.983	355953.908	4611358.768	-250.000		85.1540	355896.135	4611602.001
29	RECTA	249.368	248437.811	355996.363	4611372.972			73.7387	0.9161166	0.4009120
30	CIRC.	35.361	248687.179	356224.813	4611472.946	-1185.000		73.7387	355749.732	4612558.544
31	RECTA	64.831	248722.540	356256.992	4611487.604			71.8389	0.9037470	0.4280671
32	CIRC.	69.563	248787.371	356315.583	4611515.356	1900.000		71.8389	357128.910	4609798.237
33	RECTA	83.536	248856.934	356378.981	4611543.976			74.1697	0.9188102	0.3946997

Istram 20.08.08.26 11/02/21 10:12:07 200009 pagina 2
PROYECTO : ESTUDIO INFORMATIVO DE LA INTEGRACION DEL FFCC EN VALLADOLID
GRUPO : 9 : EJES ANCHO IB
EJE : 50 : VIA 1 IB - VIA 4 IB

* * * LISTADO DE LAS ALINEACIONES * * *

DATO	TIPO	LONGITUD	P.K.	X TANGENCIA	Y TANGENCIA	RADIO	PARAMETRO	AZIMUT	Cos/Xc/Xinf	Sen/Yc/Yinf
	CLOT.	20.000	248940.469	356455.734	4611576.948		109.545	74.1697	356455.734	4611576.948
34	CIRC.	29.035	248960.469	356474.066	4611584.944	-600.000		73.1087	356228.091	4612132.206
	CLOT.	20.000	248989.504	356500.250	4611597.483		109.545	70.0280	356517.972	4611606.752
35	RECTA	29.526	249009.504	356517.972	4611606.752			68.9670	0.8835228	0.4683882
	CLOT.	20.000	249039.030	356544.060	4611620.582		118.322	68.9670	356544.060	4611620.582
36	CIRC.	36.176	249059.030	356561.774	4611629.865	700.000		69.8764	356880.778	4611006.779
	CLOT.	20.000	249095.206	356594.386	4611645.512		118.322	73.1664	356612.713	4611653.520
37	RECTA	172.977	249115.206	356612.713	4611653.520			74.0759	0.9182275	0.3960535
	CLOT.	10.000	249288.183	356771.545	4611722.028		70.711	74.0759	356771.545	4611722.028
38	CIRC.	35.528	249298.183	356780.741	4611725.958	500.000		74.7125	356974.167	4611264.887
	CLOT.	10.000	249333.711	356813.963	4611738.527		70.711	79.2361	356823.457	4611741.668
39	RECTA	11.940	249343.711	356823.457	4611741.668			79.8727	0.9504369	0.3109176
39	CIRC.	29.338	249355.651	356834.805	4611745.381	-326.859		79.8727	356733.179	4612056.040
			249384.989	356862.243	4611755.741			74.1586		

Istram 20.08.08.26 11/02/21 10:09:30 200009 pagina 1
PROYECTO : ESTUDIO INFORMATIVO DE LA INTEGRACION DEL FFCC EN VALLADOLID
GRUPO : 9 : EJES ANCHO IB
EJE : 63 : VIA 2 IB - VIA 7 IB

* * * LISTADO DE LAS ALINEACIONES * * *

DATO	TIPO	LONGITUD	P.K.	X TANGENCIA	Y TANGENCIA	RADIO	PARAMETRO	AZIMUT	Cos/Xc/Xinf	Sen/Yc/Yinf
1	RECTA	81.864	0.000	355533.575	4610799.392			20.4027	0.3150268	0.9490828
2	CIRC.	25.926	81.864	355559.364	4610877.087	12500.000		20.4027	367422.899	4606939.253
3	CIRC.	25.902	107.790	355567.557	4610901.685	-12500.000		20.5347	343712.215	4614864.117
4	RECTA	49.294	133.692	355575.742	4610926.260			20.4028	0.3150286	0.9490822
5	CIRC.	20.186	182.986	355591.272	4610973.044	-400.000		20.4028	355211.639	4611099.055
6	CIRC.	32.223	203.172	355597.145	4610992.355	300.000		17.1901	355886.274	4610912.329
7	RECTA	36.030	235.395	355607.390	4611022.889			24.0279	0.3685327	0.9296148
8	CIRC.	14.866	271.425	355620.668	4611056.383	300.000		24.0279	355899.553	4610945.823
9	RECTA	38.197	286.292	355626.487	4611070.062			27.1827	0.4141284	0.9102185
10	CIRC.	27.369	324.489	355642.306	4611104.829	330.000		27.1827	355942.678	4610968.167
	CLOT.	50.000	351.857	355654.659	4611129.243		227.320	32.4626	355751.427	4611251.855
11	CIRC.	166.794	401.857	355681.942	4611171.103	484.800		40.5683	356071.594	4610882.654
	CLOT.	50.000	568.651	355802.070	4611285.628		296.468	62.4710	355665.288	4611167.063
12	CIRC.	25.388	618.651	355845.105	4611311.028	380.000		69.9422	356017.928	4610972.602
13	RECTA	50.284	644.039	355868.084	4611321.811			74.1955	0.9189701	0.3943272
14	CIRC.	46.395	694.324	355914.294	4611341.639	250.000		74.1955	356012.876	4611111.897
15	CIRC.	36.106	740.718	355958.378	4611355.884	-400.000		86.0098	355871.181	4611746.265
16	RECTA	87.967	776.825	355993.213	4611365.334			80.2633	0.9523267	0.3050802
17	CIRC.	40.720	864.792	356076.986	4611392.171	-400.000		80.2633	355954.954	4611773.102
18	RECTA	317.815	905.511	356115.066	4611406.544			73.7826	0.9163931	0.4002794
19	CIRC.	57.729	1223.326	356406.309	4611533.759	-750.000		73.7826	356106.100	4612221.054
20	RECTA	207.176	1281.055	356458.270	4611558.879			68.8824	0.8829001	0.4695609
21	CIRC.	18.678	1488.232	356641.187	4611656.161	-700.000		68.8824	356312.494	4612274.191
22	RECTA	2.202	1506.909	356657.558	4611665.150			67.1838	0.8700582	0.4929491
			1509.112	356659.474	4611666.236			67.1838		

PUNTOS SINGULARES EN PLANTA ANCHO 1.435 mm

Istram 20.08.08.26 11/02/21 09:32:39 200009 pagina 1
PROYECTO : ESTUDIO INFORMATIVO DE LA INTEGRACION DEL FFCC EN VALLADOLID
GRUPO : 1 : ALTERNATIVA 1
EJE : 1 : VIA 1 UIC

* * * LISTADO DE LAS ALINEACIONES * * *

DATO	TIPO	LONGITUD	P.K.	X TANGENCIA	Y TANGENCIA	RADIO	PARAMETRO	AZIMUT	Cos/Xc/Xinf	Sen/Yc/Yinf
1	RECTA	61.163	174874.848	354443.502	4607543.007			20.4062	0.3150785	0.9490656
2	CIRC.	80.954	174936.011	354462.773	4607601.055	650000.000		20.4062	971355.432	4402800.059
3	RECTA	523.588	175016.965	354488.285	4607677.884			20.4141	0.3151967	0.9490264
4	CIRC.	83.786	175540.553	354653.318	4608174.783	-330000.000		20.4141	41474.613	4712189.679
5	CIRC.	143.617	175624.339	354679.717	4608254.301	500000.000		20.3979	829232.905	4450776.456
6	RECTA	295.233	175767.955	354724.969	4608390.602			20.4162	0.3152283	0.9490159
7	CIRC.	158.495	176063.188	354818.035	4608670.782	-500000.000		20.4162	-119689.901	4766284.928
8	RECTA	376.239	176221.683	354867.973	4608821.204			20.3960	0.3149274	0.9491157
9	CIRC.	89.798	176597.922	354986.461	4609178.299	-150000.000		20.3960	212619.099	4656417.416
10	CIRC.	95.037	176687.719	355014.716	4609263.535	150000.000		20.3579	497410.332	4562109.655
11	RECTA	616.388	176782.756	355044.620	4609353.745			20.3983	0.3149606	0.9491047
12	CIRC.	78.687	177399.144	355238.758	4609938.761	-300000.000		20.3983	70507.333	4704426.940
13	CIRC.	55.398	177477.831	355263.531	4610013.447	370000.000		20.3816	706462.842	4493570.138
14	RECTA	426.061	177533.229	355280.969	4610066.028			20.3911	0.3148538	0.9491402
15	CIRC.	82.046	177959.290	355415.116	4610470.420	100000.000		20.3911	450329.136	4578985.044
16	CIRC.	84.714	178041.335	355440.981	4610548.282	-100000.000		20.4433	260552.825	4642111.520
17	RECTA	83.342	178126.050	355467.685	4610628.677			20.3894	0.3148284	0.9491486
18	CIRC.	56.330	178209.392	355493.924	4610707.782	-40000.000		20.3894	317527.980	4623300.919
19	CIRC.	63.016	178265.722	355511.620	4610761.260	40000.000		20.2997	393495.261	4598221.600
20	RECTA	159.397	178328.738	355531.422	4610821.083			20.4000	0.3149871	0.9490960
	CLOT.	150.000	178488.135	355581.630	4610972.366		269.165	20.4000	355581.630	4610972.366
21	CIRC.	305.786	178638.135	355636.121	4611111.947	483.000		30.2854	356065.489	4610890.742
	CLOT.	50.000	178943.921	355850.208	4611323.111		155.403	70.5897	355895.703	4611343.837
22	RECTA	84.478	178993.921	355895.703	4611343.837			73.8849	0.9170348	0.3988072
23	CIRC.	21.801	179078.400	355973.173	4611377.527	13000.000		73.8849	361157.666	4599456.075
24	CIRC.	20.324	179100.200	355993.172	4611386.205	-6700.000		73.9916	353331.471	4617534.810
25	RECTA	72.547	179120.524	356011.811	4611394.307			73.7985	0.9164930	0.4000507
26	CIRC.	26.568	179193.071	356078.299	4611423.329	50000.000		73.7985	376080.834	4565598.678
27	CIRC.	75.698	179219.639	356102.652	4611433.951	-90000.000		73.8323	320141.924	4693937.442
28	RECTA	90.332	179295.336	356172.031	4611464.226			73.7788	0.9163691	0.4003345
29	CIRC.	69.081	179385.669	356254.809	4611500.390	100000.000		73.7788	396288.262	4519863.483
30	CIRC.	98.741	179454.750	356318.122	4611528.023	-100000.000		73.8228	316347.982	4703192.563
31	RECTA	47.048	179553.490	356408.613	4611567.535			73.7599	0.9162503	0.4006063
	CLOT.	20.000	179600.539	356451.721	4611586.383		109.545	73.7599	356451.721	4611586.383
32	CIRC.	22.313	179620.539	356470.001	4611594.496	-600.000		72.6989	356220.509	4612140.164
	CLOT.	20.000	179642.851	356490.116	4611604.149		109.545	70.3314	356507.882	4611613.334
	CLOT.	20.000	179662.851	356507.882	4611613.334		100.000	69.2704	356507.882	4611613.334
33	CIRC.	34.475	179682.851	356525.658	4611622.499	500.000		70.5436	356748.841	4611175.074
	CLOT.	20.000	179717.326	356557.014	4611636.812		100.000	74.9332	356575.584	4611644.238

Istram 20.08.08.26 11/02/21 09:32:39 200009 pagina 2
PROYECTO : ESTUDIO INFORMATIVO DE LA INTEGRACION DEL FFCC EN VALLADOLID
GRUPO : 1 : ALTERNATIVA 1
EJE : 1 : VIA 1 UIC

* * * LISTADO DE LAS ALINEACIONES * * *

DATO	TIPO	LONGITUD	P.K.	X TANGENCIA	Y TANGENCIA	RADIO	PARAMETRO	AZIMUT	Cos/Xc/Xinf	Sen/Yc/Yinf
34	RECTA	42.364	179737.326	356575.584	4611644.238			76.2064	0.9309652	0.3651080
	CLOT.	19.000	179779.690	356615.023	4611659.706		147.817	76.2064	356615.023	4611659.706
35	CIRC.	19.375	179798.690	356632.692	4611666.691	-1150.000		75.6805	356203.988	4612733.796
	CLOT.	19.000	179818.066	356650.609	4611674.065		147.817	74.6079	356668.077	4611681.541
36	RECTA	130.692	179837.066	356668.077	4611681.541			74.0820	0.9182656	0.3959651
37	CIRC.	24.081	179967.757	356788.087	4611733.290	200000.000		74.0820	435981.099	4428080.175
38	CIRC.	26.095	179991.838	356810.200	4611742.824	-150000.000		74.0897	297432.026	4749489.811
39	RECTA	55.953	180017.934	356834.163	4611753.156			74.0786	0.9182444	0.3960142
	CLOT.	20.000	180073.886	356885.541	4611775.314		189.737	74.0786	356885.541	4611775.314
40	CIRC.	35.804	180093.886	356903.920	4611783.200	1800.000		74.4323	357607.553	4610126.426
	CLOT.	20.000	180129.691	356937.013	4611796.868		189.737	75.6986	356955.601	4611804.249
	CLOT.	20.000	180149.691	356955.601	4611804.249		134.164	76.0523	356955.601	4611804.249
41	CIRC.	91.577	180169.691	356974.175	4611811.665	-900.000		75.3449	356634.270	4612645.011
	CLOT.	20.000	180261.268	357057.065	4611850.502		444.972	68.8672	357242.099	4611969.238
42	CIRC.	134.292	180281.268	357074.619	4611860.087	-990.000		67.5168	356591.111	4612723.986
	CLOT.	42.884	180415.560	357187.005	4611933.409		1280.151	58.8811	355588.567	4611794.214
43	CIRC.	137.028	180458.444	357220.676	4611959.962	-965.000		56.0877	356606.587	4612704.354
	CLOT.	60.000	180595.473	357319.843	4612054.361		3351.507	47.0478	360681.158	4611780.464
44	CIRC.	131.167	180655.473	357358.855	4612099.934	-970.000		43.0998	356602.789	4612707.605
	CLOT.	90.000	180786.639	357433.874	4612207.407		295.466	34.4912	357477.873	4612285.909
45	RECTA	122.811	180876.639	357477.873	4612285.909			31.5378	0.4753789	0.8797812
	CLOT.	20.000	180999.450	357536.255	4612393.955		1356.466	31.5378	357536.255	4612393.955
46	CIRC.	30.591	181019.450	357545.763	4612411.551	92000.000		31.5447	438480.876	4568667.895
	CLOT.	20.000	181050.041	357560.313	4612438.460		1356.466	31.5659	357569.830	4612456.051
47	RECTA	81.007	181070.041	357569.830	4612456.051			31.5728	0.4758626	0.8795196
	CLOT.	20.000	181151.048	357608.378	4612527.299		1886.796	31.5728	357608.378	4612527.299
48	CIRC.	39.281	181171.048	357617.895	4612544.889	-178000.000		31.5692	201058.644	4697239.640
	CLOT.	20.000	181210.329	357636.581	4612579.441		1886.796	31.5552	357646.093	4612597.034
49	RECTA	44.043	181230.329	357646.093	4612597.034			31.5516	0.4755697	0.8796781
	CLOT.	50.000	181274.372	357667.039	4612635.778		8366.600	31.5516	357667.039	4612635.778
50	CIRC.	801.143	181324.372	357690.817	4612679.762	1400000.000		31.5527	1589228.205	3946860.220
	CLOT.	50.000	182125.515	358072.031	4613384.393		8366.600	31.5892	358095.836	4613428.363
51	RECTA	322.857	182175.515	358095.836	4613428.363			31.5903	0.4761044	0.8793888
	CLOT.	25.000	182498.372	358249.549	4613712.280		1936.492	31.5903	358249.549	4613712.280
52	CIRC.	122.164	182523.372	358261.451	4613734.265	-150000.000		31.5850	226347.186	4685138.932
	CLOT.	25.000	182645.536	358319.561	4613841.723		1936.492	31.5332	358331.443	4613863.719
	CLOT.	25.000	182670.536	358331.443	4613863.719		1968.502	31.5279	358331.443	4613863.719
53	CIRC.	92.241	182695.536	358343.325	4613885.715	155000.000		31.5330	494714.978	4540212.299
	CLOT.	25.000	182787.777	358387.192	4613966.857		1968.502	31.5709	358399.089	4613988.845

Istram 20.08.08.26 11/02/21 09:32:39 200009 pagina 3
PROYECTO : ESTUDIO INFORMATIVO DE LA INTEGRACION DEL FFCC EN VALLADOLID
GRUPO : 1 : ALTERNATIVA 1
EJE : 1 : VIA 1 UIC

* * * LISTADO DE LAS ALINEACIONES * * *

DATO	TIPO	LONGITUD	P.K.	X TANGENCIA	Y TANGENCIA	RADIO	PARAMETRO	AZIMUT	Cos/Xc/Xinf	Sen/Yc/Yinf
54	RECTA	588.052	182812.777	358399.089	4613988.845			31.5760	0.4759068	0.8794957
	CLOT.	40.000	183400.829	358678.947	4614506.034		6324.555	31.5760	358678.947	4614506.034
55	CIRC.	159.408	183440.829	358697.984	4614541.214	1000000.000		31.5773	1238184.190	4138616.836
	CLOT.	40.000	183600.237	358773.861	4614681.405		6324.555	31.5874	358792.904	4614716.581
56	RECTA	1165.882	183640.237	358792.904	4614716.581			31.5887	0.4760822	0.8794008
	CLOT.	30.000	184806.119	359347.960	4615741.859		6708.204	31.5887	359347.960	4615741.859
57	CIRC.	131.525	184836.119	359362.242	4615768.241	-1500000.000		31.5881	-959746.110	5329878.285
	CLOT.	30.000	184967.644	359424.852	4615883.907		6708.204	31.5825	359439.132	4615910.291
58	RECTA	1159.433	184997.644	359439.132	4615910.291			31.5818	0.4759875	0.8794521
	CLOT.	20.000	186157.077	359991.008	4616929.957		3714.835	31.5818	359991.008	4616929.957
59	CIRC.	118.140	186177.077	360000.528	4616947.546	690000.000		31.5828	966817.695	4288507.406
	CLOT.	20.000	186295.217	360056.771	4617051.438		3714.835	31.5937	360066.294	4617069.025
60	RECTA	1236.093	186315.217	360066.294	4617069.025			31.5946	0.4761635	0.8793568
	CLOT.	205.000	187551.310	360654.877	4618155.993		803.586	31.5946	360654.877	4618155.993
61	CIRC.	0.000	187756.310	360754.435	4618335.183	3150.000		33.6661	363474.145	4616745.944
62	CIRC.	0.000	187756.310	360754.435	4618335.183	3150.000		33.6661	363474.145	4616745.944
			187756.310	360754.435	4618335.183			33.6661		

Istram 20.08.08.26 11/02/21 09:34:55 200009 pagina 1
PROYECTO : ESTUDIO INFORMATIVO DE LA INTEGRACION DEL FFCC EN VALLADOLID
GRUPO : 1 : ALTERNATIVA 1
EJE : 2 : VIA 2 UIC

* * * LISTADO DE LAS ALINEACIONES * * *

DATO	TIPO	LONGITUD	P.K.	X TANGENCIA	Y TANGENCIA	RADIO	PARAMETRO	AZIMUT	Cos/Xc/Xinf	Sen/Yc/Yinf
1	RECTA	1985.294	174876.679	354437.426	4607545.024			20.4056	0.3150706	0.9490682
	CLOT.	40.000	176861.973	355062.933	4609429.204		774.597	20.4056	355062.933	4609429.204
2	CIRC.	88.323	176901.973	355075.519	4609467.172	-15000.000		20.3208	340833.207	4614174.245
	CLOT.	40.000	176990.296	355102.988	4609551.115		774.597	19.9459	355115.283	4609589.178
	CLOT.	40.000	177030.296	355115.283	4609589.178		774.597	19.8610	355115.283	4609589.178
3	CIRC.	84.199	177070.296	355127.577	4609627.242	15000.000		19.9459	369397.359	4605004.111
	CLOT.	40.000	177154.495	355153.753	4609707.269		774.597	20.3033	355166.328	4609745.240
4	RECTA	396.954	177194.495	355166.328	4609745.240			20.3881	0.3148096	0.9491548
	CLOT.	40.000	177591.449	355291.293	4610122.011		632.456	20.3881	355291.293	4610122.011
5	CIRC.	87.605	177631.449	355303.911	4610159.969	10000.000		20.5155	364789.144	4606992.896
	CLOT.	40.000	177719.054	355332.020	4610242.942		632.456	21.0732	355345.070	4610280.753
	CLOT.	37.355	177759.054	355345.070	4610280.753		333.128	21.2005	355345.070	4610280.753
6	CIRC.	0.000	177796.409	355357.208	4610316.082	-2970.800		20.8003	352543.572	4611269.552
	CLOT.	37.355	177796.409	355357.208	4610316.082		333.128	20.8003	355369.048	4610351.510
7	RECTA	640.530	177833.764	355369.048	4610351.510			20.4000	0.3149866	0.9490961
	CLOT.	182.500	178474.294	355570.806	4610959.434		296.773	20.4000	355570.806	4610959.434
8	CIRC.	278.201	178656.794	355638.975	4611128.412	482.600		32.4372	356060.274	4610893.019
	CLOT.	72.000	178934.995	355835.363	4611320.006		186.406	69.1360	355900.639	4611350.345
9	RECTA	90.774	179006.995	355900.639	4611350.345			73.8850	0.9170354	0.3988058
10	CIRC.	166.458	179097.769	355983.883	4611386.547	-100000.000		73.8850	316103.305	4703090.088
11	RECTA	128.863	179264.227	356136.475	4611453.058			73.7790	0.9163703	0.4003317
12	CIRC.	54.322	179393.090	356254.561	4611504.646	50000.000		73.7790	376271.146	4565686.131
13	CIRC.	104.126	179447.412	356304.352	4611526.366	-100000.000		73.8481	316370.764	4703206.835
14	RECTA	45.598	179551.538	356399.794	4611567.997			73.7819	0.9163884	0.4002903
	CLOT.	20.000	179597.136	356441.579	4611586.249		109.545	73.7819	356441.579	4611586.249
15	CIRC.	20.102	179617.136	356459.862	4611594.356	-600.000		72.7208	356210.557	4612140.110
	CLOT.	20.000	179637.238	356478.003	4611603.013		109.545	70.5880	356495.806	4611612.126
	CLOT.	20.000	179657.238	356495.806	4611612.126		109.545	69.5269	356495.806	4611612.126
16	CIRC.	19.468	179677.238	356513.608	4611621.240	600.000		70.5880	356781.054	4611084.143
	CLOT.	20.000	179696.706	356531.173	4611629.633		109.545	72.6536	356549.447	4611637.760
17	RECTA	41.657	179716.706	356549.447	4611637.760			73.7146	0.9159649	0.4012584
18	CIRC.	34.289	179758.362	356587.603	4611654.475	380.000		73.7146	356740.081	4611306.408
19	CIRC.	42.230	179792.651	356619.589	4611666.799	-500.000		79.4591	356461.046	4612140.997
20	RECTA	138.759	179834.881	356659.027	4611681.864			74.0822	0.9182667	0.3959624
21	CIRC.	29.684	179973.641	356786.445	4611736.807	-50000.000		74.0822	336988.326	4657650.144
22	CIRC.	26.350	180003.324	356813.699	4611748.569	50000.000		74.0444	376639.072	4565846.994
23	RECTA	80.001	180029.674	356837.892	4611759.011			74.0780	0.9182403	0.3960236
			180109.676	356911.352	4611790.693			74.0780		

Istram 20.08.08.26 11/02/21 09:36:14 200009 pagina 1
PROYECTO : ESTUDIO INFORMATIVO DE LA INTEGRACION DEL FFCC EN VALLADOLID
GRUPO : 1 : ALTERNATIVA 1
EJE : 23 : VIA 2 UIC TRAMO CABECERA NORTE

* * * LISTADO DE LAS ALINEACIONES * * *

DATO	TIPO	LONGITUD	P.K.	X TANGENCIA	Y TANGENCIA	RADIO	PARAMETRO	AZIMUT	Cos/Xc/Xinf	Sen/Yc/Yinf
1	RECTA	15.079	0.000	356910.427	4611790.293			74.0780	0.9182405	0.3960231
	CLOT.	140.301	15.079	356924.273	4611796.265		367.000	74.0780	356924.273	4611796.265
2	CIRC.	498.767	155.380	357051.682	4611854.934	-960.000		69.4260	356608.156	4612706.336
	CLOT.	140.301	654.148	357415.867	4612187.488		367.000	36.3505	357485.840	4612309.056
3	RECTA	1.529	794.449	357485.840	4612309.056			31.6985	0.4775976	0.8785787
4	CIRC.	21.809	795.978	357486.571	4612310.400	250.000		31.6985	357706.215	4612191.001
5	RECTA	18.624	817.787	357497.808	4612329.082			37.2520	0.5523268	0.8336277
			836.411	357508.095	4612344.608			37.2520		

Istram 20.08.08.26 11/02/21 09:37:29 200009 pagina 1
PROYECTO : ESTUDIO INFORMATIVO DE LA INTEGRACION DEL FFCC EN VALLADOLID
GRUPO : 1 : ALTERNATIVA 1
EJE : 42 : VIA 2 BIFURCACION NORTE

* * * LISTADO DE LAS ALINEACIONES * * *

DATO	TIPO	LONGITUD	P.K.	X TANGENCIA	Y TANGENCIA	RADIO	PARAMETRO	AZIMUT	Cos/Xc/Xinf	Sen/Yc/Yinf
1	RECTA	4.593	0.000	360664.074	4618168.041			32.9210	0.4943805	0.8692456
	CLOT.	330.681	4.593	360666.345	4618172.033		995.623	32.9210	360666.345	4618172.033
2	CIRC.	389.916	335.273	360835.061	4618456.384	2997.650		36.4324	363355.093	4616833.009
			725.190	361066.913	4618769.537			44.7132		

Istram 20.08.08.26 11/02/21 09:35:24 200009 pagina 1
PROYECTO : ESTUDIO INFORMATIVO DE LA INTEGRACION DEL FFCC EN VALLADOLID
GRUPO : 1 : ALTERNATIVA 1
EJE : 32 : VIA 3 UIC

* * * LISTADO DE LAS ALINEACIONES * * *

DATO	TIPO	LONGITUD	P.K.	X TANGENCIA	Y TANGENCIA	RADIO	PARAMETRO	AZIMUT	Cos/Xc/Xinf	Sen/Yc/Yinf
1	RECTA	3.247	179028.926	355927.914	4611355.732			80.8596	0.9551424	0.2961471
2	CIRC.	19.483	179032.173	355931.016	4611356.694	250.000		80.8596	356005.053	4611117.908
3	CIRC.	47.439	179051.657	355949.831	4611361.733	-250.000		85.8210	355894.610	4611605.558
4	RECTA	250.385	179099.096	355994.830	4611376.526			73.7408	0.9161301	0.4008811
5	CIRC.	35.917	179349.481	356224.216	4611476.900	-1100.000		73.7408	355783.247	4612484.643
6	CIRC.	33.886	179385.398	356256.879	4611491.833	8000.000		71.6621	359701.481	4604271.396
7	RECTA	24.376	179419.284	356287.495	4611506.359			71.9318	0.9043704	0.4267484
	CLOT.	20.000	179443.660	356309.539	4611516.761		189.737	71.9318	356309.539	4611516.761
8	CIRC.	42.401	179463.660	356327.642	4611525.263	1800.000		72.2855	357086.734	4609893.154
	CLOT.	20.000	179506.061	356366.296	4611542.690		189.737	73.7851	356384.653	4611550.627
9	RECTA	73.871	179526.061	356384.653	4611550.627			74.1388	0.9186183	0.3951460
	CLOT.	20.000	179599.933	356452.513	4611579.817		109.545	74.1388	356452.513	4611579.817
10	CIRC.	26.249	179619.933	356470.841	4611587.821	-600.000		73.0778	356224.601	4612134.965
	CLOT.	20.000	179646.182	356494.534	4611599.114		109.545	70.2927	356512.295	4611608.310
11	RECTA	76.857	179666.182	356512.295	4611608.310			69.2316	0.8854624	0.4647111
			179743.039	356580.349	4611644.026			69.2316		

PUNTOS SINGULARES EN ALZADO ANCHO 1.668 mm

Istram 20.08.08.26 11/02/21 10:41:09 200009 pagina 1
PROYECTO : ESTUDIO INFORMATIVO DE LA INTEGRACION DEL FFCC EN VALLADOLID
GRUPO : 9 : EJES ANCHO IB
EJE : 14 : VIA 11 IB

* * * ESTADO DE RASANTES * * *

PENDIENTE	LONGITUD	PARAMETRO	VÉRTICE		ENTRADA AL ACUERDO		SALIDA DEL ACUERDO		BISECT.	DIF.PEN
(o/oo)	(m.)	(kv)	PK	Z	PK	Z	PK	Z	(m.)	(%)
					-38.261	692.183				
0.767614	20.000	6562.510	12.963	692.222	2.963	692.215	22.963	692.200	0.008	-0.305
-2.280000	25.000	7504.714	235.144	691.716	222.644	691.744	247.644	691.729	0.010	0.333
1.051239							681.538	692.185		

Istram 20.08.08.26 11/02/21 10:38:45 200009 pagina 1
PROYECTO : ESTUDIO INFORMATIVO DE LA INTEGRACION DEL FFCC EN VALLADOLID
GRUPO : 9 : EJES ANCHO IB
EJE : 16 : VIA 6 IB

* * * ESTADO DE RASANTES * * *

PENDIENTE	LONGITUD	PARAMETRO	VÉRTICE		ENTRADA AL ACUERDO		SALIDA DEL ACUERDO		BISECT.	DIF.PEN
(o/oo)	(m.)	(kv)	PK	Z	PK	Z	PK	Z	(m.)	(%)
					-38.261	692.022				
-1.818280	25.000	19059.525	28.903	691.900	16.403	691.923	41.403	691.894	0.004	0.131
-0.506600	25.000	8827.476	259.979	691.783	247.479	691.789	272.479	691.812	0.009	0.283
2.325467	25.000	19616.893	369.200	692.037	356.700	692.008	381.700	692.050	0.004	-0.127
1.051055							628.627	692.310		

Istram 20.08.08.26 11/02/21 10:40:02 200009 pagina 1
PROYECTO : ESTUDIO INFORMATIVO DE LA INTEGRACION DEL FFCC EN VALLADOLID
GRUPO : 9 : EJES ANCHO IB
EJE : 18 : VIA 8 IB

* * * ESTADO DE RASANTES * * *

PENDIENTE	LONGITUD	PARAMETRO	VÉRTICE		ENTRADA AL ACUERDO		SALIDA DEL ACUERDO		BISECT.	DIF.PEN
(o/oo)	(m.)	(kv)	PK	Z	PK	Z	PK	Z	(m.)	(%)
					-34.321	692.111				
-2.293098	25.000	7475.728	137.098	691.718	124.598	691.746	149.598	691.731	0.010	0.334
1.051058							536.809	692.138		

Istram 20.08.08.26 11/02/21 10:40:25 200009 pagina 1
PROYECTO : ESTUDIO INFORMATIVO DE LA INTEGRACION DEL FFCC EN VALLADOLID
GRUPO : 9 : EJES ANCHO IB
EJE : 19 : VIA 9 IB

* * * ESTADO DE RASANTES * * *

PENDIENTE	LONGITUD	PARAMETRO	VÉRTICE		ENTRADA AL ACUERDO		SALIDA DEL ACUERDO		BISECT.	DIF.PEN
(o/oo)	(m.)	(kv)	PK	Z	PK	Z	PK	Z	(m.)	(%)
					-34.321	692.032				
-2.293125	25.000	7459.689	104.026	691.715	91.526	691.744	116.526	691.728	0.010	0.335
1.058221							476.837	692.110		

Istram 20.08.08.26 11/02/21 10:40:48 200009 pagina 1
PROYECTO : ESTUDIO INFORMATIVO DE LA INTEGRACION DEL FFCC EN VALLADOLID
GRUPO : 9 : EJES ANCHO IB
EJE : 20 : VIA 10 IB

* * * ESTADO DE RASANTES * * *

PENDIENTE	LONGITUD	PARAMETRO	VÉRTICE		ENTRADA AL ACUERDO		SALIDA DEL ACUERDO		BISECT.	DIF.PEN
(o/oo)	(m.)	(kv)	PK	Z	PK	Z	PK	Z	(m.)	(%)
					-34.321	691.954				
-2.305597	25.000	7444.130	69.196	691.715	56.696	691.744	81.696	691.728	0.010	0.336
1.052754							409.075	692.073		

Istram 20.08.08.26 11/02/21 10:37:29 200009 pagina 1
PROYECTO : ESTUDIO INFORMATIVO DE LA INTEGRACION DEL FFCC EN VALLADOLID
GRUPO : 9 : EJES ANCHO IB
EJE : 21 : VIA 4 IB

* * * ESTADO DE RASANTES * * *

PENDIENTE	LONGITUD	PARAMETRO	VÉRTICE		ENTRADA AL ACUERDO		SALIDA DEL ACUERDO		BISECT.	DIF.PEN
(o/oo)	(m.)	(kv)	PK	Z	PK	Z	PK	Z	(m.)	(%)
					0.000	691.795				
-0.041550	25.000	10244.992	32.681	691.793	20.181	691.794	45.181	691.823	0.008	0.244
2.398667	25.000	18342.440	136.482	692.042	123.982	692.012	148.982	692.055	0.004	-0.136
1.035707							231.848	692.141		

Istram 20.08.08.26 11/02/21 10:43:17 *200009* pagina 1
PROYECTO : ESTUDIO INFORMATIVO DE LA INTEGRACION DEL FFCC EN VALLADOLID
GRUPO : 9 : EJES ANCHO IB
EJE : 37 : VIA 8 IB (TRES HERMANOS)

* * * ESTADO DE RASANTES * * *

PENDIENTE	LONGITUD	PARAMETRO	VÉRTICE		ENTRADA AL ACUERDO		SALIDA DEL ACUERDO		BISECT.	DIF.PEN
(o/oo)	(m.)	(kv)	PK	Z	PK	Z	PK	Z	(m.)	(%)
					-38.353	697.102				
0.390853	15.000	4700.937	8.701	697.120	1.201	697.117	16.201	697.099	0.006	-0.319
-2.800000	15.000	4688.396	42.315	697.026	34.815	697.047	49.815	697.029	0.006	0.320
0.399388	149.769	374996.330	602.819	697.250	527.935	697.220	677.704	697.250	0.007	-0.040
0.000000	15.000	5357.143	856.189	697.250	848.689	697.250	863.689	697.271	0.005	0.280
2.800000	15.000	5357.143	891.894	697.350	884.394	697.329	899.394	697.350	0.005	-0.280
0.000000							936.988	697.350		

Istram 20.08.08.26 11/02/21 10:42:00 *200009* pagina 1
PROYECTO : ESTUDIO INFORMATIVO DE LA INTEGRACION DEL FFCC EN VALLADOLID
GRUPO : 9 : EJES ANCHO IB
EJE : 38 : VIA MANGO 1 IB (TRES HERMANOS)

* * * ESTADO DE RASANTES * * *

PENDIENTE	LONGITUD	PARAMETRO	VÉRTICE		ENTRADA AL ACUERDO		SALIDA DEL ACUERDO		BISECT.	DIF.PEN
(o/oo)	(m.)	(kv)	PK	Z	PK	Z	PK	Z	(m.)	(%)
					-0.003	697.029				
-0.400000							99.997	696.989		

Istram 20.08.08.26 11/02/21 10:43:44 *200009* pagina 1
PROYECTO : ESTUDIO INFORMATIVO DE LA INTEGRACION DEL FFCC EN VALLADOLID
GRUPO : 9 : EJES ANCHO IB
EJE : 39 : VIA MANGO 2 (TRES HERMANOS)

* * * ESTADO DE RASANTES * * *

PENDIENTE	LONGITUD	PARAMETRO	VÉRTICE		ENTRADA AL ACUERDO		SALIDA DEL ACUERDO		BISECT.	DIF.PEN
(o/oo)	(m.)	(kv)	PK	Z	PK	Z	PK	Z	(m.)	(%)
					0.001	697.250				
0.060000							100.001	697.256		

Istram 20.08.08.26 11/02/21 10:42:32 *200009* pagina 1
PROYECTO : ESTUDIO INFORMATIVO DE LA INTEGRACION DEL FFCC EN VALLADOLID
GRUPO : 9 : EJES ANCHO IB
EJE : 40 : VIA 4 IB (TRES HERMANOS)

* * * ESTADO DE RASANTES * * *

PENDIENTE	LONGITUD	PARAMETRO	VÉRTICE		ENTRADA AL ACUERDO		SALIDA DEL ACUERDO		BISECT.	DIF.PEN
(o/oo)	(m.)	(kv)	PK	Z	PK	Z	PK	Z	(m.)	(%)
					-37.093	697.052				
0.399705	150.331	376104.545	457.199	697.250	382.034	697.220	532.364	697.250	0.008	-0.040
0.000000							660.447	697.250		

Istram 20.08.08.26 11/02/21 10:42:55 *200009* pagina 1
PROYECTO : ESTUDIO INFORMATIVO DE LA INTEGRACION DEL FFCC EN VALLADOLID
GRUPO : 9 : EJES ANCHO IB
EJE : 41 : VIA 6 IB (TRES HERMANOS)

* * * ESTADO DE RASANTES * * *

PENDIENTE	LONGITUD	PARAMETRO	VÉRTICE		ENTRADA AL ACUERDO		SALIDA DEL ACUERDO		BISECT.	DIF.PEN
(o/oo)	(m.)	(kv)	PK	Z	PK	Z	PK	Z	(m.)	(%)
					-37.093	697.072				
0.399593	149.232	373460.314	408.766	697.250	334.150	697.220	483.382	697.250	0.007	-0.040
0.000000							556.456	697.250		

Istram 20.08.08.26 11/02/21 10:38:13 200009 pagina 1
PROYECTO : ESTUDIO INFORMATIVO DE LA INTEGRACION DEL FFCC EN VALLADOLID
GRUPO : 9 : EJES ANCHO IB
EJE : 49 : VIA 5 IB - VIA 1 IB

* * * ESTADO DE RASANTES * * *

PENDIENTE	LONGITUD	PARAMETRO	VÉRTICE		ENTRADA AL ACUERDO		SALIDA DEL ACUERDO		BISECT.	DIF.PEN
(o/oo)	(m.)	(kv)	PK	Z	PK	Z	PK	Z	(m.)	(%)
					-34.321	692.045				
-1.354456	40.000	177240.026	30.322	691.957	10.322	691.985	50.322	691.935	0.001	0.023
-1.128773	50.000	14164.919	265.444	691.692	240.444	691.720	290.444	691.752	0.022	0.353
2.401074	50.000	36741.724	410.805	692.041	385.805	691.981	435.805	692.067	0.009	-0.136
1.040224	50.002	58812.492	816.438	692.463	791.437	692.437	841.439	692.510	0.005	0.085
1.890423	49.999	15810.890	958.205	692.731	933.206	692.684	983.205	692.857	0.020	0.316
5.052732	100.609	77169.041	1260.897	694.260	1210.592	694.006	1311.201	694.449	0.016	-0.130
3.748984	79.996	76328.603	1476.844	695.070	1436.846	694.920	1516.842	695.262	0.010	0.105
4.797034	101.968	111780.771	1712.406	696.200	1661.422	695.955	1763.390	696.398	0.012	-0.091
3.884823	80.010	14674.766	1923.998	697.022	1883.993	696.867	1964.003	696.959	0.055	-0.545
-1.567394	119.998	47092.869	2139.643	696.684	2079.644	696.778	2199.642	696.743	0.038	0.255
0.980717	99.999	65205.127	2492.446	697.030	2442.446	696.981	2542.446	697.002	0.019	-0.153
-0.552894	79.999	93916.702	2986.212	696.757	2946.212	696.779	3026.212	696.769	0.009	0.085
0.298916	80.007	158128.565	3160.174	696.809	3120.171	696.797	3200.177	696.801	0.005	-0.051
-0.207043	133.000	188107.399	3649.745	696.708	3583.245	696.721	3716.245	696.741	0.012	0.071
0.500000	133.000	1215486.209	3977.844	696.872	3911.344	696.838	4044.344	696.898	0.002	-0.011
0.390579	180.081	461063.143	5202.469	697.350	5112.428	697.315	5292.510	697.350	0.009	-0.039
0.000000	180.002	133923.337	5632.469	697.350	5542.468	697.350	5722.470	697.471	0.030	0.134
1.344071	179.998	127500.076	6071.434	697.940	5981.435	697.819	6161.433	697.934	0.032	-0.141
-0.067678	180.555	2042613.764	6662.469	697.900	6572.191	697.906	6752.746	697.902	0.002	0.009
0.020716	180.015	84152.000	8303.725	697.934	8213.718	697.932	8393.732	698.128	0.048	0.214
2.159878	120.118	57286.278	8642.170	698.665	8582.111	698.535	8702.229	698.669	0.031	-0.210
0.063075	79.932	11923.447	8879.983	698.680	8840.017	698.677	8919.949	698.415	0.067	-0.670
-6.640708	79.948	7860.308	9012.499	697.800	8972.525	698.065	9052.473	697.941	0.102	1.017
3.530400	79.932	18204.708	9169.705	698.355	9129.739	698.214	9209.671	698.321	0.044	-0.439
-0.860333	119.889	139351.361	9762.499	697.845	9702.554	697.897	9822.443	697.845	0.013	0.086
0.000000	80.000	277584.220	10000.103	697.845	9960.103	697.845	10040.103	697.833	0.003	-0.029
-0.288200							10090.318	697.819		

Istram 20.08.08.26 11/02/21 10:36:40 200009 pagina 1
PROYECTO : ESTUDIO INFORMATIVO DE LA INTEGRACION DEL FFCC EN VALLADOLID
GRUPO : 9 : EJES ANCHO IB
EJE : 50 : VIA 1 IB - VIA 4 IB

* * * ESTADO DE RASANTES * * *

PENDIENTE	LONGITUD	PARAMETRO	VÉRTICE		ENTRADA AL ACUERDO		SALIDA DEL ACUERDO		BISECT.	DIF.PEN
(o/oo)	(m.)	(kv)	PK	Z	PK	Z	PK	Z	(m.)	(%)
					243513.731	695.721				
-5.591299	631.436	129999.648	244404.579	690.740	244088.861	692.505	244720.298	690.508	0.383	0.486
-0.734082	203.310	247395.068	245739.581	689.760	245637.926	689.835	245841.235	689.769	0.021	0.082
0.087719	159.918	227007.689	246537.580	689.830	246457.621	689.823	246617.539	689.893	0.014	0.070
0.792180	130.000	65995.953	247617.050	690.685	247552.050	690.634	247682.050	690.865	0.032	0.197
2.761998	70.000	64054.878	247825.184	691.260	247790.184	691.163	247860.184	691.395	0.010	0.109
3.854811	110.000	45090.775	248015.336	691.993	247960.336	691.781	248070.336	692.071	0.034	-0.244
1.415288	50.000	24986.196	248181.380	692.228	248156.380	692.193	248206.380	692.213	0.013	-0.200
-0.585817	50.000	113847.876	248290.062	692.164	248265.062	692.179	248315.062	692.139	0.003	-0.044
-1.025000	40.000	224168.114	248379.804	692.072	248359.804	692.093	248399.804	692.055	0.001	0.018
-0.846562	50.000	159083.205	248497.157	691.973	248472.157	691.994	248522.157	691.944	0.002	-0.031
-1.160863	70.612	44999.996	248652.214	691.793	248616.908	691.834	248687.520	691.807	0.014	0.157
0.408284	50.000	33518.436	248828.562	691.865	248803.562	691.855	248853.562	691.913	0.009	0.149
1.900000	50.000	124955.304	248929.415	692.057	248904.415	692.009	248954.415	692.094	0.003	-0.040
1.499857	30.000	35520.558	249117.686	692.339	249102.686	692.317	249132.686	692.349	0.003	-0.084
0.655276	30.000	55815.820	249198.568	692.392	249183.568	692.382	249213.568	692.394	0.002	-0.054
0.117794	30.000	14762.280	249263.602	692.400	249248.602	692.398	249278.602	692.432	0.008	0.203
2.150000	30.000	119288.667	249329.957	692.542	249314.957	692.510	249344.957	692.571	0.001	-0.025
1.898509							249384.950	692.647		

Istram 20.08.08.26 11/02/21 10:36:10 200009 pagina 1
PROYECTO : ESTUDIO INFORMATIVO DE LA INTEGRACION DEL FFCC EN VALLADOLID
GRUPO : 9 : EJES ANCHO IB
EJE : 63 : VIA 2 IB - VIA 7 IB

* * * ESTADO DE RASANTES * * *

PENDIENTE	LONGITUD	PARAMETRO	VÉRTICE		ENTRADA AL ACUERDO		SALIDA DEL ACUERDO		BISECT.	DIF.PEN
(o/oo)	(m.)	(kv)	PK	Z	PK	Z	PK	Z	(m.)	(%)
					0.000	690.611				
3.322688	20.024	8092.627	84.811	690.893	74.799	690.860	94.823	690.951	0.006	0.247
5.796979	19.123	6293.118	125.177	691.127	115.615	691.072	134.738	691.153	0.007	-0.304
2.758194	30.027	7899.831	202.039	691.339	187.025	691.298	217.052	691.323	0.014	-0.380
-1.042713	16.922	3400.096	279.721	691.258	271.259	691.267	288.182	691.291	0.011	0.498
3.934342	34.684	30002.511	341.739	691.502	324.397	691.434	359.081	691.550	0.005	-0.116
2.778305	41.822	139969.278	431.362	691.751	410.451	691.693	452.272	691.815	0.002	0.030
3.077097	81.163	22099.876	573.054	692.187	532.472	692.062	613.635	692.163	0.037	-0.367
-0.595436	20.066	15699.038	645.270	692.144	635.237	692.150	655.303	692.125	0.003	-0.128
-1.873611	22.022	8600.065	708.250	692.026	697.239	692.047	719.261	692.034	0.007	0.256
0.687085	30.101	14799.149	766.467	692.066	751.416	692.056	781.517	692.046	0.008	-0.203
-1.346876	25.000	29715.367	891.603	691.897	879.103	691.914	904.103	691.891	0.003	0.084
-0.505577	24.998	8830.210	1117.755	691.783	1105.256	691.789	1130.254	691.812	0.009	0.283
2.325439	24.978	19518.562	1227.887	692.039	1215.398	692.010	1240.376	692.052	0.004	-0.128
1.045736							1543.433	692.369		

PUNTOS SINGULARES EN ALZADO ANCHO 1.435 mm

Istram 20.08.08.26 11/02/21 09:39:22 200009 pagina 1
PROYECTO : ESTUDIO INFORMATIVO DE LA INTEGRACION DEL FFCC EN VALLADOLID
GRUPO : 1 : ALTERNATIVA 1
EJE : 1 : VIA 1 UIC

* * * ESTADO DE RASANTES * * *

PENDIENTE	LONGITUD	PARAMETRO	VÉRTICE		ENTRADA AL ACUERDO		SALIDA DEL ACUERDO		BISECT.	DIF.PEN
(o/oo)	(m.)	(kv)	PK	Z	PK	Z	PK	Z	(m.)	(%)
					174170.822	695.721				
-5.591295	631.438	130000.000	175061.671	690.740	174745.952	692.505	175377.390	690.508	0.383	0.486
-0.734082	203.314	247400.000	176396.671	689.760	176295.014	689.835	176498.328	689.769	0.021	0.082
0.087719	159.913	227000.000	177194.671	689.830	177114.715	689.823	177274.627	689.893	0.014	0.070
0.792181	133.000	339129.368	177998.602	690.467	177932.102	690.414	178065.102	690.493	0.007	-0.039
0.400000	133.000	42591.890	178274.708	690.577	178208.208	690.551	178341.208	690.812	0.052	0.312
3.522660	175.000	38675.809	178790.217	692.393	178702.717	692.085	178877.717	692.306	0.099	-0.452
-1.002132	75.000	215599.012	179112.255	692.071	179074.755	692.108	179149.755	692.020	0.003	-0.035
-1.350000	75.000	89157.367	179260.472	691.870	179222.972	691.921	179297.972	691.851	0.008	0.084
-0.508791	75.000	25615.061	179434.313	691.782	179396.813	691.801	179471.813	691.873	0.027	0.293
2.419174	100.000	48354.672	179630.661	692.257	179580.661	692.136	179680.661	692.275	0.026	-0.207
0.351122	70.000	101582.105	179810.086	692.320	179775.086	692.308	179845.086	692.356	0.006	0.069
1.040219	70.000	21264.480	179993.175	692.510	179958.175	692.474	180028.175	692.662	0.029	0.329
4.332094	100.000	261715.771	180451.603	694.496	180401.603	694.280	180501.603	694.694	0.005	-0.038
3.950000	90.000	103961.697	180647.030	695.268	180602.030	695.091	180692.030	695.485	0.010	0.087
4.815703	100.001	107510.162	180840.492	696.200	180790.492	695.959	180890.493	696.394	0.012	-0.093
3.885551	100.000	18338.798	181052.045	697.022	181002.045	696.828	181102.045	696.944	0.068	-0.545
-1.567369	119.999	47093.802	181267.693	696.684	181207.694	696.778	181327.693	696.743	0.038	0.255
0.980717	133.000	86723.440	181620.496	697.030	181553.996	696.965	181686.996	696.993	0.025	-0.153
-0.552893	133.000	354390.787	181910.808	696.869	181844.308	696.906	181977.308	696.858	0.006	0.038
-0.177602	133.000	218893.450	182752.516	696.720	182686.016	696.732	182819.016	696.749	0.010	0.061
0.430000	133.000	3358408.788	183105.060	696.872	183038.560	696.843	183171.560	696.898	0.001	-0.004
0.390398	180.001	461070.505	184330.492	697.350	184240.492	697.315	184420.493	697.350	0.009	-0.039
0.000000	180.002	133923.337	184760.492	697.350	184670.491	697.350	184850.494	697.471	0.030	0.134
1.344071	179.998	127500.076	185199.457	697.940	185109.458	697.819	185289.456	697.934	0.032	-0.141
-0.067678	180.022	2053220.095	185790.492	697.900	185700.481	697.906	185880.504	697.902	0.002	0.009
0.020000	179.578	62015649.676	187190.482	697.928	187100.694	697.926	187280.271	697.930	0.000	0.000
0.022896	229.112	10600.004	187714.595	697.940	187600.039	697.937	187829.152	700.419	0.619	2.161
21.637247	666.788	20434.997	188372.211	712.169	188038.817	704.955	188705.605	708.504	2.720	-3.263
-10.992460							188751.380	708.001		

Istram 20.08.08.26 11/02/21 09:39:53 200009 pagina 1
PROYECTO : ESTUDIO INFORMATIVO DE LA INTEGRACION DEL FFCC EN VALLADOLID
GRUPO : 1 : ALTERNATIVA 1
EJE : 2 : VIA 2 UIC

* * * ESTADO DE RASANTES * * *

PENDIENTE	LONGITUD	PARAMETRO	VÉRTICE		ENTRADA AL ACUERDO		SALIDA DEL ACUERDO		BISECT.	DIF.PEN
(o/oo)	(m.)	(kv)	PK	Z	PK	Z	PK	Z	(m.)	(%)
					174438.307	694.226				
-5.425838	231.998	60000.000	175017.941	691.081	174901.942	691.710	175133.940	690.900	0.112	0.387
-1.559208	84.338	97500.000	175421.351	690.452	175379.182	690.518	175463.520	690.423	0.009	0.087
-0.694199	136.821	140000.000	176415.302	689.762	176346.892	689.809	176483.712	689.781	0.017	0.098
0.283092	77.962	130000.000	177637.520	690.108	177598.539	690.097	177676.501	690.142	0.006	0.060
0.882802	47.133	80000.000	178214.093	690.617	178190.526	690.596	178237.660	690.652	0.003	0.059
1.471968	123.260	60000.000	178337.737	690.799	178276.107	690.708	178399.367	691.016	0.032	0.205
3.526299	237.176	64000.000	178752.336	692.261	178633.748	691.843	178870.924	692.240	0.110	-0.371
-0.179570	49.114	60000.000	178963.953	692.223	178939.396	692.227	178988.510	692.198	0.005	-0.082
-0.998133	33.842	43500.000	179072.155	692.115	179055.234	692.132	179089.076	692.085	0.003	-0.078
-1.776107	45.940	36300.000	179187.576	691.910	179164.606	691.951	179210.546	691.898	0.007	0.127
-0.510541	115.532	38700.000	179440.249	691.781	179382.483	691.810	179498.015	691.924	0.043	0.299
2.474771	30.200	14600.000	179616.831	692.218	179601.731	692.181	179631.931	692.224	0.008	-0.207
0.406269	30.354	97500.000	179698.058	692.251	179682.881	692.245	179713.235	692.262	0.001	0.031
0.717589	32.306	100000.000	179861.104	692.368	179844.951	692.356	179877.257	692.385	0.001	0.032
1.040652	149.921	42000.000	180027.346	692.541	179952.386	692.463	180102.306	692.887	0.067	0.357
4.610194							180120.000	692.968		

Istram 20.08.08.26 11/02/21 09:45:22 200009 pagina 1
PROYECTO : ESTUDIO INFORMATIVO DE LA INTEGRACION DEL FFCC EN VALLADOLID
GRUPO : 1 : ALTERNATIVA 1
EJE : 23 : VIA 2 UIC TRAMO CABECERA NORTE

* * * ESTADO DE RASANTES * * *

PENDIENTE	LONGITUD	PARAMETRO	VÉRTICE		ENTRADA AL ACUERDO		SALIDA DEL ACUERDO		BISECT.	DIF.PEN
(o/oo)	(m.)	(kv)	PK	Z	PK	Z	PK	Z	(m.)	(%)
					0.000	692.984				
4.352345	80.235	199417.404	346.205	694.491	306.088	694.317	386.322	694.650	0.004	-0.040
3.950000	110.615	124590.428	535.926	695.241	480.619	695.022	591.233	695.508	0.012	0.089
4.837827	97.132	101429.102	734.218	696.200	685.652	695.965	782.783	696.388	0.012	-0.096
3.880197							836.411	696.597		

Istram 20.08.08.26 11/02/21 09:45:48 200009 pagina 1
PROYECTO : ESTUDIO INFORMATIVO DE LA INTEGRACION DEL FFCC EN VALLADOLID
GRUPO : 1 : ALTERNATIVA 1
EJE : 42 : VIA 2 BIFURCACION NORTE

* * * ESTADO DE RASANTES * * *

PENDIENTE	LONGITUD	PARAMETRO	VÉRTICE		ENTRADA AL ACUERDO		SALIDA DEL ACUERDO		BISECT.	DIF.PEN
(o/oo)	(m.)	(kv)	PK	Z	PK	Z	PK	Z	(m.)	(%)
					-207.384	697.932				
0.022506	229.300	10600.000	148.084	697.940	33.434	697.937	262.734	700.423	0.620	2.163
21.654580	665.380	20359.905	805.266	712.171	472.576	704.967	1137.956	708.503	2.718	-3.268
-11.026301							1183.453	708.001		

Istram 20.08.08.26 11/02/21 09:40:40 200009 pagina 1
PROYECTO : ESTUDIO INFORMATIVO DE LA INTEGRACION DEL FFCC EN VALLADOLID
GRUPO : 1 : ALTERNATIVA 1
EJE : 32 : VIA 3 UIC

* * * ESTADO DE RASANTES * * *

PENDIENTE	LONGITUD	PARAMETRO	VÉRTICE		ENTRADA AL ACUERDO		SALIDA DEL ACUERDO		BISECT.	DIF.PEN
(o/oo)	(m.)	(kv)	PK	Z	PK	Z	PK	Z	(m.)	(%)
					178996.611	692.186				
-1.013381	23.695	30000.000	179054.831	692.127	179042.984	692.139	179066.679	692.124	0.002	0.079
-0.223555	26.071	13000.000	179162.187	692.103	179149.152	692.106	179175.223	692.074	0.007	-0.201
-2.228984	22.290	10000.000	179280.178	691.840	179269.034	691.865	179291.323	691.840	0.006	0.223
0.000000	63.300	40000.000	179384.294	691.840	179352.645	691.840	179415.944	691.890	0.013	0.158
1.582497	61.717	50000.000	179652.225	692.264	179621.367	692.215	179683.084	692.275	0.010	-0.123
0.348165							179778.602	692.308		

PUNTOS DEL EJE CADA 20 M ANCHO 1.668 MM

Istram 20.08.08.26 11/02/21 10:51:35 200009 pagina 1
PROYECTO : ESTUDIO INFORMATIVO DE LA INTEGRACION DEL FFCC EN VALLADOLID
GRUPO : 9 : EJES ANCHO IB
EJE : 14 : VIA 11 IB

* * * PUNTOS DEL EJE EN PLANTA * * *

TIPO	P.K.	X	Y	RADIO	Z RAS IZ.	Z RAS DR.	AZIMUT	DIST. EJE	PEN(o/oo)	PERAL_I	PERAL_D	HILO BAJO ZT (eje)	Z TERR.
RECTA Rampa	0.000	355911.312	4611338.054	0.000	692.212	692.212	79.909716	0.000	0.768	0.00	0.00	692.212	
CIRC. KV -6563	17.142	355927.607	4611343.374	200.000	692.210	692.210	79.909716	0.000	-1.393	0.00	0.00	692.210	
CIRC. KV -6563	20.000	355930.331	4611344.242	200.000	692.206	692.206	80.819521	0.000	-1.829	0.00	0.00	692.206	
CIRC. Pendiente	40.000	355949.695	4611349.213	200.000	692.161	692.161	87.185719	0.000	-2.280	0.00	0.00	692.161	
RECTA Pendiente	41.400	355951.067	4611349.488	0.000	692.157	692.157	87.631292	0.000	-2.280	0.00	0.00	692.157	
RECTA Pendiente	60.000	355969.317	4611353.079	0.000	692.115	692.115	87.631292	0.000	-2.280	0.00	0.00	692.115	
RECTA Pendiente	80.000	355988.941	4611356.940	0.000	692.069	692.069	87.631292	0.000	-2.280	0.00	0.00	692.069	
RECTA Pendiente	100.000	356008.565	4611360.802	0.000	692.024	692.024	87.631292	0.000	-2.280	0.00	0.00	692.024	
RECTA Pendiente	120.000	356028.188	4611364.663	0.000	691.978	691.978	87.631292	0.000	-2.280	0.00	0.00	691.978	
RECTA Pendiente	140.000	356047.812	4611368.524	0.000	691.933	691.933	87.631292	0.000	-2.280	0.00	0.00	691.933	
RECTA Pendiente	160.000	356067.436	4611372.386	0.000	691.887	691.887	87.631292	0.000	-2.280	0.00	0.00	691.887	
CIRC. Pendiente	165.183	356072.521	4611373.386	-215.000	691.875	691.875	87.631292	0.000	-2.280	0.00	0.00	691.875	
CIRC. Pendiente	180.000	356086.949	4611376.745	-215.000	691.841	691.841	83.243911	0.000	-2.280	0.00	0.00	691.841	
CIRC. Pendiente	200.000	356105.991	4611382.839	-215.000	691.796	691.796	77.321866	0.000	-2.280	0.00	0.00	691.796	
RECTA Pendiente	212.679	356117.737	4611387.608	0.000	691.767	691.767	73.567530	0.000	-2.280	0.00	0.00	691.767	
RECTA Pendiente	220.000	356124.436	4611390.562	0.000	691.750	691.750	73.567530	0.000	-2.280	0.00	0.00	691.750	
RECTA KV 7505	240.000	356142.736	4611398.629	0.000	691.725	691.725	73.567530	0.000	0.033	0.00	0.00	691.725	
RECTA Rampa	260.000	356161.037	4611406.696	0.000	691.742	691.742	73.567530	0.000	1.051	0.00	0.00	691.742	
RECTA Rampa	280.000	356179.338	4611414.764	0.000	691.763	691.763	73.567530	0.000	1.051	0.00	0.00	691.763	
RECTA Rampa	300.000	356197.639	4611422.831	0.000	691.784	691.784	73.567530	0.000	1.051	0.00	0.00	691.784	
RECTA Rampa	320.000	356215.939	4611430.899	0.000	691.805	691.805	73.567530	0.000	1.051	0.00	0.00	691.805	
RECTA Rampa	340.000	356234.240	4611438.966	0.000	691.826	691.826	73.567530	0.000	1.051	0.00	0.00	691.826	
RECTA Rampa	360.000	356252.541	4611447.034	0.000	691.847	691.847	73.567530	0.000	1.051	0.00	0.00	691.847	
RECTA Rampa	380.000	356270.841	4611455.101	0.000	691.868	691.868	73.567530	0.000	1.051	0.00	0.00	691.868	
RECTA Rampa	400.000	356289.142	4611463.169	0.000	691.889	691.889	73.567530	0.000	1.051	0.00	0.00	691.889	
RECTA Rampa	420.000	356307.443	4611471.236	0.000	691.910	691.910	73.567530	0.000	1.051	0.00	0.00	691.910	
RECTA Rampa	440.000	356325.744	4611479.304	0.000	691.931	691.931	73.567530	0.000	1.051	0.00	0.00	691.931	
RECTA Rampa	460.000	356344.044	4611487.371	0.000	691.952	691.952	73.567530	0.000	1.051	0.00	0.00	691.952	
RECTA Rampa	480.000	356362.345	4611495.439	0.000	691.973	691.973	73.567530	0.000	1.051	0.00	0.00	691.973	
RECTA Rampa	500.000	356380.646	4611503.506	0.000	691.994	691.994	73.567530	0.000	1.051	0.00	0.00	691.994	
CIRC. Rampa	515.801	356395.104	4611509.880	-175.000	692.011	692.011	73.567530	0.000	1.051	0.00	0.00	692.011	
CIRC. Rampa	520.000	356398.926	4611511.619	-175.000	692.015	692.015	72.039943	0.000	1.051	0.00	0.00	692.015	
CIRC. Rampa	540.000	356416.503	4611521.138	-175.000	692.036	692.036	64.764289	0.000	1.051	0.00	0.00	692.036	
RECTA Rampa	547.853	356423.088	4611525.415	0.000	692.044	692.044	61.907671	0.000	1.051	0.00	0.00	692.044	
RECTA Rampa	560.000	356433.125	4611532.257	0.000	692.057	692.057	61.907671	0.000	1.051	0.00	0.00	692.057	
RECTA Rampa	580.000	356449.650	4611543.523	0.000	692.078	692.078	61.907671	0.000	1.051	0.00	0.00	692.078	
RECTA Rampa	600.000	356466.176	4611554.788	0.000	692.099	692.099	61.907671	0.000	1.051	0.00	0.00	692.099	
RECTA Rampa	620.000	356482.701	4611566.054	0.000	692.120	692.120	61.907671	0.000	1.051	0.00	0.00	692.120	
RECTA Rampa	640.000	356499.226	4611577.320	0.000	692.141	692.141	61.907671	0.000	1.051	0.00	0.00	692.141	
RECTA Rampa	647.169	356505.150	4611581.358	0.000	692.149	692.149	61.907671	0.000	1.051	0.00	0.00	692.149	

Istram 20.08.08.26 11/02/21 10:50:00 200009 pagina 1
PROYECTO : ESTUDIO INFORMATIVO DE LA INTEGRACION DEL FFCC EN VALLADOLID
GRUPO : 9 : EJES ANCHO IB
EJE : 16 : VIA 6 IB

* * * PUNTOS DEL EJE EN PLANTA * * *

TIPO	P.K.	X	Y	RADIO	Z RAS IZ.	Z RAS DR.	AZIMUT	DIST. EJE	PEN(o/oo)	PERAL_I	PERAL_D	HILO BAJO ZT (eje)	Z TERR.
RECTA Pendiente	0.000	356069.289	4611391.931	0.000	691.953	691.953	74.549166	0.000	-1.818	0.00	0.00	691.953	
RECTA KV 19060	20.000	356087.712	4611399.715	0.000	691.917	691.917	74.549166	0.000	-1.630	0.00	0.00	691.917	
CIRC. KV 19060	26.550	356093.746	4611402.264	-1500.000	691.907	691.907	74.549166	0.000	-1.286	0.00	0.00	691.907	
CIRC. KV 19060	40.000	356106.112	4611407.555	-1500.000	691.895	691.895	73.978326	0.000	-0.580	0.00	0.00	691.895	
RECTA Pendiente	46.059	356111.667	4611409.974	0.000	691.891	691.891	73.721159	0.000	-0.507	0.00	0.00	691.891	
RECTA Pendiente	60.000	356124.437	4611415.567	0.000	691.884	691.884	73.721159	0.000	-0.507	0.00	0.00	691.884	
RECTA Pendiente	80.000	356142.757	4611423.590	0.000	691.874	691.874	73.721159	0.000	-0.507	0.00	0.00	691.874	
RECTA Pendiente	100.000	356161.077	4611431.613	0.000	691.864	691.864	73.721159	0.000	-0.507	0.00	0.00	691.864	
RECTA Pendiente	120.000	356179.397	4611439.637	0.000	691.854	691.854	73.721159	0.000	-0.507	0.00	0.00	691.854	
RECTA Pendiente	140.000	356197.717	4611447.660	0.000	691.844	691.844	73.721159	0.000	-0.507	0.00	0.00	691.844	
RECTA Pendiente	160.000	356216.037	4611455.683	0.000	691.834	691.834	73.721159	0.000	-0.507	0.00	0.00	691.834	
RECTA Pendiente	180.000	356234.357	4611463.706	0.000	691.824	691.824	73.721159	0.000	-0.507	0.00	0.00	691.824	
RECTA Pendiente	200.000	356252.677	4611471.730	0.000	691.813	691.813	73.721159	0.000	-0.507	0.00	0.00	691.813	
RECTA Pendiente	220.000	356270.998	4611479.753	0.000	691.803	691.803	73.721159	0.000	-0.507	0.00	0.00	691.803	
RECTA Pendiente	240.000	356289.318	4611487.776	0.000	691.793	691.793	73.721159	0.000	-0.507	0.00	0.00	691.793	
RECTA KV 8827	260.000	356307.638	4611495.799	0.000	691.792	691.792	73.721159	0.000	0.912	0.00	0.00	691.792	
RECTA Rampa	280.000	356325.958	4611503.823	0.000	691.830	691.830	73.721159	0.000	2.325	0.00	0.00	691.830	
RECTA Rampa	300.000	356344.278	4611511.846	0.000	691.876	691.876	73.721159	0.000	2.325	0.00	0.00	691.876	
RECTA Rampa	320.000	356362.598	4611519.869	0.000	691.923	691.923	73.721159	0.000	2.325	0.00	0.00	691.923	
RECTA Rampa	340.000	356380.918	4611527.893	0.000	691.969	691.969	73.721159	0.000	2.325	0.00	0.00	691.969	
RECTA KV -19617	360.000	356399.239	4611535.916	0.000	692.015	692.015	73.721159	0.000	2.157	0.00	0.00	692.015	
CIRC. KV -19617	372.566	356410.749	4611540.957	-800.000	692.038	692.038	73.721159	0.000	1.517	0.00	0.00	692.038	
CIRC. KV -19617	380.000	356417.545	4611543.971	-800.000	692.048	692.048	73.129606	0.000	1.138	0.00	0.00	692.048	
CIRC. Rampa	400.000	356435.685	4611552.391	-800.000	692.069	692.069	71.538056	0.000	1.051	0.00	0.00	692.069	
CIRC. Rampa	420.000	356453.609	4611561.262	-800.000	692.090	692.090	69.946507	0.000	1.051	0.00	0.00	692.090	
RECTA Rampa	436.561	356468.280	4611568.945	0.000	692.108	692.108	68.628622	0.000	1.051	0.00	0.00	692.108	
RECTA Rampa	440.000	356471.310	4611570.572	0.000	692.111	692.111	68.628622	0.000	1.051	0.00	0.00	692.111	
RECTA Rampa	460.000	356488.930	4611580.034	0.000	692.133	692.133	68.628622	0.000	1.051	0.00	0.00	692.133	
RECTA Rampa	480.000	356506.551	4611589.495	0.000	692.154	692.154	68.628622	0.000	1.051	0.00	0.00	692.154	
RECTA Rampa	500.000	356524.171	4611598.957	0.000	692.175	692.175	68.628622	0.000	1.051	0.00	0.00	692.175	
RECTA Rampa	520.000	356541.792	4611608.418	0.000	692.196	692.196	68.628622	0.000	1.051	0.00	0.00	692.196	
RECTA Rampa	540.000	356559.412	4611617.880	0.000	692.217	692.217	68.628622	0.000	1.051	0.00	0.00	692.217	
CIRC. Rampa	551.117	356569.207	4611623.139	350.000	692.228	692.228	68.628622	0.000	1.051	0.00	0.00	692.228	
CIRC. Rampa	560.000	356577.085	4611627.242	350.000	692.238	692.238	70.244275	0.000	1.051	0.00	0.00	692.238	
CIRC. Rampa	580.000	356595.187	4611635.738	350.000	692.259	692.259	73.882102	0.000	1.051	0.00	0.00	692.259	
RECTA Rampa	590.859	356605.211	4611639.914	0.000	692.270	692.270	75.857224	0.000	1.051	0.00	0.00	692.270	
RECTA Rampa	594.354	356608.458	4611641.208	0.000	692.274	692.274	75.857224	0.000	1.051	0.00	0.00	692.274	

Istram 20.08.08.26 11/02/21 10:50:20 200009 pagina 1
PROYECTO : ESTUDIO INFORMATIVO DE LA INTEGRACION DEL FFCC EN VALLADOLID
GRUPO : 9 : EJES ANCHO IB
EJE : 18 : VIA 8 IB

* * * PUNTOS DEL EJE EN PLANTA * * *

TIPO	P.K.	X	Y	RADIO	Z RAS IZ.	Z RAS DR.	AZIMUT	DIST. EJE	PEN(o/oo)	PERAL_I	PERAL_D	HILO BAJO	ZT (eje)	Z TERR.
RECTA Pendiente	0.000	356004.279	4611362.166	0.000	692.032	692.032	80.656516	0.000	-2.293	0.00	0.00	692.032		
RECTA Pendiente	20.000	356023.363	4611368.150	0.000	691.986	691.986	80.656516	0.000	-2.293	0.00	0.00	691.986		
CIRC. Pendiente	20.493	356023.833	4611368.297	-550.000	691.985	691.985	80.656516	0.000	-2.293	0.00	0.00	691.985		
CIRC. Pendiente	40.000	356042.340	4611374.463	-550.000	691.940	691.940	78.398586	0.000	-2.293	0.00	0.00	691.940		
RECTA Pendiente	41.852	356044.085	4611375.082	0.000	691.936	691.936	78.184220	0.000	-2.293	0.00	0.00	691.936		
RECTA Pendiente	60.000	356061.178	4611381.180	0.000	691.895	691.895	78.184220	0.000	-2.293	0.00	0.00	691.895		
RECTA Pendiente	80.000	356080.015	4611387.900	0.000	691.849	691.849	78.184220	0.000	-2.293	0.00	0.00	691.849		
CIRC. Pendiente	83.218	356083.046	4611388.982	-350.000	691.841	691.841	78.184220	0.000	-2.293	0.00	0.00	691.841		
CIRC. Pendiente	100.000	356098.711	4611394.997	-350.000	691.803	691.803	75.131723	0.000	-2.293	0.00	0.00	691.803		
RECTA Pendiente	107.538	356105.649	4611397.942	0.000	691.786	691.786	73.760670	0.000	-2.293	0.00	0.00	691.786		
RECTA Pendiente	120.000	356117.068	4611402.935	0.000	691.757	691.757	73.760670	0.000	-2.293	0.00	0.00	691.757		
RECTA KV 7476	140.000	356135.393	4611410.946	0.000	691.727	691.727	73.760670	0.000	-0.233	0.00	0.00	691.727		
RECTA Rampa	160.000	356153.718	4611418.958	0.000	691.742	691.742	73.760670	0.000	1.051	0.00	0.00	691.742		
RECTA Rampa	180.000	356172.043	4611426.970	0.000	691.763	691.763	73.760670	0.000	1.051	0.00	0.00	691.763		
RECTA Rampa	200.000	356190.368	4611434.982	0.000	691.784	691.784	73.760670	0.000	1.051	0.00	0.00	691.784		
RECTA Rampa	220.000	356208.693	4611442.994	0.000	691.805	691.805	73.760670	0.000	1.051	0.00	0.00	691.805		
RECTA Rampa	240.000	356227.019	4611451.006	0.000	691.826	691.826	73.760670	0.000	1.051	0.00	0.00	691.826		
RECTA Rampa	260.000	356245.344	4611459.018	0.000	691.847	691.847	73.760670	0.000	1.051	0.00	0.00	691.847		
RECTA Rampa	280.000	356263.669	4611467.030	0.000	691.868	691.868	73.760670	0.000	1.051	0.00	0.00	691.868		
RECTA Rampa	300.000	356281.994	4611475.042	0.000	691.889	691.889	73.760670	0.000	1.051	0.00	0.00	691.889		
RECTA Rampa	320.000	356300.319	4611483.054	0.000	691.910	691.910	73.760670	0.000	1.051	0.00	0.00	691.910		
RECTA Rampa	340.000	356318.644	4611491.066	0.000	691.931	691.931	73.760670	0.000	1.051	0.00	0.00	691.931		
RECTA Rampa	360.000	356336.969	4611499.077	0.000	691.952	691.952	73.760670	0.000	1.051	0.00	0.00	691.952		
RECTA Rampa	380.000	356355.294	4611507.089	0.000	691.973	691.973	73.760670	0.000	1.051	0.00	0.00	691.973		
RECTA Rampa	400.000	356373.619	4611515.101	0.000	691.994	691.994	73.760670	0.000	1.051	0.00	0.00	691.994		
RECTA Rampa	420.000	356391.944	4611523.113	0.000	692.015	692.015	73.760670	0.000	1.051	0.00	0.00	692.015		
RECTA Rampa	440.000	356410.270	4611531.125	0.000	692.036	692.036	73.760670	0.000	1.051	0.00	0.00	692.036		
CIRC. Rampa	455.509	356424.479	4611537.338	-240.000	692.052	692.052	73.760670	0.000	1.051	0.00	0.00	692.052		
CIRC. Rampa	460.000	356428.578	4611539.175	-240.000	692.057	692.057	72.569269	0.000	1.051	0.00	0.00	692.057		
CIRC. Rampa	480.000	356446.381	4611548.276	-240.000	692.078	692.078	67.264104	0.000	1.051	0.00	0.00	692.078		
CIRC. Rampa	500.000	356463.364	4611558.827	-240.000	692.099	692.099	61.958939	0.000	1.051	0.00	0.00	692.099		
RECTA Rampa	500.193	356463.524	4611558.935	0.000	692.099	692.099	61.907671	0.000	1.051	0.00	0.00	692.099		
RECTA Rampa	502.488	356465.420	4611560.228	0.000	692.102	692.102	61.907671	0.000	1.051	0.00	0.00	692.102		

Istram 20.08.08.26 11/02/21 10:50:44 200009 pagina 1
PROYECTO : ESTUDIO INFORMATIVO DE LA INTEGRACION DEL FFCC EN VALLADOLID
GRUPO : 9 : EJES ANCHO IB
EJE : 19 : VIA 9 IB

* * * PUNTOS DEL EJE EN PLANTA * * *

TIPO	P.K.	X	Y	RADIO	Z RAS IZ.	Z RAS DR.	AZIMUT	DIST. EJE	PEN(o/oo)	PERAL_I	PERAL_D	HILO BAJO	ZT (eje)	Z TERR.
RECTA Pendiente	0.000	356038.078	4611368.817	0.000	691.954	691.954	80.656516	0.000	-2.293	0.00	0.00	691.954		
CIRC. Pendiente	14.222	356051.648	4611373.072	-500.000	691.921	691.921	80.656516	0.000	-2.293	0.00	0.00	691.921		
CIRC. Pendiente	20.000	356057.152	4611374.832	-500.000	691.908	691.908	79.928821	0.000	-2.293	0.00	0.00	691.908		
CIRC. Pendiente	40.000	356076.036	4611381.415	-500.000	691.862	691.862	77.374342	0.000	-2.293	0.00	0.00	691.862		
CIRC. Pendiente	60.000	356094.642	4611388.747	-500.000	691.816	691.816	74.827863	0.000	-2.293	0.00	0.00	691.816		
RECTA Pendiente	67.384	356101.435	4611391.642	0.000	691.799	691.799	73.887600	0.000	-2.293	0.00	0.00	691.799		
RECTA Pendiente	80.000	356113.004	4611396.673	0.000	691.770	691.770	73.887600	0.000	-2.293	0.00	0.00	691.770		
RECTA KV 7460	100.000	356131.345	4611404.648	0.000	691.729	691.729	73.887600	0.000	-1.157	0.00	0.00	691.729		
RECTA Rampa	120.000	356149.687	4611412.623	0.000	691.732	691.732	73.887600	0.000	1.058	0.00	0.00	691.732		
RECTA Rampa	140.000	356168.028	4611420.599	0.000	691.753	691.753	73.887600	0.000	1.058	0.00	0.00	691.753		
RECTA Rampa	160.000	356186.369	4611428.574	0.000	691.774	691.774	73.887600	0.000	1.058	0.00	0.00	691.774		
RECTA Rampa	180.000	356204.710	4611436.549	0.000	691.795	691.795	73.887600	0.000	1.058	0.00	0.00	691.795		
RECTA Rampa	200.000	356223.051	4611444.525	0.000	691.817	691.817	73.887600	0.000	1.058	0.00	0.00	691.817		
RECTA Rampa	220.000	356241.392	4611452.500	0.000	691.838	691.838	73.887600	0.000	1.058	0.00	0.00	691.838		
RECTA Rampa	240.000	356259.733	4611460.475	0.000	691.859	691.859	73.887600	0.000	1.058	0.00	0.00	691.859		
RECTA Rampa	260.000	356278.074	4611468.450	0.000	691.880	691.880	73.887600	0.000	1.058	0.00	0.00	691.880		
RECTA Rampa	280.000	356296.415	4611476.426	0.000	691.901	691.901	73.887600	0.000	1.058	0.00	0.00	691.901		
RECTA Rampa	300.000	356314.756	4611484.401	0.000	691.922	691.922	73.887600	0.000	1.058	0.00	0.00	691.922		
RECTA Rampa	320.000	356333.097	4611492.376	0.000	691.944	691.944	73.887600	0.000	1.058	0.00	0.00	691.944		
RECTA Rampa	340.000	356351.438	4611500.352	0.000	691.965	691.965	73.887600	0.000	1.058	0.00	0.00	691.965		
RECTA Rampa	360.000	356369.779	4611508.327	0.000	691.986	691.986	73.887600	0.000	1.058	0.00	0.00	691.986		
RECTA Rampa	380.000	356388.120	4611516.302	0.000	692.007	692.007	73.887600	0.000	1.058	0.00	0.00	692.007		
RECTA Rampa	400.000	356406.461	4611524.278	0.000	692.028	692.028	73.887600	0.000	1.058	0.00	0.00	692.028		
CIRC. Rampa	410.883	356416.441	4611528.618	-250.000	692.040	692.040	73.887600	0.000	1.058	0.00	0.00	692.040		
CIRC. Rampa	420.000	356424.734	4611532.405	-250.000	692.049	692.049	71.566038	0.000	1.058	0.00	0.00	692.049		
RECTA Rampa	430.538	356434.140	4611537.156	0.000	692.061	692.061	68.882447	0.000	1.058	0.00	0.00	692.061		
RECTA Rampa	440.000	356442.494	4611541.598	0.000	692.071	692.071	68.882447	0.000	1.058	0.00	0.00	692.071		
RECTA Rampa	442.516	356444.715	4611542.780	0.000	692.073	692.073	68.882447	0.000	1.058	0.00	0.00	692.073		

Istram 20.08.08.26 11/02/21 10:51:08 200009 pagina 1
PROYECTO : ESTUDIO INFORMATIVO DE LA INTEGRACION DEL FFCC EN VALLADOLID
GRUPO : 9 : EJES ANCHO IB
EJE : 20 : VIA 10 IB

* * * PUNTOS DEL EJE EN PLANTA * * *

TIPO	P.K.	X	Y	RADIO	Z RAS IZ.	Z RAS DR.	AZIMUT	DIST. EJE	PEN(o/oo)	PERAL_I	PERAL_D	HILO BAJO ZT (eje)	Z TERR.
RECTA Pendiente	0.000	356071.881	4611375.468	0.000	691.875	691.875	80.656516	0.000	-2.306	0.00	0.00	691.875	
CIRC. Pendiente	1.602	356073.410	4611375.947	-190.000	691.871	691.871	80.656516	0.000	-2.306	0.00	0.00	691.871	
CIRC. Pendiente	20.000	356090.671	4611382.292	-190.000	691.829	691.829	74.492181	0.000	-2.306	0.00	0.00	691.829	
RECTA Pendiente	21.716	356092.248	4611382.969	0.000	691.825	691.825	73.917269	0.000	-2.306	0.00	0.00	691.825	
RECTA Pendiente	40.000	356109.019	4611390.252	0.000	691.783	691.783	73.917269	0.000	-2.306	0.00	0.00	691.783	
RECTA KV 7444	60.000	356127.363	4611398.219	0.000	691.737	691.737	73.917269	0.000	-1.862	0.00	0.00	691.737	
RECTA KV 7444	80.000	356145.708	4611406.186	0.000	691.727	691.727	73.917269	0.000	0.825	0.00	0.00	691.727	
RECTA Rampa	100.000	356164.053	4611414.153	0.000	691.748	691.748	73.917269	0.000	1.053	0.00	0.00	691.748	
RECTA Rampa	120.000	356182.398	4611422.119	0.000	691.769	691.769	73.917269	0.000	1.053	0.00	0.00	691.769	
RECTA Rampa	140.000	356200.742	4611430.086	0.000	691.790	691.790	73.917269	0.000	1.053	0.00	0.00	691.790	
RECTA Rampa	160.000	356219.087	4611438.053	0.000	691.811	691.811	73.917269	0.000	1.053	0.00	0.00	691.811	
RECTA Rampa	180.000	356237.432	4611446.020	0.000	691.832	691.832	73.917269	0.000	1.053	0.00	0.00	691.832	
RECTA Rampa	200.000	356255.777	4611453.987	0.000	691.853	691.853	73.917269	0.000	1.053	0.00	0.00	691.853	
RECTA Rampa	220.000	356274.121	4611461.953	0.000	691.874	691.874	73.917269	0.000	1.053	0.00	0.00	691.874	
RECTA Rampa	240.000	356292.466	4611469.920	0.000	691.895	691.895	73.917269	0.000	1.053	0.00	0.00	691.895	
RECTA Rampa	260.000	356310.811	4611477.887	0.000	691.916	691.916	73.917269	0.000	1.053	0.00	0.00	691.916	
RECTA Rampa	280.000	356329.156	4611485.854	0.000	691.937	691.937	73.917269	0.000	1.053	0.00	0.00	691.937	
RECTA Rampa	300.000	356347.500	4611493.821	0.000	691.958	691.958	73.917269	0.000	1.053	0.00	0.00	691.958	
RECTA Rampa	320.000	356365.845	4611501.787	0.000	691.979	691.979	73.917269	0.000	1.053	0.00	0.00	691.979	
CIRC. Rampa	327.004	356372.269	4611504.577	800.000	691.987	691.987	73.917269	0.000	1.053	0.00	0.00	691.987	
CIRC. Rampa	340.000	356384.231	4611509.657	800.000	692.000	692.000	74.951489	0.000	1.053	0.00	0.00	692.000	
CIRC. Rampa	349.700	356393.213	4611513.322	-350.000	692.010	692.010	75.723425	0.000	1.053	0.00	0.00	692.010	
CIRC. Rampa	360.000	356402.715	4611517.295	-350.000	692.021	692.021	73.850024	0.000	1.053	0.00	0.00	692.021	
RECTA Rampa	373.490	356414.976	4611522.919	0.000	692.036	692.036	71.396245	0.000	1.053	0.00	0.00	692.036	
RECTA Rampa	374.910	356416.255	4611523.535	0.000	692.037	692.037	71.396245	0.000	1.053	0.00	0.00	692.037	

Istram 20.08.08.26 11/02/21 10:47:21 200009 pagina 1
PROYECTO : ESTUDIO INFORMATIVO DE LA INTEGRACION DEL FFCC EN VALLADOLID
GRUPO : 9 : EJES ANCHO IB
EJE : 21 : VIA 4 IB

* * * PUNTOS DEL EJE EN PLANTA * * *

TIPO	P.K.	X	Y	RADIO	Z RAS IZ.	Z RAS DR.	AZIMUT	DIST. EJE	PEN(o/oo)	PERAL_I	PERAL_D	HILO BAJO ZT (eje)	Z TERR.
RECTA Pendiente	0.000	356280.091	4611494.380	0.000	691.795	691.795	71.982756	0.000	-0.042	0.00	0.00	691.795	
RECTA Pendiente	20.000	356298.185	4611502.900	0.000	691.794	691.794	71.982756	0.000	-0.042	0.00	0.00	691.794	
CIRC. KV 10245	26.173	356303.770	4611505.530	350.000	691.796	691.796	71.982756	0.000	0.543	0.00	0.00	691.796	
RECTA KV 10245	37.326	356313.934	4611510.120	0.000	691.808	691.808	74.011405	0.000	1.632	0.00	0.00	691.808	
RECTA KV 10245	40.000	356316.389	4611511.182	0.000	691.812	691.812	74.011405	0.000	1.893	0.00	0.00	691.812	
RECTA Rampa	60.000	356334.745	4611519.121	0.000	691.859	691.859	74.011405	0.000	2.399	0.00	0.00	691.859	
RECTA Rampa	80.000	356353.102	4611527.061	0.000	691.907	691.907	74.011405	0.000	2.399	0.00	0.00	691.907	
RECTA Rampa	100.000	356371.458	4611535.001	0.000	691.955	691.955	74.011405	0.000	2.399	0.00	0.00	691.955	
RECTA Rampa	120.000	356389.815	4611542.940	0.000	692.003	692.003	74.011405	0.000	2.399	0.00	0.00	692.003	
RECTA KV -18342	140.000	356408.171	4611550.880	0.000	692.044	692.044	74.011405	0.000	1.525	0.00	0.00	692.044	
RECTA Rampa	160.000	356426.528	4611558.820	0.000	692.067	692.067	74.011405	0.000	1.036	0.00	0.00	692.067	
RECTA Rampa	180.000	356444.884	4611566.759	0.000	692.088	692.088	74.011405	0.000	1.036	0.00	0.00	692.088	
CIRC. Rampa	180.275	356445.136	4611566.869	500.000	692.088	692.088	74.011405	0.000	1.036	0.00	0.00	692.088	
RECTA Rampa	192.802	356456.696	4611571.697	0.000	692.101	692.101	75.606449	0.000	1.036	0.00	0.00	692.101	
RECTA Rampa	197.526	356461.077	4611573.463	0.000	692.106	692.106	75.606449	0.000	1.036	0.00	0.00	692.106	

Istram 20.08.08.26 11/02/21 10:53:10 200009 pagina 1
PROYECTO : ESTUDIO INFORMATIVO DE LA INTEGRACION DEL FFCC EN VALLADOLID
GRUPO : 9 : EJES ANCHO IB
EJE : 37 : VIA 8 IB (TRES HERMANOS)

* * * PUNTOS DEL EJE EN PLANTA * * *

TIPO	P.K.	X	Y	RADIO	Z RAS IZ.	Z RAS DR.	AZIMUT	DIST. EJE	PEN(o/oo)	PERAL_I	PERAL_D	HILO BAJO ZT (eje)	Z TERR.
RECTA Rampa	0.000	358842.691	4614795.675	0.000	697.117	697.117	37.302886	0.000	0.391	0.00	0.00	697.117	
RECTA Pendiente	20.000	358853.751	4614812.338	0.000	697.089	697.089	37.302886	0.000	-2.800	0.00	0.00	697.089	
RECTA KV 4688	40.000	358864.810	4614829.002	0.000	697.035	697.035	37.302886	0.000	-1.694	0.00	0.00	697.035	
RECTA Rampa	60.000	358875.870	4614845.666	0.000	697.033	697.033	37.302886	0.000	0.399	0.00	0.00	697.033	
RECTA Rampa	80.000	358886.930	4614862.329	0.000	697.041	697.041	37.302886	0.000	0.399	0.00	0.00	697.041	
RECTA Rampa	100.000	358897.990	4614878.993	0.000	697.049	697.049	37.302886	0.000	0.399	0.00	0.00	697.049	
RECTA Rampa	120.000	358909.050	4614895.657	0.000	697.057	697.057	37.302886	0.000	0.399	0.00	0.00	697.057	
RECTA Rampa	140.000	358920.110	4614912.321	0.000	697.065	697.065	37.302886	0.000	0.399	0.00	0.00	697.065	
RECTA Rampa	160.000	358931.170	4614928.984	0.000	697.073	697.073	37.302886	0.000	0.399	0.00	0.00	697.073	
RECTA Rampa	180.000	358942.229	4614945.648	0.000	697.081	697.081	37.302886	0.000	0.399	0.00	0.00	697.081	
CLOT. Rampa	194.959	358950.502	4614958.112	-1000000.000	697.087	697.087	37.302886	0.000	0.399	0.00	0.00	697.087	
CLOT. Rampa	200.000	358953.285	4614962.315	-793.482	697.089	697.089	37.100660	0.000	0.399	0.00	0.00	697.089	
CIRC. Rampa	204.959	358955.997	4614966.466	-400.000	697.091	697.091	36.507111	0.000	0.399	0.00	0.00	697.091	
CIRC. Rampa	220.000	358963.918	4614979.252	-400.000	697.097	697.097	34.113250	0.000	0.399	0.00	0.00	697.097	
CLOT. Rampa	225.862	358966.874	4614984.314	-400.000	697.099	697.099	33.180243	0.000	0.399	0.00	0.00	697.099	
CLOT. Rampa	240.000	358973.747	4614996.668	-1364.662	697.105	697.105	31.725432	0.000	0.399	0.00	0.00	697.105	
RECTA Rampa	245.862	358976.541	4615001.822	0.000	697.107	697.107	31.588694	0.000	0.399	0.00	0.00	697.107	
RECTA Rampa	260.000	358983.272	4615014.254	0.000	697.113	697.113	31.588694	0.000	0.399	0.00	0.00	697.113	
RECTA Rampa	280.000	358992.794	4615031.842	0.000	697.121	697.121	31.588694	0.000	0.399	0.00	0.00	697.121	
RECTA Rampa	300.000	359002.315	4615049.430	0.000	697.129	697.129	31.588694	0.000	0.399	0.00	0.00	697.129	
RECTA Rampa	320.000	359011.837	4615067.018	0.000	697.137	697.137	31.588694	0.000	0.399	0.00	0.00	697.137	
RECTA Rampa	340.000	359021.359	4615084.606	0.000	697.145	697.145	31.588694	0.000	0.399	0.00	0.00	697.145	
RECTA Rampa	360.000	359030.880	4615102.194	0.000	697.153	697.153	31.588694	0.000	0.399	0.00	0.00	697.153	
RECTA Rampa	380.000	359040.402	4615119.782	0.000	697.161	697.161	31.588694	0.000	0.399	0.00	0.00	697.161	
RECTA Rampa	400.000	359049.923	4615137.370	0.000	697.169	697.169	31.588694	0.000	0.399	0.00	0.00	697.169	
RECTA Rampa	420.000	359059.445	4615154.958	0.000	697.177	697.177	31.588694	0.000	0.399	0.00	0.00	697.177	
RECTA Rampa	440.000	359068.967	4615172.547	0.000	697.185	697.185	31.588694	0.000	0.399	0.00	0.00	697.185	
RECTA Rampa	460.000	359078.488	4615190.135	0.000	697.193	697.193	31.588694	0.000	0.399	0.00	0.00	697.193	
RECTA Rampa	480.000	359088.010	4615207.723	0.000	697.201	697.201	31.588694	0.000	0.399	0.00	0.00	697.201	
RECTA Rampa	500.000	359097.532	4615225.311	0.000	697.209	697.209	31.588694	0.000	0.399	0.00	0.00	697.209	
RECTA Rampa	520.000	359107.053	4615242.899	0.000	697.217	697.217	31.588694	0.000	0.399	0.00	0.00	697.217	
RECTA KV -374996	540.000	359116.575	4615260.487	0.000	697.225	697.225	31.588694	0.000	0.367	0.00	0.00	697.225	
RECTA KV -374996	560.000	359126.097	4615278.075	0.000	697.232	697.232	31.588694	0.000	0.314	0.00	0.00	697.232	
RECTA KV -374996	580.000	359135.618	4615295.663	0.000	697.237	697.237	31.588694	0.000	0.261	0.00	0.00	697.237	
RECTA KV -374996	600.000	359145.140	4615313.251	0.000	697.242	697.242	31.588694	0.000	0.207	0.00	0.00	697.242	
RECTA KV -374996	620.000	359154.662	4615330.839	0.000	697.246	697.246	31.588694	0.000	0.154	0.00	0.00	697.246	
RECTA KV -374996	640.000	359164.183	4615348.427	0.000	697.248	697.248	31.588694	0.000	0.101	0.00	0.00	697.248	
CLOT. KV -374996	652.426	359170.099	4615359.354	-1000000.000	697.249	697.249	31.588694	0.000	0.067	0.00	0.00	697.249	
CLOT. KV -374996	660.000	359173.697	4615366.019	-1056.237	697.250	697.250	31.360440	0.000	0.047	0.00	0.00	697.250	
CIRC. KV -374996	672.426	359179.473	4615377.020	-400.000	697.250	697.250	29.997144	0.000	0.014	0.00	0.00	697.250	
CIRC. Horizontal	680.000	359182.848	4615383.801	-400.000	697.250	697.250	28.791695	0.000	0.000	0.00	0.00	697.250	
CLOT. Horizontal	688.329	359186.409	4615391.330	-400.000	697.250	697.250	27.466069	0.000	0.000	0.00	0.00	697.250	
CLOT. Horizontal	700.000	359191.165	4615401.988	-960.482	697.250	697.250	26.150554	0.000	0.000	0.00	0.00	697.250	
RECTA Horizontal	708.329	359194.468	4615409.634	0.000	697.250	697.250	25.874520	0.000	0.000	0.00	0.00	697.250	
RECTA Horizontal	720.000	359199.082	4615420.354	0.000	697.250	697.250	25.874520	0.000	0.000	0.00	0.00	697.250	
RECTA Horizontal	740.000	359206.989	4615438.725	0.000	697.250	697.250	25.874520	0.000	0.000	0.00	0.00	697.250	
RECTA Horizontal	760.000	359214.896	4615457.095	0.000	697.250	697.250	25.874520	0.000	0.000	0.00	0.00	697.250	
RECTA Horizontal	780.000	359222.803	4615475.466	0.000	697.250	697.250	25.874520	0.000	0.000	0.00	0.00	697.250	
RECTA Horizontal	800.000	359230.709	4615493.837	0.000	697.250	697.250	25.874520	0.000	0.000	0.00	0.00	697.250	
RECTA Horizontal	820.000	359238.616	4615512.208	0.000	697.250	697.250	25.874520	0.000	0.000	0.00	0.00	697.250	

Istram 20.08.08.26 11/02/21 10:53:10 200009 pagina 2
PROYECTO : ESTUDIO INFORMATIVO DE LA INTEGRACION DEL FFCC EN VALLADOLID
GRUPO : 9 : EJES ANCHO IB
EJE : 37 : VIA 8 IB (TRES HERMANOS)

* * * PUNTOS DEL EJE EN PLANTA * * *

TIPO	P.K.	X	Y	RADIO	Z RAS IZ.	Z RAS DR.	AZIMUT	DIST. EJE	PEN(o/oo)	PERAL_I	PERAL_D	HILO BAJO ZT (eje)	Z TERR.
RECTA Horizontal	840.000	359246.523	4615530.578	0.000	697.250	697.250	25.874520	0.000	0.000	0.00	0.00	697.250	
RECTA KV 5357	860.000	359254.430	4615548.949	0.000	697.262	697.262	25.874520	0.000	2.111	0.00	0.00	697.262	
RECTA Rampa	880.000	359262.337	4615567.320	0.000	697.317	697.317	25.874520	0.000	2.800	0.00	0.00	697.317	
RECTA Horizontal	900.000	359270.243	4615585.690	0.000	697.350	697.350	25.874520	0.000	0.000	0.00	0.00	697.350	
RECTA Horizontal	901.035	359270.652	4615586.641	0.000	697.350	697.350	25.874520	0.000	0.000	0.00	0.00	697.350	

Istram 20.08.08.26 11/02/21 10:51:58 200009 pagina 1
PROYECTO : ESTUDIO INFORMATIVO DE LA INTEGRACION DEL FFCC EN VALLADOLID
GRUPO : 9 : EJES ANCHO IB
EJE : 38 : VIA MANGO 1 IB (TRES HERMANOS)

* * * PUNTOS DEL EJE EN PLANTA * * *

TIPO	P.K.	X	Y	RADIO	Z RAS IZ.	Z RAS DR.	AZIMUT	DIST. EJE	PEN(o/oo)	PERAL_I	PERAL_D	HILO BAJO ZT (eje)	Z TERR.
RECTA Pendiente	0.000	358872.513	4614836.760	0.000	697.029	697.029	231.588703	0.000	-0.400	0.00	0.00	697.029	
RECTA Pendiente	20.000	358862.991	4614819.172	0.000	697.021	697.021	231.588703	0.000	-0.400	0.00	0.00	697.021	
RECTA Pendiente	40.000	358853.470	4614801.584	0.000	697.013	697.013	231.588703	0.000	-0.400	0.00	0.00	697.013	
RECTA Pendiente	60.000	358843.948	4614783.996	0.000	697.005	697.005	231.588703	0.000	-0.400	0.00	0.00	697.005	
RECTA Pendiente	80.000	358834.426	4614766.408	0.000	696.997	696.997	231.588703	0.000	-0.400	0.00	0.00	696.997	
RECTA Pendiente	99.998	358824.906	4614748.822	0.000	696.989	696.989	231.588703	0.000	-0.400	0.00	0.00	696.989	

Istram 20.08.08.26 11/02/21 10:53:32 200009 pagina 1
PROYECTO : ESTUDIO INFORMATIVO DE LA INTEGRACION DEL FFCC EN VALLADOLID
GRUPO : 9 : EJES ANCHO IB
EJE : 39 : VIA MANGO 2 (TRES HERMANOS)

* * * PUNTOS DEL EJE EN PLANTA * * *

TIPO	P.K.	X	Y	RADIO	Z RAS IZ.	Z RAS DR.	AZIMUT	DIST. EJE	PEN(o/oo)	PERAL_I	PERAL_D	HILO BAJO	ZT (eje)	Z TERR.
RECTA Rampa	0.000	359250.423	4615534.258	0.000	697.250	697.250	31.588703	0.000	0.000	0.00	0.00	697.250		
RECTA Rampa	20.000	359259.945	4615551.846	0.000	697.251	697.251	31.588703	0.000	0.000	0.00	0.00	697.251		
RECTA Rampa	40.000	359269.466	4615569.434	0.000	697.252	697.252	31.588703	0.000	0.000	0.00	0.00	697.252		
RECTA Rampa	60.000	359278.988	4615587.022	0.000	697.254	697.254	31.588703	0.000	0.000	0.00	0.00	697.254		
RECTA Rampa	80.000	359288.510	4615604.611	0.000	697.255	697.255	31.588703	0.000	0.000	0.00	0.00	697.255		
RECTA Rampa	100.000	359298.031	4615622.199	0.000	697.256	697.256	31.588703	0.000	0.000	0.00	0.00	697.256		

Istram 20.08.08.26 11/02/21 10:52:20 200009 pagina 1
PROYECTO : ESTUDIO INFORMATIVO DE LA INTEGRACION DEL FFCC EN VALLADOLID
GRUPO : 9 : EJES ANCHO IB
EJE : 40 : VIA 4 IB (TRES HERMANOS)

* * * PUNTOS DEL EJE EN PLANTA * * *

TIPO	P.K.	X	Y	RADIO	Z RAS IZ.	Z RAS DR.	AZIMUT	DIST. EJE	PEN(o/oo)	PERAL_I	PERAL_D	HILO BAJO	ZT (eje)	Z TERR.
RECTA Rampa	0.000	358921.237	4614917.849	0.000	697.067	697.067	30.328110	0.000	0.400	0.00	0.00	697.067		
RECTA Rampa	20.000	358930.409	4614935.622	0.000	697.075	697.075	30.328110	0.000	0.400	0.00	0.00	697.075		
CIRC. Rampa	23.302	358931.923	4614938.557	4500.000	697.077	697.077	30.328110	0.000	0.400	0.00	0.00	697.077		
CIRC. Rampa	40.000	358939.608	4614953.381	4500.000	697.083	697.083	30.564332	0.000	0.400	0.00	0.00	697.083		
CIRC. Rampa	60.000	358948.884	4614971.099	4500.000	697.091	697.091	30.847274	0.000	0.400	0.00	0.00	697.091		
CIRC. Rampa	80.000	358958.240	4614988.776	4500.000	697.099	697.099	31.130216	0.000	0.400	0.00	0.00	697.099		
CIRC. Rampa	100.000	358967.674	4615006.411	4500.000	697.107	697.107	31.413158	0.000	0.400	0.00	0.00	697.107		
RECTA Rampa	112.409	358973.566	4615017.332	0.000	697.112	697.112	31.588703	0.000	0.400	0.00	0.00	697.112		
RECTA Rampa	120.000	358977.180	4615024.007	0.000	697.115	697.115	31.588703	0.000	0.400	0.00	0.00	697.115		
RECTA Rampa	140.000	358986.702	4615041.595	0.000	697.123	697.123	31.588703	0.000	0.400	0.00	0.00	697.123		
RECTA Rampa	160.000	358996.224	4615059.184	0.000	697.131	697.131	31.588703	0.000	0.400	0.00	0.00	697.131		
RECTA Rampa	180.000	359005.745	4615076.772	0.000	697.139	697.139	31.588703	0.000	0.400	0.00	0.00	697.139		
RECTA Rampa	200.000	359015.267	4615094.360	0.000	697.147	697.147	31.588703	0.000	0.400	0.00	0.00	697.147		
RECTA Rampa	220.000	359024.789	4615111.948	0.000	697.155	697.155	31.588703	0.000	0.400	0.00	0.00	697.155		
RECTA Rampa	240.000	359034.310	4615129.536	0.000	697.163	697.163	31.588703	0.000	0.400	0.00	0.00	697.163		
RECTA Rampa	260.000	359043.832	4615147.124	0.000	697.171	697.171	31.588703	0.000	0.400	0.00	0.00	697.171		
RECTA Rampa	280.000	359053.354	4615164.712	0.000	697.179	697.179	31.588703	0.000	0.400	0.00	0.00	697.179		
RECTA Rampa	300.000	359062.875	4615182.300	0.000	697.187	697.187	31.588703	0.000	0.400	0.00	0.00	697.187		
RECTA Rampa	320.000	359072.397	4615199.888	0.000	697.195	697.195	31.588703	0.000	0.400	0.00	0.00	697.195		
RECTA Rampa	340.000	359081.919	4615217.476	0.000	697.203	697.203	31.588703	0.000	0.400	0.00	0.00	697.203		
RECTA Rampa	360.000	359091.440	4615235.064	0.000	697.211	697.211	31.588703	0.000	0.400	0.00	0.00	697.211		
RECTA Rampa	380.000	359100.962	4615252.652	0.000	697.219	697.219	31.588703	0.000	0.400	0.00	0.00	697.219		
RECTA KV -376105	400.000	359110.483	4615270.240	0.000	697.227	697.227	31.588703	0.000	0.352	0.00	0.00	697.227		
RECTA KV -376105	420.000	359120.005	4615287.828	0.000	697.233	697.233	31.588703	0.000	0.299	0.00	0.00	697.233		
RECTA KV -376105	440.000	359129.527	4615305.416	0.000	697.239	697.239	31.588703	0.000	0.246	0.00	0.00	697.239		
RECTA KV -376105	460.000	359139.048	4615323.004	0.000	697.243	697.243	31.588703	0.000	0.192	0.00	0.00	697.243		
RECTA KV -376105	480.000	359148.570	4615340.592	0.000	697.246	697.246	31.588703	0.000	0.139	0.00	0.00	697.246		
RECTA KV -376105	500.000	359158.092	4615358.180	0.000	697.249	697.249	31.588703	0.000	0.086	0.00	0.00	697.249		
RECTA KV -376105	520.000	359167.613	4615375.768	0.000	697.250	697.250	31.588703	0.000	0.033	0.00	0.00	697.250		
RECTA Horizontal	540.000	359177.135	4615393.356	0.000	697.250	697.250	31.588703	0.000	0.000	0.00	0.00	697.250		
RECTA Horizontal	560.000	359186.657	4615410.944	0.000	697.250	697.250	31.588703	0.000	0.000	0.00	0.00	697.250		
RECTA Horizontal	580.000	359196.178	4615428.532	0.000	697.250	697.250	31.588703	0.000	0.000	0.00	0.00	697.250		
RECTA Horizontal	600.000	359205.700	4615446.120	0.000	697.250	697.250	31.588703	0.000	0.000	0.00	0.00	697.250		
RECTA Horizontal	620.000	359215.222	4615463.708	0.000	697.250	697.250	31.588703	0.000	0.000	0.00	0.00	697.250		
RECTA Horizontal	622.094	359216.218	4615465.549	0.000	697.250	697.250	31.588703	0.000	0.000	0.00	0.00	697.250		

Istram 20.08.08.26 11/02/21 10:52:43 200009 pagina 1
PROYECTO : ESTUDIO INFORMATIVO DE LA INTEGRACION DEL FFCC EN VALLADOLID
GRUPO : 9 : EJES ANCHO IB
EJE : 41 : VIA 6 IB (TRES HERMANOS)

* * * PUNTOS DEL EJE EN PLANTA * * *

TIPO	P.K.	X	Y	RADIO	Z RAS IZ.	Z RAS DR.	AZIMUT	DIST. EJE	PEN(o/oo)	PERAL_I	PERAL_D	HILO BAJO	ZT (eje)	Z TERR.
RECTA Rampa	0.000	358948.126	4614958.362	0.000	697.087	697.087	30.328110	0.000	0.400	0.00	0.00	697.087		
CIRC. Rampa	0.013	358948.132	4614958.374	3580.000	697.087	697.087	30.328110	0.000	0.400	0.00	0.00	697.087		
CIRC. Rampa	20.000	358957.347	4614976.110	3580.000	697.095	697.095	30.683526	0.000	0.400	0.00	0.00	697.095		
CIRC. Rampa	40.000	358966.667	4614993.805	3580.000	697.103	697.103	31.039180	0.000	0.400	0.00	0.00	697.103		
CIRC. Rampa	60.000	358976.086	4615011.448	3580.000	697.111	697.111	31.394833	0.000	0.400	0.00	0.00	697.111		
RECTA Rampa	70.902	358981.262	4615021.044	0.000	697.115	697.115	31.588703	0.000	0.400	0.00	0.00	697.115		
RECTA Rampa	80.000	358985.593	4615029.044	0.000	697.119	697.119	31.588703	0.000	0.400	0.00	0.00	697.119		
RECTA Rampa	100.000	358995.115	4615046.632	0.000	697.127	697.127	31.588703	0.000	0.400	0.00	0.00	697.127		
RECTA Rampa	120.000	359004.636	4615064.220	0.000	697.135	697.135	31.588703	0.000	0.400	0.00	0.00	697.135		
RECTA Rampa	140.000	359014.158	4615081.808	0.000	697.143	697.143	31.588703	0.000	0.400	0.00	0.00	697.143		
RECTA Rampa	160.000	359023.680	4615099.396	0.000	697.151	697.151	31.588703	0.000	0.400	0.00	0.00	697.151		
RECTA Rampa	180.000	359033.201	4615116.984	0.000	697.159	697.159	31.588703	0.000	0.400	0.00	0.00	697.159		
RECTA Rampa	200.000	359042.723	4615134.572	0.000	697.167	697.167	31.588703	0.000	0.400	0.00	0.00	697.167		
RECTA Rampa	220.000	359052.245	4615152.160	0.000	697.175	697.175	31.588703	0.000	0.400	0.00	0.00	697.175		
RECTA Rampa	240.000	359061.766	4615169.748	0.000	697.183	697.183	31.588703	0.000	0.400	0.00	0.00	697.183		
RECTA Rampa	260.000	359071.288	4615187.336	0.000	697.191	697.191	31.588703	0.000	0.400	0.00	0.00	697.191		
RECTA Rampa	280.000	359080.809	4615204.925	0.000	697.199	697.199	31.588703	0.000	0.400	0.00	0.00	697.199		
RECTA Rampa	300.000	359090.331	4615222.513	0.000	697.207	697.207	31.588703	0.000	0.400	0.00	0.00	697.207		
RECTA Rampa	320.000	359099.853	4615240.101	0.000	697.215	697.215	31.588703	0.000	0.400	0.00	0.00	697.215		
RECTA KV -373460	340.000	359109.374	4615257.689	0.000	697.222	697.222	31.588703	0.000	0.384	0.00	0.00	697.222		
RECTA KV -373460	360.000	359118.896	4615275.277	0.000	697.230	697.230	31.588703	0.000	0.330	0.00	0.00	697.230		
RECTA KV -373460	380.000	359128.418	4615292.865	0.000	697.236	697.236	31.588703	0.000	0.277	0.00	0.00	697.236		
RECTA KV -373460	400.000	359137.939	4615310.453	0.000	697.241	697.241	31.588703	0.000	0.223	0.00	0.00	697.241		
RECTA KV -373460	420.000	359147.461	4615328.041	0.000	697.245	697.245	31.588703	0.000	0.170	0.00	0.00	697.245		
RECTA KV -373460	440.000	359156.983	4615345.629	0.000	697.247	697.247	31.588703	0.000	0.116	0.00	0.00	697.247		
RECTA KV -373460	460.000	359166.504	4615363.217	0.000	697.249	697.249	31.588703	0.000	0.063	0.00	0.00	697.249		
RECTA KV -373460	480.000	359176.026	4615380.805	0.000	697.250	697.250	31.588703	0.000	0.009	0.00	0.00	697.250		
RECTA Horizontal	500.000	359185.548	4615398.393	0.000	697.250	697.250	31.588703	0.000	0.000	0.00	0.00	697.250		
RECTA Horizontal	518.103	359194.166	4615414.312	0.000	697.250	697.250	31.588703	0.000	0.000	0.00	0.00	697.250		

Istram 20.08.08.26 11/02/21 10:49:36 200009 pagina 1
PROYECTO : ESTUDIO INFORMATIVO DE LA INTEGRACION DEL FFCC EN VALLADOLID
GRUPO : 9 : EJES ANCHO IB
EJE : 49 : VIA 5 IB - VIA 1 IB

* * * PUNTOS DEL EJE EN PLANTA * * *

TIPO	P.K.	X	Y	RADIO	Z RAS IZ.	Z RAS DR.	AZIMUT	DIST. EJE	PEN(o/oo)	PERAL_I	PERAL_D	HILO BAJO	ZT (eje)	Z TERR.
RECTA Pendiente	0.000	356030.189	4611379.454	0.000	691.998	691.998	73.288573	0.000	-1.354	0.00	0.00	691.998	691.904	691.904
CIRC. Pendiente	4.876	356034.642	4611381.441	1100.000	691.992	691.992	73.288573	0.000	-1.354	0.00	0.00	691.992	691.943	691.943
CIRC. KV 177240	20.000	356048.496	4611387.506	1100.000	691.972	691.972	74.163839	0.000	-1.300	0.00	0.00	691.972	692.082	692.082
CIRC. KV 177240	38.681	356065.721	4611394.735	-1600.000	691.948	691.948	75.245012	0.000	-1.194	0.00	0.00	691.948	692.125	692.125
CIRC. KV 177240	40.000	356066.941	4611395.236	-1600.000	691.947	691.947	75.192543	0.000	-1.187	0.00	0.00	691.947	692.009	692.009
CIRC. Pendiente	60.000	356085.394	4611402.949	-1600.000	691.924	691.924	74.396769	0.000	-1.129	0.00	0.00	691.924	691.923	691.923
RECTA Pendiente	76.701	356100.728	4611409.566	0.000	691.905	691.905	73.732252	0.000	-1.129	0.00	0.00	691.905	692.142	692.142
RECTA Pendiente	80.000	356103.750	4611410.889	0.000	691.901	691.901	73.732252	0.000	-1.129	0.00	0.00	691.901	691.836	691.836
RECTA Pendiente	100.000	356122.072	4611418.909	0.000	691.879	691.879	73.732252	0.000	-1.129	0.00	0.00	691.879	691.921	691.921
RECTA Pendiente	120.000	356140.393	4611426.929	0.000	691.856	691.856	73.732252	0.000	-1.129	0.00	0.00	691.856	692.164	692.164
RECTA Pendiente	140.000	356158.715	4611434.949	0.000	691.834	691.834	73.732252	0.000	-1.129	0.00	0.00	691.834	691.750	691.750
RECTA Pendiente	160.000	356177.036	4611442.969	0.000	691.811	691.811	73.732252	0.000	-1.129	0.00	0.00	691.811	692.120	692.120
RECTA Pendiente	180.000	356195.358	4611450.990	0.000	691.788	691.788	73.732252	0.000	-1.129	0.00	0.00	691.788	692.261	692.261
RECTA Pendiente	200.000	356213.679	4611459.010	0.000	691.766	691.766	73.732252	0.000	-1.129	0.00	0.00	691.766	691.742	691.742
RECTA Pendiente	220.000	356232.001	4611467.030	0.000	691.743	691.743	73.732252	0.000	-1.129	0.00	0.00	691.743	692.158	692.158
RECTA Pendiente	240.000	356250.322	4611475.050	0.000	691.721	691.721	73.732252	0.000	-1.129	0.00	0.00	691.721	692.321	692.321
RECTA KV 14165	260.000	356268.644	4611483.070	0.000	691.712	691.712	73.732252	0.000	0.252	0.00	0.00	691.712	691.704	691.704
RECTA KV 14165	280.000	356286.965	4611491.090	0.000	691.731	691.731	73.732252	0.000	1.664	0.00	0.00	691.731	691.923	691.923
RECTA Rampa	300.000	356305.287	4611499.110	0.000	691.775	691.775	73.732252	0.000	2.401	0.00	0.00	691.775	692.355	692.355
RECTA Rampa	320.000	356323.609	4611507.130	0.000	691.823	691.823	73.732252	0.000	2.401	0.00	0.00	691.823	691.770	691.770
RECTA Rampa	340.000	356341.930	4611515.150	0.000	691.871	691.871	73.732252	0.000	2.401	0.00	0.00	691.871	692.188	692.188
RECTA Rampa	360.000	356360.252	4611523.170	0.000	691.919	691.919	73.732252	0.000	2.401	0.00	0.00	691.919	691.785	691.785
RECTA Rampa	380.000	356378.573	4611531.190	0.000	691.967	691.967	73.732252	0.000	2.401	0.00	0.00	691.967	691.844	691.844
RECTA KV -36742	400.000	356396.895	4611539.211	0.000	692.012	692.012	73.732252	0.000	2.015	0.00	0.00	692.012	692.250	692.250
CIRC. KV -36742	411.307	356407.253	4611543.745	-450.000	692.033	692.033	73.732252	0.000	1.707	0.00	0.00	692.033	692.096	692.096
CIRC. KV -36742	420.000	356415.182	4611547.307	-450.000	692.047	692.047	72.502466	0.000	1.470	0.00	0.00	692.047	692.003	692.003
CIRC. Rampa	440.000	356433.153	4611556.081	-450.000	692.071	692.071	69.673045	0.000	1.040	0.00	0.00	692.071	692.050	692.050
RECTA Rampa	447.361	356439.667	4611559.509	0.000	692.079	692.079	68.631673	0.000	1.040	0.00	0.00	692.079	691.911	691.911
RECTA Rampa	460.000	356450.802	4611565.488	0.000	692.092	692.092	68.631673	0.000	1.040	0.00	0.00	692.092	691.946	691.946
RECTA Rampa	480.000	356468.423	4611574.949	0.000	692.113	692.113	68.631673	0.000	1.040	0.00	0.00	692.113	691.851	691.851
RECTA Rampa	500.000	356486.044	4611584.409	0.000	692.134	692.134	68.631673	0.000	1.040	0.00	0.00	692.134	692.034	692.034
RECTA Rampa	520.000	356503.665	4611593.870	0.000	692.155	692.155	68.631673	0.000	1.040	0.00	0.00	692.155	691.918	691.918
RECTA Rampa	540.000	356521.286	4611603.331	0.000	692.175	692.175	68.631673	0.000	1.040	0.00	0.00	692.175	691.918	691.918
RECTA Rampa	560.000	356538.907	4611612.792	0.000	692.196	692.196	68.631673	0.000	1.040	0.00	0.00	692.196	691.984	691.984
CIRC. Rampa	576.153	356553.138	4611620.432	600.000	692.213	692.213	68.631673	0.000	1.040	0.00	0.00	692.213	692.035	692.035
CIRC. Rampa	580.000	356556.533	4611622.241	600.000	692.217	692.217	69.039891	0.000	1.040	0.00	0.00	692.217	692.049	692.049
CIRC. Rampa	600.000	356574.367	4611631.293	600.000	692.238	692.238	71.161957	0.000	1.040	0.00	0.00	692.238	692.058	692.058
CIRC. Rampa	620.000	356592.492	4611639.744	600.000	692.259	692.259	73.284023	0.000	1.040	0.00	0.00	692.259	692.181	692.181
RECTA Rampa	628.242	356600.042	4611643.051	0.000	692.267	692.267	74.158553	0.000	1.040	0.00	0.00	692.267	692.108	692.108
RECTA Rampa	640.000	356610.845	4611647.693	0.000	692.279	692.279	74.158553	0.000	1.040	0.00	0.00	692.279	692.077	692.077
RECTA Rampa	660.000	356629.219	4611655.591	0.000	692.300	692.300	74.158553	0.000	1.040	0.00	0.00	692.300	692.083	692.083
RECTA Rampa	680.000	356647.594	4611663.488	0.000	692.321	692.321	74.158553	0.000	1.040	0.00	0.00	692.321	692.094	692.094
RECTA Rampa	700.000	356665.969	4611671.385	0.000	692.342	692.342	74.158553	0.000	1.040	0.00	0.00	692.342	692.210	692.210
RECTA Rampa	720.000	356684.344	4611679.282	0.000	692.363	692.363	74.158553	0.000	1.040	0.00	0.00	692.363	692.415	692.415
RECTA Rampa	740.000	356702.719	4611687.180	0.000	692.383	692.383	74.158553	0.000	1.040	0.00	0.00	692.383	692.425	692.425
RECTA Rampa	760.000	356721.093	4611695.077	0.000	692.404	692.404	74.158553	0.000	1.040	0.00	0.00	692.404	692.341	692.341
RECTA Rampa	780.000	356739.468	4611702.974	0.000	692.425	692.425	74.158553	0.000	1.040	0.00	0.00	692.425	692.320	692.320
RECTA KV 58812	800.000	356757.843	4611710.871	0.000	692.447	692.447	74.158553	0.000	1.186	0.00	0.00	692.447	692.317	692.317
RECTA KV 58812	820.000	356776.218	4611718.768	0.000	692.474	692.474	74.158553	0.000	1.526	0.00	0.00	692.474	692.283	692.283
RECTA KV 58812	840.000	356794.593	4611726.666	0.000	692.508	692.508	74.158553	0.000	1.866	0.00	0.00	692.508	692.348	692.348

Istram 20.08.08.26 11/02/21 10:49:36 200009 pagina 2
PROYECTO : ESTUDIO INFORMATIVO DE LA INTEGRACION DEL FFCC EN VALLADOLID
GRUPO : 9 : EJES ANCHO IB
EJE : 49 : VIA 5 IB - VIA 1 IB

*** PUNTOS DEL EJE EN PLANTA ***

TIPO	P.K.	X	Y	RADIO	Z RAS IZ.	Z RAS DR.	AZIMUT	DIST. EJE	PEN(o/oo)	PERAL_I	PERAL_D	HILO BAJO	ZT (eje)	Z TERR.
RECTA Rampa	860.000	356812.968	4611734.563	0.000	692.545	692.545	74.158553	0.000	1.890	0.00	0.00	692.545	692.373	692.373
RECTA Rampa	880.000	356831.342	4611742.460	0.000	692.583	692.583	74.158553	0.000	1.890	0.00	0.00	692.583	692.443	692.443
RECTA Rampa	900.000	356849.717	4611750.357	0.000	692.621	692.621	74.158553	0.000	1.890	0.00	0.00	692.621	692.398	692.398
RECTA Rampa	920.000	356868.092	4611758.254	0.000	692.659	692.659	74.158553	0.000	1.890	0.00	0.00	692.659	692.399	692.399
CLOT. Rampa	931.404	356878.569	4611762.757	-1000000.000	692.680	692.680	74.158553	0.000	1.890	0.00	0.00	692.680	692.488	692.488
CLOT. KV 15811	940.000	356886.467	4611766.152	-27597.176	692.698	692.698	74.148638	0.000	2.320	0.00	0.00	692.698	692.357	692.357
CLOT. KV 15811	960.000	356904.835	4611774.064	-8295.747	692.757	692.757	74.048829	0.000	3.585	0.00	0.00	692.757	692.546	692.546
CLOT. KV 15811	980.000	356923.185	4611782.020	-4881.578	692.841	692.841	73.841676	0.000	4.850	0.00	0.00	692.841	692.761	692.761
CLOT. Rampa	1000.000	356941.501	4611790.051	-3458.294	692.942	692.942	73.527178	0.000	5.053	0.00	0.00	692.942	692.750	692.750
CLOT. Rampa	1020.000	356959.771	4611798.189	-2677.606	693.043	693.043	73.105336	0.000	5.053	0.00	0.00	693.043	692.825	692.825
CLOT. Rampa	1040.000	356977.979	4611806.462	-2184.474	693.144	693.144	72.576150	0.000	5.053	0.00	0.00	693.144	692.985	692.985
CLOT. Rampa	1060.000	356996.111	4611814.901	-1844.732	693.245	693.245	71.939619	0.000	5.053	0.00	0.00	693.245	693.494	693.494
CLOT. Rampa	1080.000	357014.151	4611823.537	-1596.444	693.346	693.346	71.195744	0.000	5.053	0.00	0.00	693.346	693.154	693.154
CLOT. Rampa	1100.000	357032.081	4611832.398	-1407.063	693.447	693.447	70.344524	0.000	5.053	0.00	0.00	693.447	693.373	693.373
CLOT. Rampa	1120.000	357049.883	4611841.513	-1257.848	693.549	693.549	69.385960	0.000	5.053	0.00	0.00	693.549	693.315	693.315
CLOT. Rampa	1140.000	357067.537	4611850.910	-1137.247	693.650	693.650	68.320052	0.000	5.053	0.00	0.00	693.650	693.400	693.400
CLOT. Rampa	1160.000	357085.024	4611860.616	-1037.748	693.751	693.751	67.146799	0.000	5.053	0.00	0.00	693.751	693.644	693.644
CIRC. Rampa	1178.561	357101.083	4611869.922	-959.816	693.844	693.844	65.961928	0.000	5.053	0.00	0.00	693.844	693.788	693.788
CIRC. Rampa	1180.000	357102.321	4611870.657	-959.816	693.852	693.852	65.866479	0.000	5.053	0.00	0.00	693.852	693.815	693.815
CIRC. Rampa	1200.000	357119.406	4611881.052	-959.816	693.953	693.953	64.539934	0.000	5.053	0.00	0.00	693.953	693.786	693.786
CIRC. KV -77169	1220.000	357136.272	4611891.801	-959.816	694.053	694.053	63.213388	0.000	4.931	0.00	0.00	694.053	694.041	694.041
CIRC. KV -77169	1240.000	357152.910	4611902.899	-959.816	694.149	694.149	61.886842	0.000	4.672	0.00	0.00	694.149	693.954	693.954
CIRC. KV -77169	1260.000	357169.313	4611914.341	-959.816	694.240	694.240	60.560297	0.000	4.412	0.00	0.00	694.240	693.979	693.979
CIRC. KV -77169	1280.000	357185.474	4611926.123	-959.816	694.326	694.326	59.233751	0.000	4.153	0.00	0.00	694.326	694.049	694.049
CIRC. KV -77169	1300.000	357201.386	4611938.239	-959.816	694.406	694.406	57.907205	0.000	3.894	0.00	0.00	694.406	694.180	694.180
CIRC. Rampa	1320.000	357217.042	4611950.684	-959.816	694.482	694.482	56.580659	0.000	3.749	0.00	0.00	694.482	694.348	694.348
CIRC. Rampa	1340.000	357232.435	4611963.452	-959.816	694.557	694.557	55.254114	0.000	3.749	0.00	0.00	694.557	694.842	694.842
CIRC. Rampa	1360.000	357247.559	4611976.538	-959.816	694.632	694.632	53.927568	0.000	3.749	0.00	0.00	694.632	694.382	694.382
CIRC. Rampa	1380.000	357262.407	4611989.936	-959.816	694.707	694.707	52.601022	0.000	3.749	0.00	0.00	694.707	694.435	694.435
CIRC. Rampa	1400.000	357276.973	4612003.641	-959.816	694.782	694.782	51.274477	0.000	3.749	0.00	0.00	694.782	694.473	694.473
CIRC. Rampa	1420.000	357291.250	4612017.647	-959.816	694.857	694.857	49.947931	0.000	3.749	0.00	0.00	694.857	694.698	694.698
CIRC. KV 76329	1440.000	357305.232	4612031.947	-959.816	694.932	694.932	48.621385	0.000	3.730	0.00	0.00	694.932	694.609	694.609
CIRC. KV 76329	1460.000	357318.913	4612046.535	-959.816	695.010	695.010	47.294839	0.000	4.052	0.00	0.00	695.010	694.876	694.876
CIRC. KV 76329	1480.000	357332.287	4612061.405	-959.816	695.094	695.094	45.968294	0.000	4.314	0.00	0.00	695.094	694.856	694.856
CIRC. KV 76329	1500.000	357345.349	4612076.550	-959.816	695.183	695.183	44.641748	0.000	4.576	0.00	0.00	695.183	695.060	695.060
CIRC. Rampa	1520.000	357358.092	4612091.965	-959.816	695.277	695.277	43.315202	0.000	4.797	0.00	0.00	695.277	695.215	695.215
CIRC. Rampa	1540.000	357370.511	4612107.641	-959.816	695.373	695.373	41.988657	0.000	4.797	0.00	0.00	695.373	695.321	695.321
CIRC. Rampa	1560.000	357382.601	4612123.573	-959.816	695.469	695.469	40.662111	0.000	4.797	0.00	0.00	695.469	695.437	695.437
CIRC. Rampa	1580.000	357394.356	4612139.753	-959.816	695.565	695.565	39.335565	0.000	4.797	0.00	0.00	695.565	695.529	695.529
CIRC. Rampa	1600.000	357405.772	4612156.175	-959.816	695.661	695.661	38.009019	0.000	4.797	0.00	0.00	695.661	695.783	695.783
CIRC. Rampa	1620.000	357416.842	4612172.831	-959.816	695.757	695.757	36.682474	0.000	4.797	0.00	0.00	695.757	695.649	695.649
CLOT. Rampa	1632.676	357423.679	4612183.506	-959.816	695.818	695.818	35.841696	0.000	4.797	0.00	0.00	695.818	695.460	695.460
CLOT. Rampa	1640.000	357427.564	4612189.714	-1016.956	695.853	695.853	35.369575	0.000	4.797	0.00	0.00	695.853	695.868	695.868
CLOT. Rampa	1660.000	357437.954	4612206.803	-1214.379	695.949	695.949	34.219335	0.000	4.797	0.00	0.00	695.949	695.798	695.798
CLOT. KV -111781	1680.000	357448.062	4612224.060	-1506.921	696.043	696.043	33.272636	0.000	4.631	0.00	0.00	696.043	696.042	696.042
CLOT. KV -111781	1700.000	357457.939	4612241.451	-1985.137	696.134	696.134	32.529480	0.000	4.452	0.00	0.00	696.134	695.896	695.896
CLOT. KV -111781	1720.000	357467.641	4612258.940	-2907.971	696.221	696.221	31.989864	0.000	4.273	0.00	0.00	696.221	696.171	696.171
CLOT. KV -111781	1740.000	357477.222	4612276.496	-5434.157	696.305	696.305	31.653790	0.000	4.094	0.00	0.00	696.305	695.680	695.680
CLOT. KV -111781	1760.000	357486.739	4612294.086	-41390.683	696.385	696.385	31.521258	0.000	3.915	0.00	0.00	696.385	696.316	696.316
RECTA KV -111781	1763.023	357488.175	4612296.746	0.000	696.397	696.397	31.518933	0.000	3.888	0.00	0.00	696.397	696.324	696.324

Istram 20.08.08.26 11/02/21 10:49:36 200009 pagina 3
PROYECTO : ESTUDIO INFORMATIVO DE LA INTEGRACION DEL FFCC EN VALLADOLID
GRUPO : 9 : EJES ANCHO IB
EJE : 49 : VIA 5 IB - VIA 1 IB

*** PUNTOS DEL EJE EN PLANTA ***

TIPO	P.K.	X	Y	RADIO	Z RAS IZ.	Z RAS DR.	AZIMUT	DIST. EJE	PEN(o/oo)	PERAL_I	PERAL_D	HILO BAJO	ZT (eje)	Z TERR.
RECTA Rampa	1780.000	357496.241	4612311.685	0.000	696.463	696.463	31.518933	0.000	3.885	0.00	0.00	696.463	696.318	696.318
RECTA Rampa	1800.000	357505.744	4612329.283	0.000	696.540	696.540	31.518933	0.000	3.885	0.00	0.00	696.540	696.466	696.466
RECTA Rampa	1820.000	357515.246	4612346.882	0.000	696.618	696.618	31.518933	0.000	3.885	0.00	0.00	696.618	695.686	695.686
RECTA Rampa	1840.000	357524.748	4612364.480	0.000	696.696	696.696	31.518933	0.000	3.885	0.00	0.00	696.696	696.399	696.399
RECTA Rampa	1860.000	357534.251	4612382.079	0.000	696.773	696.773	31.518933	0.000	3.885	0.00	0.00	696.773	696.625	696.625
RECTA Rampa	1880.000	357543.753	4612399.677	0.000	696.851	696.851	31.518933	0.000	3.885	0.00	0.00	696.851	696.622	696.622
RECTA KV -14675	1900.000	357553.256	4612417.275	0.000	696.920	696.920	31.518933	0.000	2.794	0.00	0.00	696.920	696.723	696.723
RECTA KV -14675	1920.000	357562.758	4612434.874	0.000	696.962	696.962	31.518933	0.000	1.431	0.00	0.00	696.962	696.759	696.759
RECTA KV -14675	1940.000	357572.260	4612452.472	0.000	696.977	696.977	31.518933	0.000	0.068	0.00	0.00	696.977	696.498	696.498
RECTA KV -14675	1960.000	357581.763	4612470.071	0.000	696.965	696.965	31.518933	0.000	-1.295	0.00	0.00	696.965	696.708	696.708
RECTA Pendiente	1980.000	357591.265	4612487.669	0.000	696.934	696.934	31.518933	0.000	-1.567	0.00	0.00	696.934	696.203	696.203
CLOT. Pendiente	1980.276	357591.396	4612487.912	1000000.000	696.934	696.934	31.518933	0.000	-1.567	0.00	0.00	696.934	696.213	696.213
CIRC. Pendiente	1990.276	357596.147	4612496.711	85000.000	696.918	696.918	31.522678	0.000	-1.567	0.00	0.00	696.918	696.536	696.536
CIRC. Pendiente	2000.000	357600.769	4612505.267	85000.000	696.903	696.903	31.529961	0.000	-1.567	0.00	0.00	696.903	696.616	696.616
CIRC. Pendiente	2020.000	357610.276	4612522.863	85000.000	696.872	696.872	31.544941	0.000	-1.567	0.00	0.00	696.872	696.477	696.477
CIRC. Pendiente	2040.000	357619.788	4612540.456	85000.000	696.840	696.840	31.559920	0.000	-1.567	0.00	0.00	696.840	696.373	696.373
CLOT. Pendiente	2057.812	357628.262	4612556.123	85000.000	696.812	696.812	31.573261	0.000	-1.567	0.00	0.00	696.812	696.792	696.792
CLOT. Pendiente	2060.000	357629.303	4612558.047	108804.697	696.809	696.809	31.574720	0.000	-1.567	0.00	0.00	696.809	696.724	696.724
RECTA Pendiente	2067.812	357633.021	4612564.918	0.000	696.797	696.797	31.577005	0.000	-1.567	0.00	0.00	696.797	696.725	696.725
RECTA KV 47093	2080.000	357638.822	4612575.637	0.000	696.777	696.777	31.577005	0.000	-1.560	0.00	0.00	696.777	696.737	696.737
RECTA KV 47093	2100.000	357648.340	4612593.227	0.000	696.751	696.751	31.577005	0.000	-1.135	0.00	0.00	696.751	696.740	696.740
RECTA KV 47093	2120.000	357657.859	4612610.817	0.000	696.732	696.732	31.577005	0.000	-0.710	0.00	0.00	696.732	696.731	696.731
RECTA KV 47093	2140.000	357667.377	4612628.406	0.000	696.722	696.722	31.577005	0.000	-0.286	0.00	0.00	696.722	696.685	696.685
RECTA KV 47093	2160.000	357676.895	4612645.996	0.000	696.721	696.721	31.577005	0.000	0.139	0.00	0.00	696.721	696.676	696.676
RECTA KV 47093	2180.000	357686.414	4612663.586	0.000	696.728	696.728	31.577005	0.000	0.564	0.00	0.00	696.728	696.772	696.772
RECTA Rampa	2200.000	357695.932	4612681.176	0.000	696.743	696.743	31.577005	0.000	0.981	0.00	0.00	696.743	696.637	696.637
RECTA Rampa	2220.000	357705.451	4612698.766	0.000	696.763	696.763	31.577005	0.000	0.981	0.00	0.00	696.763	696.431	696.431
RECTA Rampa	2240.000	357714.969	4612716.355	0.000	696.782	696.782	31.577005	0.000	0.981	0.00	0.00	696.782	696.399	696.399
RECTA Rampa	2260.000	357724.487	4612733.945	0.000	696.802	696.802	31.577005	0.000	0.981	0.00	0.00	696.802	696.382	696.382
RECTA Rampa	2280.000	357734.006	4612751.535	0.000	696.822	696.822	31.577005	0.000	0.981	0.00	0.00	696.822	696.711	696.711
RECTA Rampa	2300.000	357743.524	4612769.125	0.000	696.841	696.841	31.577005	0.000	0.981	0.00	0.00	696.841	696.711	696.711
RECTA Rampa	2320.000	357753.043	4612786.714	0.000	696.861	696.861	31.577005	0.000	0.981	0.00	0.00	696.861	696.576	696.576
RECTA Rampa	2340.000	357762.561	4612804.304	0.000	696.880	696.880	31.577005	0.000	0.981	0.00	0.00	696.880	696.252	696.252
RECTA Rampa	2360.000	357772.079	4612821.894	0.000	696.900	696.900	31.577005	0.000	0.981	0.00	0.00	696.900	696.631	696.631
RECTA Rampa	2380.000	357781.598	4612839.484	0.000	696.920	696.920	31.577005	0.000	0.981	0.00	0.00	696.920	696.334	696.334
RECTA Rampa	2400.000	357791.116	4612857.073	0.000	696.939	696.939	31.577005	0.000	0.981	0.00	0.00	696.939	696.609	696.609
RECTA Rampa	2420.000	357800.635	4612874.663	0.000	696.959	696.959	31.577005	0.000	0.981	0.00	0.00	696.959	696.562	696.562
RECTA Rampa	2440.000	357810.153	4612892.253	0.000	696.979	696.979	31.577005	0.000	0.981	0.00	0.00	696.979	696.297	696.297
RECTA KV -65205	2460.000	357819.672	4612909.843	0.000	696.996	696.996	31.577005	0.000	0.712	0.00	0.00	696.996	696.481	696.481
RECTA KV -65205	2480.000	357829.190	4612927.433	0.000	697.007	697.007	31.577005	0.000	0.405	0.00	0.00	697.007	696.593	696.593
RECTA KV -65205	2500.000	357838.708	4612945.022	0.000	697.012	697.012	31.577005	0.000	0.098	0.00	0.00	697.012	696.222	696.222
RECTA KV -65205	2520.000	357848.227	4612962.612	0.000	697.011	697.011	31.577005	0.000	-0.209	0.00	0.00	697.011	696.313	696.313
RECTA KV -65205	2540.000	357857.745	4612980.202	0.000	697.004	697.004	31.577005	0.000	-0.515	0.00	0.00	697.004	696.360	696.360
RECTA Pendiente	2560.000	357867.264	4612997.792	0.000	696.993	696.993	31.577005	0.000	-0.553	0.00	0.00	696.993	696.476	696.476
RECTA Pendiente	2580.000	357876.782	4613015.381	0.000	696.982	696.982	31.577005	0.000	-0.553	0.00	0.00	696.982	696.262	696.262
RECTA Pendiente	2600.000	357886.300	4613032.971	0.000	696.971	696.971	31.577005	0.000	-0.553	0.00	0.00	696.971	696.653	696.653
RECTA Pendiente	2620.000	357895.819	4613050.561	0.000	696.959	696.959	31.577005	0.000	-0.553	0.00	0.00	696.959	696.255	696.255
RECTA Pendiente	2640.000	357905.337	4613068.151	0.000	696.948	696.948	31.577005	0.000	-0.553	0.00	0.00	696.948	696.297	696.297
RECTA Pendiente	2660.000	357914.856	4613085.740	0.000	696.937	696.937	31.577005	0.000	-0.553	0.00	0.00	696.937	696.687	696.687
RECTA Pendiente	2680.000	357924.374	4613103.330	0.000	696.926	696.926	31.577005	0.000	-0.553	0.00	0.00	696.926	696.532	696.532

Istram 20.08.08.26 11/02/21 10:49:36 200009 pagina 4
PROYECTO : ESTUDIO INFORMATIVO DE LA INTEGRACION DEL FFCC EN VALLADOLID
GRUPO : 9 : EJES ANCHO IB
EJE : 49 : VIA 5 IB - VIA 1 IB

*** PUNTOS DEL EJE EN PLANTA ***

TIPO	P.K.	X	Y	RADIO	Z RAS IZ.	Z RAS DR.	AZIMUT	DIST. EJE	PEN(o/oo)	PERAL_I	PERAL_D	HILO BAJO	ZT (eje)	Z TERR.
RECTA Pendiente	2700.000	357933.892	4613120.920	0.000	696.915	696.915	31.577005	0.000	-0.553	0.00	0.00	696.915	696.829	696.829
RECTA Pendiente	2720.000	357943.411	4613138.510	0.000	696.904	696.904	31.577005	0.000	-0.553	0.00	0.00	696.904	696.480	696.480
RECTA Pendiente	2740.000	357952.929	4613156.099	0.000	696.893	696.893	31.577005	0.000	-0.553	0.00	0.00	696.893	696.373	696.373
RECTA Pendiente	2760.000	357962.448	4613173.689	0.000	696.882	696.882	31.577005	0.000	-0.553	0.00	0.00	696.882	696.032	696.032
RECTA Pendiente	2780.000	357971.966	4613191.279	0.000	696.871	696.871	31.577005	0.000	-0.553	0.00	0.00	696.871	696.692	696.692
RECTA Pendiente	2800.000	357981.485	4613208.869	0.000	696.860	696.860	31.577005	0.000	-0.553	0.00	0.00	696.860	696.130	696.130
RECTA Pendiente	2820.000	357991.003	4613226.459	0.000	696.849	696.849	31.577005	0.000	-0.553	0.00	0.00	696.849	696.498	696.498
RECTA Pendiente	2840.000	358000.521	4613244.048	0.000	696.838	696.838	31.577005	0.000	-0.553	0.00	0.00	696.838	696.374	696.374
RECTA Pendiente	2860.000	358010.040	4613261.638	0.000	696.827	696.827	31.577005	0.000	-0.553	0.00	0.00	696.827	696.522	696.522
RECTA Pendiente	2880.000	358019.558	4613279.228	0.000	696.816	696.816	31.577005	0.000	-0.553	0.00	0.00	696.816	696.303	696.303
RECTA Pendiente	2900.000	358029.077	4613296.818	0.000	696.805	696.805	31.577005	0.000	-0.553	0.00	0.00	696.805	696.576	696.576
RECTA Pendiente	2920.000	358038.595	4613314.407	0.000	696.794	696.794	31.577005	0.000	-0.553	0.00	0.00	696.794	696.396	696.396
RECTA Pendiente	2940.000	358048.113	4613331.997	0.000	696.783	696.783	31.577005	0.000	-0.553	0.00	0.00	696.783	696.279	696.279
RECTA KV 93917	2960.000	358057.632	4613349.587	0.000	696.773	696.773	31.577005	0.000	-0.406	0.00	0.00	696.773	696.527	696.527
RECTA KV 93917	2980.000	358067.150	4613367.177	0.000	696.767	696.767	31.577005	0.000	-0.193	0.00	0.00	696.767	696.637	696.637
RECTA KV 93917	3000.000	358076.669	4613384.766	0.000	696.765	696.765	31.577005	0.000	0.020	0.00	0.00	696.765	696.368	696.368
RECTA KV 93917	3020.000	358086.187	4613402.356	0.000	696.767	696.767	31.577005	0.000	0.233	0.00	0.00	696.767	696.683	696.683
RECTA Rampa	3040.000	358095.705	4613419.946	0.000	696.773	696.773	31.577005	0.000	0.299	0.00	0.00	696.773	696.561	696.561
RECTA Rampa	3060.000	358105.224	4613437.536	0.000	696.779	696.779	31.577005	0.000	0.299	0.00	0.00	696.779	696.615	696.615
RECTA Rampa	3080.000	358114.742	4613455.125	0.000	696.785	696.785	31.577005	0.000	0.299	0.00	0.00	696.785	696.781	696.781
RECTA Rampa	3100.000	358124.261	4613472.715	0.000	696.791	696.791	31.577005	0.000	0.299	0.00	0.00	696.791	696.721	696.721
RECTA Rampa	3120.000	358133.779	4613490.305	0.000	696.797	696.797	31.577005	0.000	0.299	0.00	0.00	696.797	697.440	697.440
RECTA KV -158129	3140.000	358143.298	4613507.895	0.000	696.802	696.802	31.577005	0.000	0.174	0.00	0.00	696.802	697.474	697.474
RECTA KV -158129	3160.000	358152.816	4613525.485	0.000	696.804	696.804	31.577005	0.000	0.047	0.00	0.00	696.804	696.771	696.771
RECTA KV -158129	3180.000	358162.334	4613543.074	0.000	696.804	696.804	31.577005	0.000	-0.079	0.00	0.00	696.804	697.481	697.481
RECTA KV -158129	3200.000	358171.853	4613560.664	0.000	696.801	696.801	31.577005	0.000	-0.206	0.00	0.00	696.801	696.800	696.800
RECTA Pendiente	3220.000	358181.371	4613578.254	0.000	696.797	696.797	31.577005	0.000	-0.207	0.00	0.00	696.797	697.415	697.415
RECTA Pendiente	3240.000	358190.890	4613595.844	0.000	696.792	696.792	31.577005	0.000	-0.207	0.00	0.00	696.792	696.651	696.651
RECTA Pendiente	3260.000	358200.408	4613613.433	0.000	696.788	696.788	31.577005	0.000	-0.207	0.00	0.00	696.788	696.558	696.558
RECTA Pendiente	3280.000	358209.926	4613631.023	0.000	696.784	696.784	31.577005	0.000	-0.207	0.00	0.00	696.784	696.483	696.483
CLOT. Pendiente	3280.143	358209.994	4613631.149	1000000.000	696.784	696.784	31.577005	0.000	-0.207	0.00	0.00	696.784	696.486	696.486
CLOT. Pendiente	3300.000	358219.445	4613648.613	302158.271	696.780	696.780	31.579097	0.000	-0.207	0.00	0.00	696.780	696.612	696.612
CIRC. Pendiente	3310.143	358224.273	4613657.533	200000.000	696.778	696.778	31.581780	0.000	-0.207	0.00	0.00	696.778	696.646	696.646
CIRC. Pendiente	3320.000	358228.965	4613666.202	200000.000	696.776	696.776	31.584918	0.000	-0.207	0.00	0.00	696.776	696.442	696.442
CIRC. Pendiente	3340.000	358238.486	4613683.790	200000.000	696.772	696.772	31.591284	0.000	-0.207	0.00	0.00	696.772	696.521	696.521
CIRC. Pendiente	3360.000	358248.009	4613701.377	200000.000	696.768	696.768	31.597650	0.000	-0.207	0.00	0.00	696.768	696.648	696.648
CIRC. Pendiente	3380.000	358257.534	4613718.963	200000.000	696.763	696.763	31.604016	0.000	-0.207	0.00	0.00	696.763	696.586	696.586
CLOT. Pendiente	3387.720	358261.212	4613725.751	200000.000	696.762	696.762	31.606474	0.000	-0.207	0.00	0.00	696.762	696.463	696.463
CLOT. Pendiente	3400.000	358267.061	4613736.549	338600.912	696.759	696.759	31.609582	0.000	-0.207	0.00	0.00	696.759	696.507	696.507
CLOT. Pendiente	3417.720	358275.583	4613752.129	-1000000.000	696.756	696.756	31.611248	0.000	-0.207	0.00	0.00	696.756	696.309	696.309
CLOT. Pendiente	3420.000	358276.589	4613754.133	-1000000.000	696.755	696.755	31.611221	0.000	-0.207	0.00	0.00	696.755	696.260	696.260
CLOT. Pendiente	3440.000	358286.117	4613771.718	-269299.529	696.751	696.751	31.608615	0.000	-0.207	0.00	0.00	696.751	696.348	696.348
CIRC. Pendiente	3447.720	358289.794	4613778.506	-200000.000	696.749	696.749	31.606474	0.000	-0.207	0.00	0.00	696.749	696.493	696.493
CIRC. Pendiente	3460.000	358295.643	4613789.304	-200000.000	696.747	696.747	31.602565	0.000	-0.207	0.00	0.00	696.747	696.647	696.647
CIRC. Pendiente	3480.000	358305.167	4613806.890	-200000.000	696.743	696.743	31.596199	0.000	-0.207	0.00	0.00	696.743	696.807	696.807
CIRC. Pendiente	3500.000	358314.690	4613824.477	-200000.000	696.739	696.739	31.589832	0.000	-0.207	0.00	0.00	696.739	696.727	696.727
CIRC. Pendiente	3520.000	358324.211	4613842.066	-200000.000	696.735	696.735	31.583466	0.000	-0.207	0.00	0.00	696.735	696.490	696.490
CLOT. Pendiente	3528.430	358328.224	4613849.479	-200000.000	696.733	696.733	31.580783	0.000	-0.207	0.00	0.00	696.733	696.478	696.478
CLOT. Pendiente	3540.000	358333.731	4613859.655	-325555.181	696.730	696.730	31.577810	0.000	-0.207	0.00	0.00	696.730	696.464	696.464
RECTA Pendiente	3558.430	358342.502	4613875.864	0.000	696.727	696.727	31.576008	0.000	-0.207	0.00	0.00	696.727	696.394	696.394

Istram 20.08.08.26 11/02/21 10:49:36 200009 pagina 5
PROYECTO : ESTUDIO INFORMATIVO DE LA INTEGRACION DEL FFCC EN VALLADOLID
GRUPO : 9 : EJES ANCHO IB
EJE : 49 : VIA 5 IB - VIA 1 IB

*** PUNTOS DEL EJE EN PLANTA ***

TIPO	P.K.	X	Y	RADIO	Z RAS IZ.	Z RAS DR.	AZIMUT	DIST. EJE	PEN(o/oo)	PERAL_I	PERAL_D	HILO BAJO	ZT (eje)	Z TERR.
RECTA Pendiente	3560.000	358343.249	4613877.245	0.000	696.726	696.726	31.576008	0.000	-0.207	0.00	0.00	696.726	696.350	696.350
RECTA Pendiente	3580.000	358352.767	4613894.835	0.000	696.722	696.722	31.576008	0.000	-0.207	0.00	0.00	696.722	696.329	696.329
RECTA KV 188107	3600.000	358362.285	4613912.425	0.000	696.719	696.719	31.576008	0.000	-0.118	0.00	0.00	696.719	697.669	697.669
RECTA KV 188107	3620.000	358371.803	4613930.014	0.000	696.717	696.717	31.576008	0.000	-0.012	0.00	0.00	696.717	699.085	699.085
RECTA KV 188107	3640.000	358381.322	4613947.604	0.000	696.718	696.718	31.576008	0.000	0.095	0.00	0.00	696.718	705.187	705.187
RECTA KV 188107	3660.000	358390.840	4613965.194	0.000	696.721	696.721	31.576008	0.000	0.201	0.00	0.00	696.721	696.477	696.477
RECTA KV 188107	3680.000	358400.358	4613982.784	0.000	696.726	696.726	31.576008	0.000	0.307	0.00	0.00	696.726	696.340	696.340
RECTA KV 188107	3700.000	358409.876	4614000.374	0.000	696.733	696.733	31.576008	0.000	0.414	0.00	0.00	696.733	696.235	696.235
RECTA Rampa	3720.000	358419.394	4614017.964	0.000	696.743	696.743	31.576008	0.000	0.500	0.00	0.00	696.743	696.366	696.366
RECTA Rampa	3740.000	358428.912	4614035.554	0.000	696.753	696.753	31.576008	0.000	0.500	0.00	0.00	696.753	696.402	696.402
RECTA Rampa	3760.000	358438.430	4614053.144	0.000	696.763	696.763	31.576008	0.000	0.500	0.00	0.00	696.763	696.335	696.335
RECTA Rampa	3780.000	358447.948	4614070.734	0.000	696.773	696.773	31.576008	0.000	0.500	0.00	0.00	696.773	696.296	696.296
RECTA Rampa	3800.000	358457.467	4614088.324	0.000	696.783	696.783	31.576008	0.000	0.500	0.00	0.00	696.783	696.549	696.549
RECTA Rampa	3820.000	358466.985	4614105.914	0.000	696.793	696.793	31.576008	0.000	0.500	0.00	0.00	696.793	696.416	696.416
RECTA Rampa	3840.000	358476.503	4614123.504	0.000	696.803	696.803	31.576008	0.000	0.500	0.00	0.00	696.803	696.408	696.408
RECTA Rampa	3860.000	358486.021	4614141.093	0.000	696.813	696.813	31.576008	0.000	0.500	0.00	0.00	696.813	696.475	696.475
RECTA Rampa	3880.000	358495.539	4614158.683	0.000	696.823	696.823	31.576008	0.000	0.500	0.00	0.00	696.823	696.110	696.110
RECTA Rampa	3900.000	358505.057	4614176.273	0.000	696.833	696.833	31.576008	0.000	0.500	0.00	0.00	696.833	696.451	696.451
RECTA KV -1215486	3920.000	358514.575	4614193.863	0.000	696.843	696.843	31.576008	0.000	0.493	0.00	0.00	696.843	696.066	696.066
RECTA KV -1215486	3940.000	358524.094	4614211.453	0.000	696.852	696.852	31.576008	0.000	0.476	0.00	0.00	696.852	696.644	696.644
RECTA KV -1215486	3960.000	358533.612	4614229.043	0.000	696.862	696.862	31.576008	0.000	0.460	0.00	0.00	696.862	696.258	696.258
RECTA KV -1215486	3980.000	358543.130	4614246.633	0.000	696.871	696.871	31.576008	0.000	0.444	0.00	0.00	696.871	696.316	696.316
RECTA KV -1215486	4000.000	358552.648	4614264.223	0.000	696.880	696.880	31.576008	0.000	0.427	0.00	0.00	696.880	696.570	696.570
RECTA KV -1215486	4020.000	358562.166	4614281.813	0.000	696.888	696.888	31.576008	0.000	0.411	0.00	0.00	696.888	696.405	696.405
RECTA KV -1215486	4040.000	358571.684	4614299.403	0.000	696.896	696.896	31.576008	0.000	0.394	0.00	0.00	696.896	696.457	696.457
RECTA Rampa	4060.000	358581.202	4614316.993	0.000	696.904	696.904	31.576008	0.000	0.391	0.00	0.00	696.904	696.445	696.445
RECTA Rampa	4080.000	358590.721	4614334.583	0.000	696.912	696.912	31.576008	0.000	0.391	0.00	0.00	696.912	696.187	696.187
RECTA Rampa	4100.000	358600.239	4614352.172	0.000	696.919	696.919	31.576008	0.000	0.391	0.00	0.00	696.919	695.911	695.911
RECTA Rampa	4120.000	358609.757	4614369.762	0.000	696.927	696.927	31.576008	0.000	0.391	0.00	0.00	696.927	696.438	696.438
RECTA Rampa	4140.000	358619.275	4614387.352	0.000	696.935	696.935	31.576008	0.000	0.391	0.00	0.00	696.935	696.280	696.280
RECTA Rampa	4160.000	358628.793	4614404.942	0.000	696.943	696.943	31.576008	0.000	0.391	0.00	0.00	696.943	696.575	696.575
RECTA Rampa	4180.000	358638.311	4614422.532	0.000	696.951	696.951	31.576008	0.000	0.391	0.00	0.00	696.951	696.191	696.191
RECTA Rampa	4200.000	358647.829	4614440.122	0.000	696.958	696.958	31.576008	0.000	0.391	0.00	0.00	696.958	696.480	696.480
RECTA Rampa	4220.000	358657.347	4614457.712	0.000	696.966	696.966	31.576008	0.000	0.391	0.00	0.00	696.966	695.919	695.919
RECTA Rampa	4240.000	358666.866	4614475.302	0.000	696.974	696.974	31.576008	0.000	0.391	0.00	0.00	696.974	696.496	696.496
RECTA Rampa	4260.000	358676.384	4614492.892	0.000	696.982	696.982	31.576008	0.000	0.391	0.00	0.00	696.982	696.252	696.252
RECTA Rampa	4280.000	358685.902	4614510.482	0.000	696.990	696.990	31.576008	0.000	0.391	0.00	0.00	696.990	696.527	696.527
CIRC. Rampa	4292.444	358691.824	4614521.426	1000000.000	696.995	696.995	31.576008	0.000	0.391	0.00	0.00	696.995	696.410	696.410
CIRC. Rampa	4300.000	358695.420	4614528.072	1000000.000	696.998	696.998	31.576489	0.000	0.391	0.00	0.00	696.998	696.393	696.393
CIRC. Rampa	4320.000	358704.938	4614545.661	1000000.000	697.005	697.005	31.577762	0.000	0.391	0.00	0.00	697.005	696.742	696.742
CIRC. Rampa	4340.000	358714.457	4614563.251	1000000.000	697.013	697.013	31.579036	0.000	0.391	0.00	0.00	697.013	696.401	696.401
CIRC. Rampa	4360.000	358723.976	4614580.840	1000000.000	697.021	697.021	31.580309	0.000	0.391	0.00	0.00	697.021	696.679	696.679
CIRC. Rampa	4380.000	358733.496	4614598.429	1000000.000	697.029	697.029	31.581582	0.000	0.391	0.00	0.00	697.029	696.306	696.306
CIRC. Rampa	4400.000	358743.016	4614616.018	1000000.000	697.037	697.037	31.582855	0.000	0.391	0.00	0.00	697.037	696.372	696.372
CIRC. Rampa	4420.000	358752.536	4614633.607	1000000.000	697.044	697.044	31.584129	0.000	0.391	0.00	0.00	697.044	696.468	696.468
CIRC. Rampa	4440.000	358762.057	4614651.196	1000000.000	697.052	697.052	31.585402	0.000	0.391	0.00	0.00	697.052	696.275	696.275
CIRC. Rampa	4460.000	358771.577	4614668.784	1000000.000	697.060	697.060	31.586675	0.000	0.391	0.00	0.00	697.060	696.578	696.578
CLOT. Rampa	4471.852	358777.220	4614679.207	1000000.000	697.065	697.065	31.587430	0.000	0.391	0.00	0.00	697.065	696.387	696.387
CLOT. Rampa	4480.000	358781.099	4614686.372	1000000.000	697.068	697.068	31.587895	0.000	0.391	0.00	0.00	697.068	696.424	696.424
CLOT. Rampa	4500.000	358790.620	4614703.961	1000000.000	697.076	697.076	31.588591	0.000	0.391	0.00	0.00	697.076	696.857	696.857

Istram 20.08.08.26 11/02/21 10:49:36 200009 pagina 6
PROYECTO : ESTUDIO INFORMATIVO DE LA INTEGRACION DEL FFCC EN VALLADOLID
GRUPO : 9 : EJES ANCHO IB
EJE : 49 : VIA 5 IB - VIA 1 IB

*** PUNTOS DEL EJE EN PLANTA ***

TIPO	P.K.	X	Y	RADIO	Z RAS IZ.	Z RAS DR.	AZIMUT	DIST. EJE	PEN(o/oo)	PERAL_I	PERAL_D	HILO BAJO	ZT (eje)	Z TERR.
RECTA Rampa	4511.852	358796.263	4614714.383	0.000	697.080	697.080	31.588703	0.000	0.391	0.00	0.00	697.080	696.967	696.967
RECTA Rampa	4520.000	358800.142	4614721.549	0.000	697.083	697.083	31.588703	0.000	0.391	0.00	0.00	697.083	696.993	696.993
RECTA Rampa	4540.000	358809.664	4614739.137	0.000	697.091	697.091	31.588703	0.000	0.391	0.00	0.00	697.091	696.646	696.646
RECTA Rampa	4560.000	358819.185	4614756.725	0.000	697.099	697.099	31.588703	0.000	0.391	0.00	0.00	697.099	696.856	696.856
RECTA Rampa	4580.000	358828.707	4614774.313	0.000	697.107	697.107	31.588703	0.000	0.391	0.00	0.00	697.107	696.791	696.791
RECTA Rampa	4600.000	358838.228	4614791.901	0.000	697.115	697.115	31.588703	0.000	0.391	0.00	0.00	697.115	696.626	696.626
RECTA Rampa	4620.000	358847.750	4614809.489	0.000	697.123	697.123	31.588703	0.000	0.391	0.00	0.00	697.123	696.685	696.685
RECTA Rampa	4640.000	358857.272	4614827.077	0.000	697.130	697.130	31.588703	0.000	0.391	0.00	0.00	697.130	696.855	696.855
RECTA Rampa	4660.000	358866.793	4614844.665	0.000	697.138	697.138	31.588703	0.000	0.391	0.00	0.00	697.138	696.634	696.634
RECTA Rampa	4680.000	358876.315	4614862.253	0.000	697.146	697.146	31.588703	0.000	0.391	0.00	0.00	697.146	696.422	696.422
RECTA Rampa	4700.000	358885.837	4614879.841	0.000	697.154	697.154	31.588703	0.000	0.391	0.00	0.00	697.154	696.461	696.461
RECTA Rampa	4720.000	358895.358	4614897.429	0.000	697.162	697.162	31.588703	0.000	0.391	0.00	0.00	697.162	696.690	696.690
RECTA Rampa	4740.000	358904.880	4614915.017	0.000	697.169	697.169	31.588703	0.000	0.391	0.00	0.00	697.169	696.711	696.711
RECTA Rampa	4760.000	358914.402	4614932.605	0.000	697.177	697.177	31.588703	0.000	0.391	0.00	0.00	697.177	696.727	696.727
RECTA Rampa	4780.000	358923.923	4614950.193	0.000	697.185	697.185	31.588703	0.000	0.391	0.00	0.00	697.185	696.804	696.804
RECTA Rampa	4800.000	358933.445	4614967.781	0.000	697.193	697.193	31.588703	0.000	0.391	0.00	0.00	697.193	696.638	696.638
RECTA Rampa	4820.000	358942.967	4614985.369	0.000	697.201	697.201	31.588703	0.000	0.391	0.00	0.00	697.201	696.802	696.802
RECTA Rampa	4840.000	358952.488	4615002.957	0.000	697.208	697.208	31.588703	0.000	0.391	0.00	0.00	697.208	696.711	696.711
RECTA Rampa	4860.000	358962.010	4615020.545	0.000	697.216	697.216	31.588703	0.000	0.391	0.00	0.00	697.216	696.990	696.990
RECTA Rampa	4880.000	358971.531	4615038.133	0.000	697.224	697.224	31.588703	0.000	0.391	0.00	0.00	697.224	697.023	697.023
RECTA Rampa	4900.000	358981.053	4615055.721	0.000	697.232	697.232	31.588703	0.000	0.391	0.00	0.00	697.232	697.034	697.034
RECTA Rampa	4920.000	358990.575	4615073.309	0.000	697.240	697.240	31.588703	0.000	0.391	0.00	0.00	697.240	696.865	696.865
RECTA Rampa	4940.000	359000.096	4615090.897	0.000	697.247	697.247	31.588703	0.000	0.391	0.00	0.00	697.247	696.844	696.844
RECTA Rampa	4960.000	359009.618	4615108.485	0.000	697.255	697.255	31.588703	0.000	0.391	0.00	0.00	697.255	697.009	697.009
RECTA Rampa	4980.000	359019.140	4615126.073	0.000	697.263	697.263	31.588703	0.000	0.391	0.00	0.00	697.263	696.834	696.834
RECTA Rampa	5000.000	359028.661	4615143.661	0.000	697.271	697.271	31.588703	0.000	0.391	0.00	0.00	697.271	697.038	697.038
RECTA Rampa	5020.000	359038.183	4615161.249	0.000	697.279	697.279	31.588703	0.000	0.391	0.00	0.00	697.279	696.735	696.735
RECTA Rampa	5040.000	359047.705	4615178.837	0.000	697.287	697.287	31.588703	0.000	0.391	0.00	0.00	697.287	696.963	696.963
RECTA Rampa	5060.000	359057.226	4615196.425	0.000	697.294	697.294	31.588703	0.000	0.391	0.00	0.00	697.294	696.742	696.742
RECTA Rampa	5080.000	359066.748	4615214.013	0.000	697.302	697.302	31.588703	0.000	0.391	0.00	0.00	697.302	696.926	696.926
RECTA Rampa	5100.000	359076.270	4615231.601	0.000	697.310	697.310	31.588703	0.000	0.391	0.00	0.00	697.310	697.030	697.030
RECTA KV -46103	5120.000	359085.791	4615249.189	0.000	697.318	697.318	31.588703	0.000	0.374	0.00	0.00	697.318	696.799	696.799
RECTA KV -46103	5140.000	359095.313	4615266.777	0.000	697.325	697.325	31.588703	0.000	0.331	0.00	0.00	697.325	696.844	696.844
RECTA KV -46103	5160.000	359104.834	4615284.365	0.000	697.331	697.331	31.588703	0.000	0.287	0.00	0.00	697.331	696.903	696.903
RECTA KV -46103	5180.000	359114.356	4615301.953	0.000	697.336	697.336	31.588703	0.000	0.244	0.00	0.00	697.336	696.752	696.752
RECTA KV -46103	5200.000	359123.878	4615319.541	0.000	697.341	697.341	31.588703	0.000	0.201	0.00	0.00	697.341	697.053	697.053
RECTA KV -46103	5220.000	359133.399	4615337.129	0.000	697.344	697.344	31.588703	0.000	0.157	0.00	0.00	697.344	696.696	696.696
RECTA KV -46103	5240.000	359142.921	4615354.717	0.000	697.347	697.347	31.588703	0.000	0.114	0.00	0.00	697.347	696.634	696.634
RECTA KV -46103	5260.000	359152.443	4615372.305	0.000	697.349	697.349	31.588703	0.000	0.071	0.00	0.00	697.349	697.076	697.076
RECTA KV -46103	5280.000	359161.964	4615389.893	0.000	697.350	697.350	31.588703	0.000	0.027	0.00	0.00	697.350	697.469	697.469
RECTA Horizontal	5300.000	359171.486	4615407.481	0.000	697.350	697.350	31.588703	0.000	0.000	0.00	0.00	697.350	697.341	697.341
RECTA Horizontal	5320.000	359181.008	4615425.069	0.000	697.350	697.350	31.588703	0.000	0.000	0.00	0.00	697.350	697.005	697.005
RECTA Horizontal	5340.000	359190.529	4615442.657	0.000	697.350	697.350	31.588703	0.000	0.000	0.00	0.00	697.350	697.062	697.062
RECTA Horizontal	5360.000	359200.051	4615460.245	0.000	697.350	697.350	31.588703	0.000	0.000	0.00	0.00	697.350	697.009	697.009
RECTA Horizontal	5380.000	359209.573	4615477.833	0.000	697.350	697.350	31.588703	0.000	0.000	0.00	0.00	697.350	697.251	697.251
RECTA Horizontal	5400.000	359219.094	4615495.421	0.000	697.350	697.350	31.588703	0.000	0.000	0.00	0.00	697.350	697.138	697.138
RECTA Horizontal	5420.000	359228.616	4615513.009	0.000	697.350	697.350	31.588703	0.000	0.000	0.00	0.00	697.350	697.133	697.133
RECTA Horizontal	5440.000	359238.137	4615530.597	0.000	697.350	697.350	31.588703	0.000	0.000	0.00	0.00	697.350	697.230	697.230
RECTA Horizontal	5460.000	359247.659	4615548.185	0.000	697.350	697.350	31.588703	0.000	0.000	0.00	0.00	697.350	696.866	696.866
RECTA Horizontal	5480.000	359257.181	4615565.773	0.000	697.350	697.350	31.588703	0.000	0.000	0.00	0.00	697.350	697.107	697.107

Istram 20.08.08.26 11/02/21 10:49:36 200009 pagina 7
PROYECTO : ESTUDIO INFORMATIVO DE LA INTEGRACION DEL FFCC EN VALLADOLID
GRUPO : 9 : EJES ANCHO IB
EJE : 49 : VIA 5 IB - VIA 1 IB

*** PUNTOS DEL EJE EN PLANTA ***

TIPO	P.K.	X	Y	RADIO	Z RAS IZ.	Z RAS DR.	AZIMUT	DIST. EJE	PEN(o/oo)	PERAL_I	PERAL_D	HILO BAJO	ZT (eje)	Z TERR.
RECTA Horizontal	5500.000	359266.702	4615583.361	0.000	697.350	697.350	31.588703	0.000	0.000	0.00	0.00	697.350	697.185	697.185
RECTA Horizontal	5520.000	359276.224	4615600.949	0.000	697.350	697.350	31.588703	0.000	0.000	0.00	0.00	697.350	697.134	697.134
RECTA Horizontal	5540.000	359285.746	4615618.537	0.000	697.350	697.350	31.588703	0.000	0.000	0.00	0.00	697.350	696.913	696.913
RECTA KV 133923	5560.000	359295.267	4615636.125	0.000	697.351	697.351	31.588703	0.000	0.131	0.00	0.00	697.351	697.300	697.300
RECTA KV 133923	5580.000	359304.789	4615653.713	0.000	697.355	697.355	31.588703	0.000	0.280	0.00	0.00	697.355	697.244	697.244
RECTA KV 133923	5600.000	359314.311	4615671.301	0.000	697.362	697.362	31.588703	0.000	0.430	0.00	0.00	697.362	697.134	697.134
RECTA KV 133923	5620.000	359323.832	4615688.889	0.000	697.372	697.372	31.588703	0.000	0.579	0.00	0.00	697.372	697.159	697.159
RECTA KV 133923	5640.000	359333.354	4615706.477	0.000	697.386	697.386	31.588703	0.000	0.728	0.00	0.00	697.386	704.258	704.258
RECTA KV 133923	5660.000	359342.876	4615724.065	0.000	697.402	697.402	31.588703	0.000	0.878	0.00	0.00	697.402	697.282	697.282
CLOT. KV 133923	5678.068	359351.477	4615739.955	-1000000.000	697.419	697.419	31.588703	0.000	1.013	0.00	0.00	697.419	697.144	697.144
CLOT. KV 133923	5680.000	359352.397	4615741.653	-1000000.000	697.421	697.421	31.588700	0.000	1.027	0.00	0.00	697.421	697.092	697.092
CLOT. KV 133923	5700.000	359361.919	4615759.242	-1000000.000	697.443	697.443	31.588363	0.000	1.176	0.00	0.00	697.443	697.547	697.547
CIRC. KV 133923	5708.068	359365.760	4615766.337	-1500000.000	697.452	697.452	31.588066	0.000	1.237	0.00	0.00	697.452	697.598	697.598
CIRC. KV 133923	5720.000	359371.440	4615776.830	-1500000.000	697.468	697.468	31.587560	0.000	1.326	0.00	0.00	697.468	697.275	697.275
CIRC. Rampa	5740.000	359380.961	4615794.418	-1500000.000	697.495	697.495	31.586711	0.000	1.344	0.00	0.00	697.495	697.091	697.091
CIRC. Rampa	5760.000	359390.482	4615812.006	-1500000.000	697.521	697.521	31.585862	0.000	1.344	0.00	0.00	697.521	697.528	697.528
CIRC. Rampa	5780.000	359400.003	4615829.595	-1500000.000	697.548	697.548	31.585013	0.000	1.344	0.00	0.00	697.548	697.299	697.299
CIRC. Rampa	5800.000	359409.524	4615847.183	-1500000.000	697.575	697.575	31.584165	0.000	1.344	0.00	0.00	697.575	697.528	697.528
CIRC. Rampa	5820.000	359419.044	4615864.772	-1500000.000	697.602	697.602	31.583316	0.000	1.344	0.00	0.00	697.602	697.338	697.338
CLOT. Rampa	5839.593	359428.370	4615882.003	-1000000.000	697.628	697.628	31.582484	0.000	1.344	0.00	0.00	697.628	697.679	697.679
CLOT. Rampa	5840.000	359428.564	4615882.361	-1000000.000	697.629	697.629	31.582467	0.000	1.344	0.00	0.00	697.629	697.710	697.710
CLOT. Rampa	5860.000	359438.084	4615899.950	-1000000.000	697.656	697.656	31.581913	0.000	1.344	0.00	0.00	697.656	697.178	697.178
RECTA Rampa	5869.593	359442.650	4615908.387	0.000	697.669	697.669	31.581848	0.000	1.344	0.00	0.00	697.669	697.392	697.392
RECTA Rampa	5880.000	359447.604	4615917.539	0.000	697.683	697.683	31.581848	0.000	1.344	0.00	0.00	697.683	697.400	697.400
RECTA Rampa	5900.000	359457.123	4615935.128	0.000	697.710	697.710	31.581848	0.000	1.344	0.00	0.00	697.710	697.407	697.407
RECTA Rampa	5920.000	359466.643	4615952.717	0.000	697.736	697.736	31.581848	0.000	1.344	0.00	0.00	697.736	697.375	697.375
RECTA Rampa	5940.000	359476.163	4615970.306	0.000	697.763	697.763	31.581848	0.000	1.344	0.00	0.00	697.763	697.523	697.523
RECTA Rampa	5960.000	359485.683	4615987.895	0.000	697.790	697.790	31.581848	0.000	1.344	0.00	0.00	697.790	697.432	697.432
RECTA Rampa	5980.000	359495.202	4616005.484	0.000	697.817	697.817	31.581848	0.000	1.344	0.00	0.00	697.817	697.440	697.440
RECTA KV -127500	6000.000	359504.722	4616023.073	0.000	697.843	697.843	31.581848	0.000	1.198	0.00	0.00	697.843	697.647	697.647
RECTA KV -127500	6020.000	359514.242	4616040.662	0.000	697.865	697.865	31.581848	0.000	1.042	0.00	0.00	697.865	697.210	697.210
RECTA KV -127500	6040.000	359523.762	4616058.251	0.000	697.884	697.884	31.581848	0.000	0.885	0.00	0.00	697.884	697.497	697.497
RECTA KV -127500	6060.000	359533.281	4616075.840	0.000	697.900	697.900	31.581848	0.000	0.728	0.00	0.00	697.900	697.456	697.456
RECTA KV -127500	6080.000	359542.801	4616093.429	0.000	697.913	697.913	31.581848	0.000	0.571	0.00	0.00	697.913	697.454	697.454
RECTA KV -127500	6100.000	359552.321	4616111.019	0.000	697.923	697.923	31.581848	0.000	0.414	0.00	0.00	697.923	697.707	697.707
RECTA KV -127500	6120.000	359561.841	4616128.608	0.000	697.930	697.930	31.581848	0.000	0.257	0.00	0.00	697.930	697.503	697.503
RECTA KV -127500	6140.000	359571.360	4616146.197	0.000	697.934	697.934	31.581848	0.000	0.100	0.00	0.00	697.934	697.516	697.516
RECTA KV -127500	6160.000	359580.880	4616163.786	0.000	697.934	697.934	31.581848	0.000	-0.056	0.00	0.00	697.934	697.493	697.493
RECTA Pendiente	6180.000	359590.400	4616181.375	0.000	697.933	697.933	31.581848	0.000	-0.068	0.00	0.00	697.933	697.599	697.599
RECTA Pendiente	6200.000	359599.920	4616198.964	0.000	697.931	697.931	31.581848	0.000	-0.068	0.00	0.00	697.931	697.906	697.906
RECTA Pendiente	6220.000	359609.439	4616216.553	0.000	697.930	697.930	31.581848	0.000	-0.068	0.00	0.00	697.930	697.705	697.705
RECTA Pendiente	6240.000	359618.959	4616234.142	0.000	697.929	697.929	31.581848	0.000	-0.068	0.00	0.00	697.929	697.392	697.392
RECTA Pendiente	6260.000	359628.479	4616251.731	0.000	697.927	697.927	31.581848	0.000	-0.068	0.00	0.00	697.927	697.813	697.813
RECTA Pendiente	6280.000	359637.999	4616269.320	0.000	697.926	697.926	31.581848	0.000	-0.068	0.00	0.00	697.926	697.594	697.594
RECTA Pendiente	6300.000	359647.518	4616286.909	0.000	697.925	697.925	31.581848	0.000	-0.068	0.00	0.00	697.925	697.668	697.668
RECTA Pendiente	6320.000	359657.038	4616304.498	0.000	697.923	697.923	31.581848	0.000	-0.068	0.00	0.00	697.923	697.526	697.526
RECTA Pendiente	6340.000	359666.558	4616322.087	0.000	697.922	697.922	31.581848	0.000	-0.068	0.00	0.00	697.922	697.708	697.708
RECTA Pendiente	6360.000	359676.078	4616339.676	0.000	697.920	697.920	31.581848	0.000	-0.068	0.00	0.00	697.920	697.704	697.704
RECTA Pendiente	6380.000	359685.597	4616357.265	0.000	697.919	697.919	31.581848	0.000	-0.068	0.00	0.00	697.919	697.785	697.785
RECTA Pendiente	6400.000	359695.117	4616374.854	0.000	697.918	697.918	31.581848	0.000	-0.068	0.00	0.00	697.918	697.527	697.527

Istram 20.08.08.26 11/02/21 10:49:36 200009 pagina 8
PROYECTO : ESTUDIO INFORMATIVO DE LA INTEGRACION DEL FFCC EN VALLADOLID
GRUPO : 9 : EJES ANCHO IB
EJE : 49 : VIA 5 IB - VIA 1 IB

*** PUNTOS DEL EJE EN PLANTA ***

TIPO	P.K.	X	Y	RADIO	Z RAS IZ.	Z RAS DR.	AZIMUT	DIST. EJE	PEN(o/oo)	PERAL_I	PERAL_D	HILO BAJO	ZT (eje)	Z TERR.
RECTA Pendiente	6420.000	359704.637	4616392.443	0.000	697.916	697.916	31.581848	0.000	-0.068	0.00	0.00	697.916	697.788	697.788
RECTA Pendiente	6440.000	359714.157	4616410.032	0.000	697.915	697.915	31.581848	0.000	-0.068	0.00	0.00	697.915	697.412	697.412
RECTA Pendiente	6460.000	359723.676	4616427.621	0.000	697.914	697.914	31.581848	0.000	-0.068	0.00	0.00	697.914	697.526	697.526
RECTA Pendiente	6480.000	359733.196	4616445.210	0.000	697.912	697.912	31.581848	0.000	-0.068	0.00	0.00	697.912	697.813	697.813
RECTA Pendiente	6500.000	359742.716	4616462.799	0.000	697.911	697.911	31.581848	0.000	-0.068	0.00	0.00	697.911	697.575	697.575
RECTA Pendiente	6520.000	359752.236	4616480.388	0.000	697.910	697.910	31.581848	0.000	-0.068	0.00	0.00	697.910	697.972	697.972
RECTA Pendiente	6540.000	359761.755	4616497.977	0.000	697.908	697.908	31.581848	0.000	-0.068	0.00	0.00	697.908	697.400	697.400
RECTA Pendiente	6560.000	359771.275	4616515.566	0.000	697.907	697.907	31.581848	0.000	-0.068	0.00	0.00	697.907	697.548	697.548
RECTA KV 2042614	6580.000	359780.795	4616533.156	0.000	697.906	697.906	31.581848	0.000	-0.064	0.00	0.00	697.906	697.511	697.511
RECTA KV 2042614	6600.000	359790.315	4616550.745	0.000	697.904	697.904	31.581848	0.000	-0.054	0.00	0.00	697.904	697.568	697.568
RECTA KV 2042614	6620.000	359799.834	4616568.334	0.000	697.903	697.903	31.581848	0.000	-0.044	0.00	0.00	697.903	697.407	697.407
RECTA KV 2042614	6640.000	359809.354	4616585.923	0.000	697.903	697.903	31.581848	0.000	-0.034	0.00	0.00	697.903	705.376	705.376
RECTA KV 2042614	6660.000	359818.874	4616603.512	0.000	697.902	697.902	31.581848	0.000	-0.025	0.00	0.00	697.902	705.181	705.181
RECTA KV 2042614	6680.000	359828.394	4616621.101	0.000	697.902	697.902	31.581848	0.000	-0.015	0.00	0.00	697.902	697.614	697.614
RECTA KV 2042614	6700.000	359837.913	4616638.690	0.000	697.901	697.901	31.581848	0.000	-0.005	0.00	0.00	697.901	697.628	697.628
RECTA KV 2042614	6720.000	359847.433	4616656.279	0.000	697.901	697.901	31.581848	0.000	0.005	0.00	0.00	697.901	697.168	697.168
RECTA KV 2042614	6740.000	359856.953	4616673.868	0.000	697.902	697.902	31.581848	0.000	0.014	0.00	0.00	697.902	697.461	697.461
RECTA Rampa	6760.000	359866.473	4616691.457	0.000	697.902	697.902	31.581848	0.000	0.021	0.00	0.00	697.902	697.335	697.335
RECTA Rampa	6780.000	359875.992	4616709.046	0.000	697.902	697.902	31.581848	0.000	0.021	0.00	0.00	697.902	697.482	697.482
RECTA Rampa	6800.000	359885.512	4616726.635	0.000	697.903	697.903	31.581848	0.000	0.021	0.00	0.00	697.903	697.445	697.445
RECTA Rampa	6820.000	359895.032	4616744.224	0.000	697.903	697.903	31.581848	0.000	0.021	0.00	0.00	697.903	697.756	697.756
RECTA Rampa	6840.000	359904.552	4616761.813	0.000	697.904	697.904	31.581848	0.000	0.021	0.00	0.00	697.904	697.633	697.633
RECTA Rampa	6860.000	359914.071	4616779.402	0.000	697.904	697.904	31.581848	0.000	0.021	0.00	0.00	697.904	697.663	697.663
RECTA Rampa	6880.000	359923.591	4616796.991	0.000	697.905	697.905	31.581848	0.000	0.021	0.00	0.00	697.905	697.318	697.318
RECTA Rampa	6900.000	359933.111	4616814.580	0.000	697.905	697.905	31.581848	0.000	0.021	0.00	0.00	697.905	697.671	697.671
RECTA Rampa	6920.000	359942.631	4616832.169	0.000	697.905	697.905	31.581848	0.000	0.021	0.00	0.00	697.905	697.591	697.591
RECTA Rampa	6940.000	359952.150	4616849.758	0.000	697.906	697.906	31.581848	0.000	0.021	0.00	0.00	697.906	697.554	697.554
RECTA Rampa	6960.000	359961.670	4616867.347	0.000	697.906	697.906	31.581848	0.000	0.021	0.00	0.00	697.906	697.274	697.274
RECTA Rampa	6980.000	359971.190	4616884.936	0.000	697.907	697.907	31.581848	0.000	0.021	0.00	0.00	697.907	697.324	697.324
RECTA Rampa	7000.000	359980.710	4616902.525	0.000	697.907	697.907	31.581848	0.000	0.021	0.00	0.00	697.907	697.759	697.759
RECTA Rampa	7020.000	359990.229	4616920.114	0.000	697.907	697.907	31.581848	0.000	0.021	0.00	0.00	697.907	697.357	697.357
CLOT. Rampa	7029.026	359994.526	4616928.052	1000000.000	697.908	697.908	31.581848	0.000	0.021	0.00	0.00	697.908	697.250	697.250
CLOT. Rampa	7040.000	359999.749	4616937.703	1000000.000	697.908	697.908	31.582125	0.000	0.021	0.00	0.00	697.908	697.272	697.272
CIRC. Rampa	7049.026	360004.045	4616945.641	690000.000	697.908	697.908	31.582770	0.000	0.021	0.00	0.00	697.908	697.653	697.653
CIRC. Rampa	7060.000	360009.269	4616955.292	690000.000	697.908	697.908	31.583783	0.000	0.021	0.00	0.00	697.908	697.684	697.684
CIRC. Rampa	7080.000	360018.790	4616972.881	690000.000	697.909	697.909	31.585628	0.000	0.021	0.00	0.00	697.909	697.560	697.560
CIRC. Rampa	7100.000	360028.311	4616990.469	690000.000	697.909	697.909	31.587473	0.000	0.021	0.00	0.00	697.909	697.338	697.338
CIRC. Rampa	7120.000	360037.832	4617008.057	690000.000	697.909	697.909	31.589318	0.000	0.021	0.00	0.00	697.909	697.579	697.579
CIRC. Rampa	7140.000	360047.354	4617025.645	690000.000	697.910	697.910	31.591164	0.000	0.021	0.00	0.00	697.910	697.403	697.403
CIRC. Rampa	7160.000	360056.877	4617043.233	690000.000	697.910	697.910	31.593009	0.000	0.021	0.00	0.00	697.910	697.332	697.332
CLOT. Rampa	7167.166	360060.289	4617049.534	690000.000	697.910	697.910	31.593670	0.000	0.021	0.00	0.00	697.910	697.584	697.584
CLOT. Rampa	7180.000	360066.400	4617060.820	1000000.000	697.911	697.911	31.594474	0.000	0.021	0.00	0.00	697.911	697.408	697.408
RECTA Rampa	7187.166	360069.812	4617067.121	0.000	697.911	697.911	31.594593	0.000	0.021	0.00	0.00	697.911	697.194	697.194
RECTA Rampa	7200.000	360075.923	4617078.407	0.000	697.911	697.911	31.594593	0.000	0.021	0.00	0.00	697.911	697.352	697.352
RECTA Rampa	7220.000	360085.446	4617095.994	0.000	697.912	697.912	31.594593	0.000	0.021	0.00	0.00	697.912	697.216	697.216
RECTA Rampa	7240.000	360094.970	4617113.581	0.000	697.912	697.912	31.594593	0.000	0.021	0.00	0.00	697.912	697.461	697.461
RECTA Rampa	7260.000	360104.493	4617131.168	0.000	697.912	697.912	31.594593	0.000	0.021	0.00	0.00	697.912	697.358	697.358
RECTA Rampa	7280.000	360114.016	4617148.756	0.000	697.913	697.913	31.594593	0.000	0.021	0.00	0.00	697.913	697.159	697.159
RECTA Rampa	7300.000	360123.540	4617166.343	0.000	697.913	697.913	31.594593	0.000	0.021	0.00	0.00	697.913	697.307	697.307
RECTA Rampa	7320.000	360133.063	4617183.930	0.000	697.914	697.914	31.594593	0.000	0.021	0.00	0.00	697.914	697.381	697.381

Istram 20.08.08.26 11/02/21 10:49:36 200009 pagina 9
PROYECTO : ESTUDIO INFORMATIVO DE LA INTEGRACION DEL FFCC EN VALLADOLID
GRUPO : 9 : EJES ANCHO IB
EJE : 49 : VIA 5 IB - VIA 1 IB

*** PUNTOS DEL EJE EN PLANTA ***

TIPO	P.K.	X	Y	RADIO	Z RAS IZ.	Z RAS DR.	AZIMUT	DIST. EJE	PEN(o/oo)	PERAL_I	PERAL_D	HILO BAJO	ZT (eje)	Z TERR.
RECTA Rampa	7340.000	360142.586	4617201.517	0.000	697.914	697.914	31.594593	0.000	0.021	0.00	0.00	697.914	697.016	697.016
RECTA Rampa	7360.000	360152.109	4617219.104	0.000	697.914	697.914	31.594593	0.000	0.021	0.00	0.00	697.914	697.384	697.384
RECTA Rampa	7380.000	360161.633	4617236.691	0.000	697.915	697.915	31.594593	0.000	0.021	0.00	0.00	697.915	697.484	697.484
RECTA Rampa	7400.000	360171.156	4617254.278	0.000	697.915	697.915	31.594593	0.000	0.021	0.00	0.00	697.915	697.346	697.346
RECTA Rampa	7420.000	360180.679	4617271.866	0.000	697.916	697.916	31.594593	0.000	0.021	0.00	0.00	697.916	697.505	697.505
RECTA Rampa	7440.000	360190.202	4617289.453	0.000	697.916	697.916	31.594593	0.000	0.021	0.00	0.00	697.916	697.369	697.369
RECTA Rampa	7460.000	360199.726	4617307.040	0.000	697.917	697.917	31.594593	0.000	0.021	0.00	0.00	697.917	696.964	696.964
RECTA Rampa	7480.000	360209.249	4617324.627	0.000	697.917	697.917	31.594593	0.000	0.021	0.00	0.00	697.917	697.382	697.382
RECTA Rampa	7500.000	360218.772	4617342.214	0.000	697.917	697.917	31.594593	0.000	0.021	0.00	0.00	697.917	697.458	697.458
RECTA Rampa	7520.000	360228.296	4617359.801	0.000	697.918	697.918	31.594593	0.000	0.021	0.00	0.00	697.918	697.744	697.744
RECTA Rampa	7540.000	360237.819	4617377.388	0.000	697.918	697.918	31.594593	0.000	0.021	0.00	0.00	697.918	697.186	697.186
RECTA Rampa	7560.000	360247.342	4617394.975	0.000	697.919	697.919	31.594593	0.000	0.021	0.00	0.00	697.919	697.207	697.207
RECTA Rampa	7580.000	360256.865	4617412.563	0.000	697.919	697.919	31.594593	0.000	0.021	0.00	0.00	697.919	697.548	697.548
RECTA Rampa	7600.000	360266.389	4617430.150	0.000	697.919	697.919	31.594593	0.000	0.021	0.00	0.00	697.919	697.479	697.479
RECTA Rampa	7620.000	360275.912	4617447.737	0.000	697.920	697.920	31.594593	0.000	0.021	0.00	0.00	697.920	697.131	697.131
RECTA Rampa	7640.000	360285.435	4617465.324	0.000	697.920	697.920	31.594593	0.000	0.021	0.00	0.00	697.920	697.110	697.110
RECTA Rampa	7660.000	360294.958	4617482.911	0.000	697.921	697.921	31.594593	0.000	0.021	0.00	0.00	697.921	697.552	697.552
RECTA Rampa	7680.000	360304.482	4617500.498	0.000	697.921	697.921	31.594593	0.000	0.021	0.00	0.00	697.921	697.784	697.784
RECTA Rampa	7700.000	360314.005	4617518.085	0.000	697.921	697.921	31.594593	0.000	0.021	0.00	0.00	697.921	697.104	697.104
RECTA Rampa	7720.000	360323.528	4617535.673	0.000	697.922	697.922	31.594593	0.000	0.021	0.00	0.00	697.922	697.151	697.151
RECTA Rampa	7740.000	360333.051	4617553.260	0.000	697.922	697.922	31.594593	0.000	0.021	0.00	0.00	697.922	697.291	697.291
RECTA Rampa	7760.000	360342.575	4617570.847	0.000	697.923	697.923	31.594593	0.000	0.021	0.00	0.00	697.923	697.128	697.128
RECTA Rampa	7780.000	360352.098	4617588.434	0.000	697.923	697.923	31.594593	0.000	0.021	0.00	0.00	697.923	697.286	697.286
RECTA Rampa	7800.000	360361.621	4617606.021	0.000	697.924	697.924	31.594593	0.000	0.021	0.00	0.00	697.924	697.516	697.516
RECTA Rampa	7820.000	360371.145	4617623.608	0.000	697.924	697.924	31.594593	0.000	0.021	0.00	0.00	697.924	697.107	697.107
RECTA Rampa	7840.000	360380.668	4617641.195	0.000	697.924	697.924	31.594593	0.000	0.021	0.00	0.00	697.924	697.181	697.181
RECTA Rampa	7860.000	360390.191	4617658.783	0.000	697.925	697.925	31.594593	0.000	0.021	0.00	0.00	697.925	697.545	697.545
RECTA Rampa	7880.000	360399.714	4617676.370	0.000	697.925	697.925	31.594593	0.000	0.021	0.00	0.00	697.925	697.194	697.194
RECTA Rampa	7900.000	360409.238	4617693.957	0.000	697.926	697.926	31.594593	0.000	0.021	0.00	0.00	697.926	697.250	697.250
RECTA Rampa	7920.000	360418.761	4617711.544	0.000	697.926	697.926	31.594593	0.000	0.021	0.00	0.00	697.926	697.404	697.404
RECTA Rampa	7940.000	360428.284	4617729.131	0.000	697.926	697.926	31.594593	0.000	0.021	0.00	0.00	697.926	697.147	697.147
RECTA Rampa	7960.000	360437.807	4617746.718	0.000	697.927	697.927	31.594593	0.000	0.021	0.00	0.00	697.927	697.448	697.448
RECTA Rampa	7980.000	360447.331	4617764.305	0.000	697.927	697.927	31.594593	0.000	0.021	0.00	0.00	697.927	697.429	697.429
RECTA Rampa	8000.000	360456.854	4617781.892	0.000	697.928	697.928	31.594593	0.000	0.021	0.00	0.00	697.928	696.834	696.834
RECTA Rampa	8020.000	360466.377	4617799.480	0.000	697.928	697.928	31.594593	0.000	0.021	0.00	0.00	697.928	697.519	697.519
RECTA Rampa	8040.000	360475.901	4617817.067	0.000	697.929	697.929	31.594593	0.000	0.021	0.00	0.00	697.929	697.222	697.222
RECTA Rampa	8060.000	360485.424	4617834.654	0.000	697.929	697.929	31.594593	0.000	0.021	0.00	0.00	697.929	697.393	697.393
RECTA Rampa	8080.000	360494.947	4617852.241	0.000	697.929	697.929	31.594593	0.000	0.021	0.00	0.00	697.929	701.594	701.594
RECTA Rampa	8100.000	360504.470	4617869.828	0.000	697.930	697.930	31.594593	0.000	0.021	0.00	0.00	697.930	697.725	697.725
RECTA Rampa	8120.000	360513.994	4617887.415	0.000	697.930	697.930	31.594593	0.000	0.021	0.00	0.00	697.930	697.117	697.117
RECTA Rampa	8140.000	360523.517	4617905.002	0.000	697.931	697.931	31.594593	0.000	0.021	0.00	0.00	697.931	697.286	697.286
RECTA Rampa	8160.000	360533.040	4617922.590	0.000	697.931	697.931	31.594593	0.000	0.021	0.00	0.00	697.931	697.437	697.437
RECTA Rampa	8180.000	360542.563	4617940.177	0.000	697.931	697.931	31.594593	0.000	0.021	0.00	0.00	697.931	697.505	697.505
RECTA Rampa	8200.000	360552.087	4617957.764	0.000	697.932	697.932	31.594593	0.000	0.021	0.00	0.00	697.932	697.529	697.529
RECTA KV 84152	8220.000	360561.610	4617975.351	0.000	697.933	697.933	31.594593	0.000	0.095	0.00	0.00	697.933	697.525	697.525
RECTA KV 84152	8240.000	360571.133	4617992.938	0.000	697.937	697.937	31.594593	0.000	0.333	0.00	0.00	697.937	697.337	697.337
CLOT. KV 84152	8241.094	360571.654	4617993.900	1000000.000	697.937	697.937	31.594593	0.000	0.346	0.00	0.00	697.937	697.348	697.348
CLOT. KV 84152	8260.000	360580.685	4618010.510	1851.291	697.946	697.946	31.919657	0.000	0.571	0.00	0.00	697.946	697.411	697.411
CIRC. KV 84152	8276.094	360588.499	4618024.580	1000.000	697.957	697.957	32.708677	0.000	0.762	0.00	0.00	697.957	697.525	697.525
CIRC. KV 84152	8280.000	360590.425	4618027.977	1000.000	697.960	697.960	32.957324	0.000	0.808	0.00	0.00	697.960	697.454	697.454

Istram 20.08.08.26 11/02/21 10:49:37 200009 pagina 10

PROYECTO : ESTUDIO INFORMATIVO DE LA INTEGRACION DEL FFCC EN VALLADOLID
GRUPO : 9 : EJES ANCHO IB
EJE : 49 : VIA 5 IB - VIA 1 IB

* * * PUNTOS DEL EJE EN PLANTA * * *

TIPO	P.K.	X	Y	RADIO	Z RAS IZ.	Z RAS DR.	AZIMUT	DIST. EJE	PEN(o/oo)	PERAL_I	PERAL_D	HILO BAJO	ZT (eje)	Z TERR.
CIRC. KV 84152	8300.000	360600.496	4618045.256	1000.000	697.978	697.978	34.230563	0.000	1.046	0.00	0.00	697.978	697.498	697.498
CIRC. KV 84152	8320.000	360610.910	4618062.331	1000.000	698.001	698.001	35.503803	0.000	1.284	0.00	0.00	698.001	697.400	697.400
CLOT. KV 84152	8331.265	360616.925	4618071.855	1000.000	698.017	698.017	36.220928	0.000	1.418	0.00	0.00	698.017	697.239	697.239
CLOT. KV 84152	8340.000	360621.661	4618079.195	1332.593	698.030	698.030	36.707644	0.000	1.521	0.00	0.00	698.030	697.106	697.106
CLOT. KV 84152	8360.000	360632.658	4618095.900	5586.962	698.062	698.062	37.299321	0.000	1.759	0.00	0.00	698.062	697.519	697.519
CLOT. KV 84152	8366.265	360636.124	4618101.119	-1000000.000	698.074	698.074	37.335013	0.000	1.833	0.00	0.00	698.074	697.322	697.322
CLOT. KV 84152	8380.000	360643.715	4618112.566	-2548.158	698.100	698.100	37.163433	0.000	1.997	0.00	0.00	698.100	697.470	697.470
CLOT. Rampa	8400.000	360654.641	4618129.317	-1037.485	698.142	698.142	36.299980	0.000	2.160	0.00	0.00	698.142	697.304	697.304
CIRC. Rampa	8401.265	360655.323	4618130.382	-1000.000	698.145	698.145	36.220928	0.000	2.160	0.00	0.00	698.145	697.297	697.297
CIRC. Rampa	8420.000	360665.268	4618146.260	-1000.000	698.185	698.185	35.028195	0.000	2.160	0.00	0.00	698.185	697.283	697.283
CIRC. Rampa	8440.000	360675.555	4618163.412	-1000.000	698.228	698.228	33.754955	0.000	2.160	0.00	0.00	698.228	697.243	697.243
CLOT. Rampa	8459.917	360685.455	4618180.693	-1000.000	698.271	698.271	32.487021	0.000	2.160	0.00	0.00	698.271	697.430	697.430
CLOT. Rampa	8460.000	360685.496	4618180.765	-1002.387	698.272	698.272	32.481722	0.000	2.160	0.00	0.00	698.272	697.430	697.430
CLOT. Rampa	8480.000	360695.122	4618198.296	-2346.368	698.315	698.315	31.575297	0.000	2.160	0.00	0.00	698.315	697.380	697.380
RECTA Rampa	8494.917	360702.193	4618211.431	0.000	698.347	698.347	31.372936	0.000	2.160	0.00	0.00	698.347	697.675	697.675
RECTA Rampa	8500.000	360704.598	4618215.909	0.000	698.358	698.358	31.372936	0.000	2.160	0.00	0.00	698.358	697.579	697.579
RECTA Rampa	8520.000	360714.060	4618233.529	0.000	698.401	698.401	31.372936	0.000	2.160	0.00	0.00	698.401	697.481	697.481
CLOT. Rampa	8539.950	360723.498	4618251.105	1000000.000	698.444	698.444	31.372936	0.000	2.160	0.00	0.00	698.444	697.569	697.569
CLOT. Rampa	8540.000	360723.522	4618251.149	766319.963	698.444	698.444	31.372938	0.000	2.160	0.00	0.00	698.444	697.569	697.569
CLOT. Rampa	8560.000	360733.015	4618268.753	1920.076	698.488	698.488	31.705329	0.000	2.160	0.00	0.00	698.488	697.233	697.233
CLOT. Rampa	8580.000	360742.690	4618286.257	961.242	698.531	698.531	32.699177	0.000	2.160	0.00	0.00	698.531	697.420	697.420
CIRC. KV -57286	8594.947	360750.148	4618299.210	700.000	698.562	698.562	33.873811	0.000	1.936	0.00	0.00	698.562	697.445	697.445
CIRC. KV -57286	8600.000	360752.727	4618303.555	700.000	698.571	698.571	34.333371	0.000	1.848	0.00	0.00	698.571	697.333	697.333
CIRC. KV -57286	8618.803	360762.599	4618319.558	700.000	698.603	698.603	36.043423	0.000	1.519	0.00	0.00	698.603	697.703	697.703

Istram 20.08.08.26 11/02/21 10:46:13 200009 pagina 1

PROYECTO : ESTUDIO INFORMATIVO DE LA INTEGRACION DEL FFCC EN VALLADOLID
GRUPO : 9 : EJES ANCHO IB
EJE : 50 : VIA 1 IB - VIA 4 IB

* * * PUNTOS DEL EJE EN PLANTA * * *

TIPO	P.K.	X	Y	RADIO	Z RAS IZ.	Z RAS DR.	AZIMUT	DIST. EJE	PEN(o/oo)	PERAL_I	PERAL_D	HILO BAJO	ZT (eje)	Z TERR.
RECTA KV 130000	244217.757	354447.172	4607541.789	0.000	691.848	691.848	20.406167	0.000	-4.600	0.00	0.00	691.848	691.913	691.913
RECTA KV 130000	244220.000	354447.879	4607543.917	0.000	691.838	691.838	20.406167	0.000	-4.583	0.00	0.00	691.838	691.922	691.922
RECTA KV 130000	244240.000	354454.180	4607562.899	0.000	691.748	691.748	20.406167	0.000	-4.429	0.00	0.00	691.748	691.732	691.732
RECTA KV 130000	244260.000	354460.482	4607581.880	0.000	691.661	691.661	20.406167	0.000	-4.275	0.00	0.00	691.661	691.735	691.735
CIRC. KV 130000	244278.920	354466.443	4607599.836	649996.133	691.582	691.582	20.406167	0.000	-4.129	0.00	0.00	691.582	691.654	691.654
CIRC. KV 130000	244280.000	354466.784	4607600.861	649996.133	691.577	691.577	20.406273	0.000	-4.121	0.00	0.00	691.577	691.656	691.656
CIRC. KV 130000	244300.000	354473.085	4607619.842	649996.133	691.496	691.496	20.408231	0.000	-3.967	0.00	0.00	691.496	691.274	691.274
CIRC. KV 130000	244320.000	354479.388	4607638.823	649996.133	691.418	691.418	20.410190	0.000	-3.813	0.00	0.00	691.418	691.414	691.414
CIRC. KV 130000	244340.000	354485.691	4607657.804	649996.133	691.344	691.344	20.412149	0.000	-3.659	0.00	0.00	691.344	691.380	691.380
RECTA KV 130000	244359.874	354491.955	4607676.665	0.000	691.272	691.272	20.414096	0.000	-3.507	0.00	0.00	691.272	691.267	691.267
RECTA KV 130000	244360.000	354491.995	4607676.785	0.000	691.272	691.272	20.414096	0.000	-3.506	0.00	0.00	691.272	691.265	691.265
RECTA KV 130000	244380.000	354498.299	4607695.765	0.000	691.203	691.203	20.414096	0.000	-3.352	0.00	0.00	691.203	691.193	691.193
RECTA KV 130000	244400.000	354504.603	4607714.746	0.000	691.138	691.138	20.414096	0.000	-3.198	0.00	0.00	691.138	691.224	691.224
RECTA KV 130000	244420.000	354510.906	4607733.726	0.000	691.076	691.076	20.414096	0.000	-3.044	0.00	0.00	691.076	691.106	691.106
RECTA KV 130000	244440.000	354517.210	4607752.707	0.000	691.016	691.016	20.414096	0.000	-2.890	0.00	0.00	691.016	691.027	691.027
RECTA KV 130000	244460.000	354523.514	4607771.688	0.000	690.960	690.960	20.414096	0.000	-2.736	0.00	0.00	690.960	690.894	690.894
RECTA KV 130000	244480.000	354529.818	4607790.668	0.000	690.907	690.907	20.414096	0.000	-2.583	0.00	0.00	690.907	690.864	690.864
RECTA KV 130000	244500.000	354536.122	4607809.649	0.000	690.857	690.857	20.414096	0.000	-2.429	0.00	0.00	690.857	690.810	690.810
RECTA KV 130000	244520.000	354542.426	4607828.629	0.000	690.810	690.810	20.414096	0.000	-2.275	0.00	0.00	690.810	690.774	690.774
RECTA KV 130000	244540.000	354548.730	4607847.610	0.000	690.766	690.766	20.414096	0.000	-2.121	0.00	0.00	690.766	690.752	690.752
RECTA KV 130000	244560.000	354555.034	4607866.590	0.000	690.725	690.725	20.414096	0.000	-1.967	0.00	0.00	690.725	690.715	690.715
RECTA KV 130000	244580.000	354561.338	4607885.571	0.000	690.687	690.687	20.414096	0.000	-1.813	0.00	0.00	690.687	690.657	690.657
RECTA KV 130000	244600.000	354567.642	4607904.551	0.000	690.652	690.652	20.414096	0.000	-1.659	0.00	0.00	690.652	690.583	690.583
RECTA KV 130000	244620.000	354573.946	4607923.532	0.000	690.621	690.621	20.414096	0.000	-1.506	0.00	0.00	690.621	690.537	690.537
RECTA KV 130000	244640.000	354580.250	4607942.512	0.000	690.592	690.592	20.414096	0.000	-1.352	0.00	0.00	690.592	690.520	690.520
RECTA KV 130000	244660.000	354586.554	4607961.493	0.000	690.566	690.566	20.414096	0.000	-1.198	0.00	0.00	690.566	690.502	690.502
RECTA KV 130000	244680.000	354592.858	4607980.473	0.000	690.544	690.544	20.414096	0.000	-1.044	0.00	0.00	690.544	690.501	690.501
RECTA KV 130000	244700.000	354599.162	4607999.454	0.000	690.525	690.525	20.414096	0.000	-0.890	0.00	0.00	690.525	690.416	690.416
RECTA KV 130000	244720.000	354605.465	4608018.434	0.000	690.508	690.508	20.414096	0.000	-0.736	0.00	0.00	690.508	690.491	690.491
RECTA Pendiente	244740.000	354611.769	4608037.415	0.000	690.494	690.494	20.414096	0.000	-0.734	0.00	0.00	690.494	690.515	690.515
RECTA Pendiente	244760.000	354618.073	4608056.395	0.000	690.479	690.479	20.414096	0.000	-0.734	0.00	0.00	690.479	690.508	690.508
RECTA Pendiente	244780.000	354624.377	4608075.376	0.000	690.464	690.464	20.414096	0.000	-0.734	0.00	0.00	690.464	690.435	690.435
RECTA Pendiente	244800.000	354630.681	4608094.357	0.000	690.450	690.450	20.414096	0.000	-0.734	0.00	0.00	690.450	690.438	690.438
RECTA Pendiente	244820.000	354636.985	4608113.337	0.000	690.435	690.435	20.414096	0.000	-0.734	0.00	0.00	690.435	690.427	690.427
RECTA Pendiente	244840.000	354643.289	4608132.318	0.000	690.420	690.420	20.414096	0.000	-0.734	0.00	0.00	690.420	690.459	690.459
RECTA Pendiente	244860.000	354649.593	4608151.298	0.000	690.406	690.406	20.414096	0.000	-0.734	0.00	0.00	690.406	690.401	690.401
RECTA Pendiente	244880.000	354655.897	4608170.279	0.000	690.391	690.391	20.414096	0.000	-0.734	0.00	0.00	690.391	690.353	690.353
CIRC. Pendiente	244883.462	354656.988	4608173.564	-330003.867	690.388	690.388	20.414096	0.000	-0.734	0.00	0.00	690.388	690.353	690.353
CIRC. Pendiente	244900.000	354662.200	4608189.259	-330003.867	690.376	690.376	20.410905	0.000	-0.734	0.00	0.00	690.376	690.393	690.393
CIRC. Pendiente	244920.000	354668.503	4608208.240	-330003.867	690.362	690.362	20.407047	0.000	-0.734	0.00	0.00	690.362	690.320	690.320
CIRC. Pendiente	244940.000	354674.804	4608227.222	-330003.867	690.347	690.347	20.403189	0.000	-0.734	0.00	0.00	690.347	690.340	690.340
CIRC. Pendiente	244960.000	354681.104	4608246.204	-330003.867	690.332	690.332	20.399330	0.000	-0.734	0.00	0.00	690.332	690.351	690.351
CIRC. Pendiente	244967.248	354683.387	4608253.083	499996.133	690.327	690.327	20.397932	0.000	-0.734	0.00	0.00	690.327	690.313	690.313
CIRC. Pendiente	244980.000	354687.404	4608265.186	499996.133	690.318	690.318	20.399556	0.000	-0.734	0.00	0.00	690.318	690.365	690.365
CIRC. Pendiente	245000.000	354693.704	4608284.167	499996.133	690.303	690.303	20.402102	0.000	-0.734	0.00	0.00	690.303	690.303	690.303
CIRC. Pendiente	245020.000	354700.004	4608303.149	499996.133	690.288	690.288	20.404649	0.000	-0.734	0.00	0.00	690.288	690.292	690.292
CIRC. Pendiente	245040.000	354706.306	4608322.130	499996.133	690.274	690.274	20.407195	0.000	-0.734	0.00	0.00	690.274	690.265	690.265
CIRC. Pendiente	245060.000	354712.608	4608341.111	499996.133	690.259	690.259	20.409742	0.000	-0.734	0.00	0.00	690.259	690.250	690.250
CIRC. Pendiente	245080.000	354718.911	4608360.092	499996.133	690.244	690.244	20.412288	0.000	-0.734	0.00	0.00	690.244	690.230	690.230
CIRC. Pendiente	245100.000	354725.215	4608379.073	499996.133	690.230	690.230	20.414835	0.000	-0.734	0.00	0.00	690.230	690.237	690.237

Istram 20.08.08.26 11/02/21 10:46:13 200009 pagina 2
PROYECTO : ESTUDIO INFORMATIVO DE LA INTEGRACION DEL FFCC EN VALLADOLID
GRUPO : 9 : EJES ANCHO IB
EJE : 50 : VIA 1 IB - VIA 4 IB

*** PUNTOS DEL EJE EN PLANTA ***

TIPO	P.K.	X	Y	RADIO	Z RAS IZ.	Z RAS DR.	AZIMUT	DIST. EJE	PEN(o/oo)	PERAL_I	PERAL_D	HILO BAJO	ZT (eje)	Z TERR.
RECTA Pendiente	245110.864	354728.639	4608389.383	0.000	690.222	690.222	20.416218	0.000	-0.734	0.00	0.00	690.222	690.213	690.213
RECTA Pendiente	245120.000	354731.519	4608398.053	0.000	690.215	690.215	20.416218	0.000	-0.734	0.00	0.00	690.215	690.227	690.227
RECTA Pendiente	245140.000	354737.824	4608417.034	0.000	690.200	690.200	20.416218	0.000	-0.734	0.00	0.00	690.200	690.246	690.246
RECTA Pendiente	245160.000	354744.128	4608436.014	0.000	690.185	690.185	20.416218	0.000	-0.734	0.00	0.00	690.185	690.188	690.188
RECTA Pendiente	245180.000	354750.433	4608454.994	0.000	690.171	690.171	20.416218	0.000	-0.734	0.00	0.00	690.171	689.964	689.964
RECTA Pendiente	245200.000	354756.738	4608473.974	0.000	690.156	690.156	20.416218	0.000	-0.734	0.00	0.00	690.156	689.954	689.954
RECTA Pendiente	245220.000	354763.042	4608492.955	0.000	690.141	690.141	20.416218	0.000	-0.734	0.00	0.00	690.141	689.933	689.933
RECTA Pendiente	245240.000	354769.347	4608511.935	0.000	690.127	690.127	20.416218	0.000	-0.734	0.00	0.00	690.127	690.049	690.049
RECTA Pendiente	245260.000	354775.651	4608530.915	0.000	690.112	690.112	20.416218	0.000	-0.734	0.00	0.00	690.112	689.918	689.918
RECTA Pendiente	245280.000	354781.956	4608549.896	0.000	690.097	690.097	20.416218	0.000	-0.734	0.00	0.00	690.097	689.918	689.918
RECTA Pendiente	245300.000	354788.260	4608568.876	0.000	690.083	690.083	20.416218	0.000	-0.734	0.00	0.00	690.083	690.023	690.023
RECTA Pendiente	245320.000	354794.565	4608587.856	0.000	690.068	690.068	20.416218	0.000	-0.734	0.00	0.00	690.068	689.956	689.956
RECTA Pendiente	245340.000	354800.870	4608606.837	0.000	690.053	690.053	20.416218	0.000	-0.734	0.00	0.00	690.053	689.939	689.939
RECTA Pendiente	245360.000	354807.174	4608625.817	0.000	690.039	690.039	20.416218	0.000	-0.734	0.00	0.00	690.039	689.937	689.937
RECTA Pendiente	245380.000	354813.479	4608644.797	0.000	690.024	690.024	20.416218	0.000	-0.734	0.00	0.00	690.024	689.927	689.927
RECTA Pendiente	245400.000	354819.783	4608663.778	0.000	690.009	690.009	20.416218	0.000	-0.734	0.00	0.00	690.009	689.913	689.913
CIRC. Pendiente	245406.096	354821.705	4608669.563	-500003.867	690.005	690.005	20.416218	0.000	-0.734	0.00	0.00	690.005	689.833	689.833
CIRC. Pendiente	245420.000	354826.088	4608682.758	-500003.867	689.995	689.995	20.414448	0.000	-0.734	0.00	0.00	689.995	689.878	689.878
CIRC. Pendiente	245440.000	354832.391	4608701.739	-500003.867	689.980	689.980	20.411901	0.000	-0.734	0.00	0.00	689.980	689.877	689.877
CIRC. Pendiente	245460.000	354838.694	4608720.720	-500003.867	689.965	689.965	20.409355	0.000	-0.734	0.00	0.00	689.965	689.841	689.841
CIRC. Pendiente	245480.000	354844.996	4608739.701	-500003.867	689.951	689.951	20.406808	0.000	-0.734	0.00	0.00	689.951	689.841	689.841
CIRC. Pendiente	245500.000	354851.298	4608758.682	-500003.867	689.936	689.936	20.404262	0.000	-0.734	0.00	0.00	689.936	689.881	689.881
CIRC. Pendiente	245520.000	354857.598	4608777.664	-500003.867	689.921	689.921	20.401715	0.000	-0.734	0.00	0.00	689.921	689.823	689.823
CIRC. Pendiente	245540.000	354863.898	4608796.646	-500003.867	689.907	689.907	20.399169	0.000	-0.734	0.00	0.00	689.907	689.811	689.811
CIRC. Pendiente	245560.000	354870.197	4608815.628	-500003.867	689.892	689.892	20.396622	0.000	-0.734	0.00	0.00	689.892	689.777	689.777
RECTA Pendiente	245564.592	354871.644	4608819.986	0.000	689.888	689.888	20.396038	0.000	-0.734	0.00	0.00	689.888	689.811	689.811
RECTA Pendiente	245580.000	354876.496	4608834.610	0.000	689.877	689.877	20.396038	0.000	-0.734	0.00	0.00	689.877	689.788	689.788
RECTA Pendiente	245600.000	354882.794	4608853.592	0.000	689.862	689.862	20.396038	0.000	-0.734	0.00	0.00	689.862	689.837	689.837
RECTA Pendiente	245620.000	354889.093	4608872.575	0.000	689.848	689.848	20.396038	0.000	-0.734	0.00	0.00	689.848	689.756	689.756
RECTA KV 247395	245640.000	354895.391	4608891.557	0.000	689.833	689.833	20.396038	0.000	-0.726	0.00	0.00	689.833	689.742	689.742
RECTA KV 247395	245660.000	354901.690	4608910.539	0.000	689.819	689.819	20.396038	0.000	-0.645	0.00	0.00	689.819	689.857	689.857
RECTA KV 247395	245680.000	354907.989	4608929.522	0.000	689.807	689.807	20.396038	0.000	-0.564	0.00	0.00	689.807	689.742	689.742
RECTA KV 247395	245700.000	354914.287	4608948.504	0.000	689.797	689.797	20.396038	0.000	-0.483	0.00	0.00	689.797	689.769	689.769
RECTA KV 247395	245720.000	354920.586	4608967.486	0.000	689.788	689.788	20.396038	0.000	-0.402	0.00	0.00	689.788	689.703	689.703
RECTA KV 247395	245740.000	354926.884	4608986.468	0.000	689.781	689.781	20.396038	0.000	-0.321	0.00	0.00	689.781	689.768	689.768
RECTA KV 247395	245760.000	354933.183	4609005.451	0.000	689.775	689.775	20.396038	0.000	-0.241	0.00	0.00	689.775	689.745	689.745
RECTA KV 247395	245780.000	354939.481	4609024.433	0.000	689.771	689.771	20.396038	0.000	-0.160	0.00	0.00	689.771	689.733	689.733
RECTA KV 247395	245800.000	354945.780	4609043.415	0.000	689.769	689.769	20.396038	0.000	-0.079	0.00	0.00	689.769	689.770	689.770
RECTA KV 247395	245820.000	354952.078	4609062.398	0.000	689.768	689.768	20.396038	0.000	0.002	0.00	0.00	689.768	689.830	689.830
RECTA KV 247395	245840.000	354958.377	4609081.380	0.000	689.769	689.769	20.396038	0.000	0.083	0.00	0.00	689.769	689.787	689.787
RECTA Rampa	245860.000	354964.676	4609100.362	0.000	689.771	689.771	20.396038	0.000	0.088	0.00	0.00	689.771	689.802	689.802
RECTA Rampa	245880.000	354970.974	4609119.345	0.000	689.772	689.772	20.396038	0.000	0.088	0.00	0.00	689.772	689.722	689.722
RECTA Rampa	245900.000	354977.273	4609138.327	0.000	689.774	689.774	20.396038	0.000	0.088	0.00	0.00	689.774	689.721	689.721
RECTA Rampa	245920.000	354983.571	4609157.309	0.000	689.776	689.776	20.396038	0.000	0.088	0.00	0.00	689.776	689.739	689.739
RECTA Rampa	245940.000	354989.870	4609176.292	0.000	689.778	689.778	20.396038	0.000	0.088	0.00	0.00	689.778	689.760	689.760
CIRC. Rampa	245940.832	354990.132	4609177.081	-150003.867	689.778	689.778	20.396038	0.000	0.088	0.00	0.00	689.778	699.273	699.273
CIRC. Rampa	245960.000	354996.167	4609195.274	-150003.867	689.779	689.779	20.387903	0.000	0.088	0.00	0.00	689.779	689.723	689.723
CIRC. Rampa	245980.000	355002.462	4609214.258	-150003.867	689.781	689.781	20.379415	0.000	0.088	0.00	0.00	689.781	689.730	689.730
CIRC. Rampa	246000.000	355008.754	4609233.242	-150003.867	689.783	689.783	20.370927	0.000	0.088	0.00	0.00	689.783	689.724	689.724
CIRC. Rampa	246020.000	355015.044	4609252.227	-150003.867	689.785	689.785	20.362438	0.000	0.088	0.00	0.00	689.785	689.722	689.722

Istram 20.08.08.26 11/02/21 10:46:13 200009 pagina 3
PROYECTO : ESTUDIO INFORMATIVO DE LA INTEGRACION DEL FFCC EN VALLADOLID
GRUPO : 9 : EJES ANCHO IB
EJE : 50 : VIA 1 IB - VIA 4 IB

*** PUNTOS DEL EJE EN PLANTA ***

TIPO	P.K.	X	Y	RADIO	Z RAS IZ.	Z RAS DR.	AZIMUT	DIST. EJE	PEN(o/oo)	PERAL_I	PERAL_D	HILO BAJO	ZT (eje)	Z TERR.
CIRC. Rampa	246030.631	355018.387	4609262.320	149996.133	689.786	689.786	20.357926	0.000	0.088	0.00	0.00	689.786	689.644	689.644
CIRC. Rampa	246040.000	355021.332	4609271.213	149996.133	689.786	689.786	20.361903	0.000	0.088	0.00	0.00	689.786	689.727	689.727
CIRC. Rampa	246060.000	355027.622	4609290.199	149996.133	689.788	689.788	20.370391	0.000	0.088	0.00	0.00	689.788	689.779	689.779
CIRC. Rampa	246080.000	355033.914	4609309.183	149996.133	689.790	689.790	20.378880	0.000	0.088	0.00	0.00	689.790	689.777	689.777
CIRC. Rampa	246100.000	355040.208	4609328.167	149996.133	689.792	689.792	20.387368	0.000	0.088	0.00	0.00	689.792	689.773	689.773
CIRC. Rampa	246120.000	355046.506	4609347.149	149996.133	689.793	689.793	20.395857	0.000	0.088	0.00	0.00	689.793	689.839	689.839
RECTA Rampa	246125.666	355048.290	4609352.527	0.000	689.794	689.794	20.398261	0.000	0.088	0.00	0.00	689.794	689.780	689.780
RECTA Rampa	246140.000	355052.805	4609366.131	0.000	689.795	689.795	20.398261	0.000	0.088	0.00	0.00	689.795	689.806	689.806
RECTA Rampa	246160.000	355059.104	4609385.114	0.000	689.797	689.797	20.398261	0.000	0.088	0.00	0.00	689.797	689.766	689.766
RECTA Rampa	246180.000	355065.403	4609404.096	0.000	689.799	689.799	20.398261	0.000	0.088	0.00	0.00	689.799	689.665	689.665
RECTA Rampa	246200.000	355071.702	4609423.078	0.000	689.800	689.800	20.398261	0.000	0.088	0.00	0.00	689.800	689.652	689.652
RECTA Rampa	246220.000	355078.002	4609442.060	0.000	689.802	689.802	20.398261	0.000	0.088	0.00	0.00	689.802	689.751	689.751
RECTA Rampa	246240.000	355084.301	4609461.042	0.000	689.804	689.804	20.398261	0.000	0.088	0.00	0.00	689.804	689.763	689.763
RECTA Rampa	246260.000	355090.600	4609480.024	0.000	689.806	689.806	20.398261	0.000	0.088	0.00	0.00	689.806	689.719	689.719
RECTA Rampa	246280.000	355096.899	4609499.006	0.000	689.807	689.807	20.398261	0.000	0.088	0.00	0.00	689.807	689.727	689.727
RECTA Rampa	246300.000	355103.198	4609517.988	0.000	689.809	689.809	20.398261	0.000	0.088	0.00	0.00	689.809	689.758	689.758
RECTA Rampa	246320.000	355109.498	4609536.970	0.000	689.811	689.811	20.398261	0.000	0.088	0.00	0.00	689.811	689.722	689.722
RECTA Rampa	246340.000	355115.797	4609555.952	0.000	689.813	689.813	20.398261	0.000	0.088	0.00	0.00	689.813	689.710	689.710
RECTA Rampa	246360.000	355122.096	4609574.935	0.000	689.814	689.814	20.398261	0.000	0.088	0.00	0.00	689.814	689.624	689.624
RECTA Rampa	246380.000	355128.395	4609593.917	0.000	689.816	689.816	20.398261	0.000	0.088	0.00	0.00	689.816	689.542	689.542
RECTA Rampa	246400.000	355134.694	4609612.899	0.000	689.818	689.818	20.398261	0.000	0.088	0.00	0.00	689.818	689.532	689.532
RECTA Rampa	246420.000	355140.994	4609631.881	0.000	689.820	689.820	20.398261	0.000	0.088	0.00	0.00	689.820	689.591	689.591
RECTA Rampa	246440.000	355147.293	4609650.863	0.000	689.821	689.821	20.398261	0.000	0.088	0.00	0.00	689.821	689.625	689.625
RECTA KV 227008	246460.000	355153.592	4609669.845	0.000	689.823	689.823	20.398261	0.000	0.098	0.00	0.00	689.823	689.644	689.644
RECTA KV 227008	246480.000	355159.891	4609688.827	0.000	689.826	689.826	20.398261	0.000	0.186	0.00	0.00	689.826	689.609	689.609
RECTA KV 227008	246500.000	355166.191	4609707.809	0.000	689.831	689.831	20.398261	0.000	0.274	0.00	0.00	689.831	689.591	689.591
RECTA KV 227008	246520.000	355172.490	4609726.791	0.000	689.837	689.837	20.398261	0.000	0.363	0.00	0.00	689.837	689.627	689.627
RECTA KV 227008	246540.000	355178.789	4609745.773	0.000	689.845	689.845	20.398261	0.000	0.451	0.00	0.00	689.845	689.651	689.651
RECTA KV 227008	246560.000	355185.088	4609764.755	0.000	689.855	689.855	20.398261	0.000	0.539	0.00	0.00	689.855	689.670	689.670
RECTA KV 227008	246580.000	355191.387	4609783.738	0.000	689.867	689.867	20.398261	0.000	0.627	0.00	0.00	689.867	689.668	689.668
RECTA KV 227008	246600.000	355197.687	4609802.720	0.000	689.880	689.880	20.398261	0.000	0.715	0.00	0.00	689.880	689.652	689.652
RECTA Rampa	246620.000	355203.986	4609821.702	0.000	689.895	689.895	20.398261	0.000	0.792	0.00	0.00	689.895	689.698	689.698
RECTA Rampa	246640.000	355210.285	4609840.684	0.000	689.911	689.911	20.398261	0.000	0.792	0.00	0.00	689.911	689.715	689.715
RECTA Rampa	246660.000	355216.584	4609859.666	0.000	689.927	689.927	20.398261	0.000	0.792	0.00	0.00	689.927	689.760	689.760
RECTA Rampa	246680.000	355222.883	4609878.648	0.000	689.943	689.943	20.398261	0.000	0.792	0.00	0.00	689.943	689.746	689.746
RECTA Rampa	246700.000	355229.183	4609897.630	0.000	689.959	689.959	20.398261	0.000	0.792	0.00	0.00	689.959	689.758	689.758
RECTA Rampa	246720.000	355235.482	4609916.612	0.000	689.975	689.975	20.398261	0.000	0.792	0.00	0.00	689.975	689.777	689.777
RECTA Rampa	246740.000	355241.781	4609935.594	0.000	689.990	689.990	20.398261	0.000	0.792	0.00	0.00	689.990	689.828	689.828
CIRC. Rampa	246742.053	355242.428	4609937.543	-300003.867	689.992	689.992	20.398261	0.000	0.792	0.00	0.00	689.992	689.828	689.828
CIRC. Rampa	246760.000	355248.080	4609954.577	-300003.867	690.006	690.006	20.394453	0.000	0.792	0.00	0.00	690.006	689.821	689.821
CIRC. Rampa	246780.000	355254.377	4609973.559	-300003.867	690.022	690.022	20.390209	0.000	0.792	0.00	0.00	690.022	689.827	689.827
CIRC. Rampa	246800.000	355260.673	4609992.542	-300003.867	690.038	690.038	20.385965	0.000	0.792	0.00	0.00	690.038	689.859	689.859
CIRC. Rampa	246820.000	355266.968	4610011.526	-300003.867	690.054	690.054	20.381721	0.000	0.792	0.00	0.00	690.054	689.886	689.886
CIRC. Rampa	246820.741	355267.202	4610012.230	369996.133	690.054	690.054	20.381563	0.000	0.792	0.00	0.00	690.054	690.061	690.061
CIRC. Rampa	246840.000	355273.263	4610030.510	369996.133	690.070	690.070	20.384877	0.000	0.792	0.00	0.00	690.070	696.963	696.963
CIRC. Rampa	246860.000	355279.559	4610049.493	369996.133	690.085	690.085	20.388318	0.000	0.792	0.00	0.00	690.085	690.025	690.025
RECTA Rampa	246876.139	355284.640	4610064.811	0.000	690.098	690.098	20.391095	0.000	0.792	0.00	0.00	690.098	689.932	689.932
RECTA Rampa	246880.000	355285.856	4610068.476	0.000	690.101	690.101	20.391095	0.000	0.792	0.00	0.00	690.101	689.936	689.936
RECTA Rampa	246900.000	355292.153	4610087.458	0.000	690.117	690.117	20.391095	0.000	0.792	0.00	0.00	690.117	689.920	689.920
RECTA Rampa	246920.000	355298.450	4610106.441	0.000	690.133	690.133	20.391095	0.000	0.792	0.00	0.00	690.133	689.975	689.975

Istram 20.08.08.26 11/02/21 10:46:13 200009 pagina 4
PROYECTO : ESTUDIO INFORMATIVO DE LA INTEGRACION DEL FFCC EN VALLADOLID
GRUPO : 9 : EJES ANCHO IB
EJE : 50 : VIA 1 IB - VIA 4 IB

*** PUNTOS DEL EJE EN PLANTA ***

TIPO	P.K.	X	Y	RADIO	Z RAS IZ.	Z RAS DR.	AZIMUT	DIST. EJE	PEN(o/oo)	PERAL_I	PERAL_D	HILO BAJO	ZT (eje)	Z TERR.
RECTA Rampa	246940.000	355304.747	4610125.424	0.000	690.149	690.149	20.391095	0.000	0.792	0.00	0.00	690.149	689.946	689.946
RECTA Rampa	246960.000	355311.044	4610144.407	0.000	690.165	690.165	20.391095	0.000	0.792	0.00	0.00	690.165	689.975	689.975
RECTA Rampa	246980.000	355317.341	4610163.390	0.000	690.180	690.180	20.391095	0.000	0.792	0.00	0.00	690.180	690.023	690.023
RECTA Rampa	247000.000	355323.638	4610182.372	0.000	690.196	690.196	20.391095	0.000	0.792	0.00	0.00	690.196	690.061	690.061
RECTA Rampa	247020.000	355329.935	4610201.355	0.000	690.212	690.212	20.391095	0.000	0.792	0.00	0.00	690.212	690.096	690.096
RECTA Rampa	247040.000	355336.232	4610220.338	0.000	690.228	690.228	20.391095	0.000	0.792	0.00	0.00	690.228	690.100	690.100
RECTA Rampa	247060.000	355342.529	4610239.321	0.000	690.244	690.244	20.391095	0.000	0.792	0.00	0.00	690.244	690.117	690.117
RECTA Rampa	247080.000	355348.826	4610258.304	0.000	690.260	690.260	20.391095	0.000	0.792	0.00	0.00	690.260	690.159	690.159
RECTA Rampa	247100.000	355355.123	4610277.287	0.000	690.276	690.276	20.391095	0.000	0.792	0.00	0.00	690.276	690.195	690.195
RECTA Rampa	247120.000	355361.420	4610296.269	0.000	690.291	690.291	20.391095	0.000	0.792	0.00	0.00	690.291	690.242	690.242
RECTA Rampa	247140.000	355367.718	4610315.252	0.000	690.307	690.307	20.391095	0.000	0.792	0.00	0.00	690.307	690.182	690.182
RECTA Rampa	247160.000	355374.015	4610334.235	0.000	690.323	690.323	20.391095	0.000	0.792	0.00	0.00	690.323	690.133	690.133
RECTA Rampa	247180.000	355380.312	4610353.218	0.000	690.339	690.339	20.391095	0.000	0.792	0.00	0.00	690.339	690.067	690.067
RECTA Rampa	247200.000	355386.609	4610372.201	0.000	690.355	690.355	20.391095	0.000	0.792	0.00	0.00	690.355	690.102	690.102
RECTA Rampa	247220.000	355392.906	4610391.183	0.000	690.371	690.371	20.391095	0.000	0.792	0.00	0.00	690.371	690.126	690.126
RECTA Rampa	247240.000	355399.203	4610410.166	0.000	690.386	690.386	20.391095	0.000	0.792	0.00	0.00	690.386	690.155	690.155
RECTA Rampa	247260.000	355405.500	4610429.149	0.000	690.402	690.402	20.391095	0.000	0.792	0.00	0.00	690.402	690.188	690.188
RECTA Rampa	247280.000	355411.797	4610448.132	0.000	690.418	690.418	20.391095	0.000	0.792	0.00	0.00	690.418	690.317	690.317
RECTA Rampa	247300.000	355418.094	4610467.115	0.000	690.434	690.434	20.391095	0.000	0.792	0.00	0.00	690.434	690.336	690.336
CIRC. Rampa	247302.200	355418.787	4610469.203	99996.133	690.436	690.436	20.391095	0.000	0.792	0.00	0.00	690.436	690.345	690.345
CIRC. Rampa	247320.000	355424.393	4610486.097	99996.133	690.450	690.450	20.402427	0.000	0.792	0.00	0.00	690.450	690.305	690.305
CIRC. Rampa	247340.000	355430.695	4610505.078	99996.133	690.466	690.466	20.415160	0.000	0.792	0.00	0.00	690.466	690.356	690.356
CIRC. Rampa	247360.000	355437.001	4610524.058	99996.133	690.482	690.482	20.427893	0.000	0.792	0.00	0.00	690.482	690.407	690.407
CIRC. Rampa	247380.000	355443.311	4610543.036	99996.133	690.497	690.497	20.440626	0.000	0.792	0.00	0.00	690.497	690.417	690.417
CIRC. Rampa	247384.242	355444.650	4610547.052	-100003.867	690.501	690.501	20.443327	0.000	0.792	0.00	0.00	690.501	690.423	690.423
CIRC. Rampa	247400.000	355449.623	4610562.014	-100003.867	690.513	690.513	20.433296	0.000	0.792	0.00	0.00	690.513	690.440	690.440
CIRC. Rampa	247420.000	355455.930	4610580.994	-100003.867	690.529	690.529	20.420564	0.000	0.792	0.00	0.00	690.529	690.460	690.460
CIRC. Rampa	247440.000	355462.234	4610599.974	-100003.867	690.545	690.545	20.407832	0.000	0.792	0.00	0.00	690.545	690.440	690.440
CIRC. Rampa	247460.000	355468.534	4610618.956	-100003.867	690.561	690.561	20.395100	0.000	0.792	0.00	0.00	690.561	690.388	690.388
RECTA Rampa	247468.960	355471.356	4610627.460	0.000	690.568	690.568	20.389396	0.000	0.792	0.00	0.00	690.568	690.374	690.374
RECTA Rampa	247480.000	355474.831	4610637.939	0.000	690.577	690.577	20.389396	0.000	0.792	0.00	0.00	690.577	690.376	690.376
RECTA Rampa	247500.000	355481.128	4610656.922	0.000	690.592	690.592	20.389396	0.000	0.792	0.00	0.00	690.592	690.395	690.395
RECTA Rampa	247520.000	355487.424	4610675.905	0.000	690.608	690.608	20.389396	0.000	0.792	0.00	0.00	690.608	690.412	690.412
RECTA Rampa	247540.000	355493.721	4610694.888	0.000	690.624	690.624	20.389396	0.000	0.792	0.00	0.00	690.624	690.446	690.446
CIRC. KV 65996	247552.302	355497.594	4610706.564	-40003.867	690.634	690.634	20.389396	0.000	0.796	0.00	0.00	690.634	690.420	690.420
CIRC. KV 65996	247560.000	355500.017	4610713.871	-40003.867	690.640	690.640	20.377146	0.000	0.913	0.00	0.00	690.640	690.408	690.408
CIRC. KV 65996	247580.000	355506.305	4610732.857	-40003.867	690.662	690.662	20.345318	0.000	1.216	0.00	0.00	690.662	690.487	690.487
CIRC. KV 65996	247600.000	355512.584	4610751.845	-40003.867	690.689	690.689	20.313490	0.000	1.519	0.00	0.00	690.689	690.607	690.607
CIRC. KV 65996	247605.839	355514.415	4610757.390	39996.133	690.698	690.698	20.304197	0.000	1.607	0.00	0.00	690.698	690.573	690.573
CIRC. KV 65996	247620.000	355518.858	4610770.836	39996.133	690.722	690.722	20.326737	0.000	1.822	0.00	0.00	690.722	690.581	690.581
CIRC. KV 65996	247640.000	355525.140	4610789.824	39996.133	690.762	690.762	20.358571	0.000	2.125	0.00	0.00	690.762	690.509	690.509
CIRC. KV 65996	247660.000	355531.432	4610808.808	39996.133	690.807	690.807	20.390405	0.000	2.428	0.00	0.00	690.807	690.590	690.590
RECTA KV 65996	247667.700	355533.858	4610816.117	0.000	690.827	690.827	20.402662	0.000	2.545	0.00	0.00	690.827	690.616	690.616
RECTA KV 65996	247680.000	355537.732	4610827.790	0.000	690.859	690.859	20.402662	0.000	2.731	0.00	0.00	690.859	690.708	690.708
RECTA Rampa	247700.000	355544.033	4610846.771	0.000	690.914	690.914	20.402662	0.000	2.762	0.00	0.00	690.914	690.814	690.814
RECTA Rampa	247720.000	355550.333	4610865.753	0.000	690.969	690.969	20.402662	0.000	2.762	0.00	0.00	690.969	690.941	690.941
RECTA Rampa	247740.000	355556.634	4610884.735	0.000	691.025	691.025	20.402662	0.000	2.762	0.00	0.00	691.025	690.960	690.960
RECTA Rampa	247760.000	355562.934	4610903.716	0.000	691.080	691.080	20.402662	0.000	2.762	0.00	0.00	691.080	691.029	691.029
RECTA Rampa	247780.000	355569.235	4610922.698	0.000	691.135	691.135	20.402662	0.000	2.762	0.00	0.00	691.135	691.110	691.110
RECTA KV 64055	247800.000	355575.535	4610941.680	0.000	691.191	691.191	20.402662	0.000	2.915	0.00	0.00	691.191	691.175	691.175

Istram 20.08.08.26 11/02/21 10:46:13 200009 pagina 5
PROYECTO : ESTUDIO INFORMATIVO DE LA INTEGRACION DEL FFCC EN VALLADOLID
GRUPO : 9 : EJES ANCHO IB
EJE : 50 : VIA 1 IB - VIA 4 IB

*** PUNTOS DEL EJE EN PLANTA ***

TIPO	P.K.	X	Y	RADIO	Z RAS IZ.	Z RAS DR.	AZIMUT	DIST. EJE	PEN(o/oo)	PERAL_I	PERAL_D	HILO BAJO	ZT (eje)	Z TERR.
RECTA KV 64055	247820.000	355581.836	4610960.661	0.000	691.253	691.253	20.402662	0.000	3.227	0.00	0.00	691.253	691.182	691.182
CLOT. KV 64055	247825.939	355583.707	4610966.298	1000000.000	691.272	691.272	20.402662	0.000	3.320	0.00	0.00	691.272	691.186	691.186
CLOT. KV 64055	247840.000	355588.142	4610979.641	5589.944	691.320	691.320	20.482728	0.000	3.540	0.00	0.00	691.320	691.219	691.219
CLOT. KV 64055	247860.000	355594.516	4610998.598	2307.603	691.394	691.394	20.872494	0.000	3.852	0.00	0.00	691.394	691.363	691.363
CLOT. Rampa	247880.000	355601.055	4611017.499	1453.895	691.471	691.471	21.586245	0.000	3.855	0.00	0.00	691.471	691.408	691.408
CLOT. Rampa	247900.000	355607.853	4611036.308	1061.273	691.548	691.548	22.623982	0.000	3.855	0.00	0.00	691.548	691.503	691.503
CLOT. Rampa	247920.000	355615.004	4611054.986	835.616	691.625	691.625	23.985704	0.000	3.855	0.00	0.00	691.625	691.573	691.573
CLOT. Rampa	247940.000	355622.599	4611073.487	689.094	691.703	691.703	25.671411	0.000	3.855	0.00	0.00	691.703	691.635	691.635
CLOT. Rampa	247960.000	355630.729	4611091.759	586.291	691.780	691.780	27.681103	0.000	3.855	0.00	0.00	691.780	691.689	691.689
CLOT. KV -45091	247980.000	355639.477	4611109.743	510.179	691.852	691.852	30.014781	0.000	3.419	0.00	0.00	691.852	691.739	691.739
CIRC. KV -45091	247988.939	355643.608	4611117.670	482.200	691.882	691.882	31.162619	0.000	3.220	0.00	0.00	691.882	691.769	691.769
CIRC. KV -45091	248000.000	355648.920	4611127.372	482.200	691.916	691.916	32.622898	0.000	2.975	0.00	0.00	691.916	691.860	691.860
CLOT. KV -45091	248006.719	355652.255	4611133.205	482.200	691.936	691.936	33.509999	0.000	2.826	0.00	0.00	691.936	691.865	691.865
CIRC. KV -45091	248011.719	355654.790	4611137.515	450.000	691.950	691.950	34.193736	0.000	2.715	0.00	0.00	691.950	691.878	691.878
CIRC. KV -45091	248020.000	355659.092	4611144.590	450.000	691.972	691.972	35.365225	0.000	2.532	0.00	0.00	691.972	691.926	691.926
CIRC. KV -45091	248040.000	355670.014	4611161.343	450.000	692.018	692.018	38.194646	0.000	2.088	0.00	0.00	692.018	691.875	691.875
CLOT. KV -45091	248055.768	355679.142	4611174.198	450.000	692.048	692.048	40.425299	0.000	1.738	0.00	0.00	692.048	691.944	691.944
CLOT. KV -45091	248060.000	355681.669	4611177.594	470.067	692.055	692.055	41.011286	0.000	1.645	0.00	0.00	692.055	691.921	691.921
CIRC. KV -45091	248060.768	355682.130	4611178.207	473.900	692.056	692.056	41.114818	0.000	1.627	0.00	0.00	692.056	691.921	691.921
CIRC. Rampa	248080.000	355694.014	4611193.327	473.900	692.085	692.085	43.698433	0.000	1.415	0.00	0.00	692.085	691.936	691.936
CLOT. Rampa	248080.909	355694.591	4611194.029	473.900	692.086	692.086	43.820541	0.000	1.415	0.00	0.00	692.086	691.939	691.939
CLOT. Rampa	248100.000	355707.010	4611208.527	480.863	692.113	692.113	46.366590	0.000	1.415	0.00	0.00	692.113	691.991	691.991
CIRC. Rampa	248100.909	355707.616	4611209.204	481.200	692.114	692.114	46.486888	0.000	1.415	0.00	0.00	692.114	691.996	691.996
CIRC. Rampa	248120.000	355720.629	4611223.171	481.200	692.141	692.141	49.012600	0.000	1.415	0.00	0.00	692.141	692.023	692.023
CIRC. Rampa	248140.000	355734.845	4611237.238	481.200	692.169	692.169	51.658567	0.000	1.415	0.00	0.00	692.169	692.090	692.090
CIRC. KV -24986	248160.000	355749.632	4611250.701	481.200	692.197	692.197	54.304535	0.000	1.270	0.00	0.00	692.197	692.040	692.040
CIRC. KV -24986	248180.000	355764.957	4611263.539	481.200	692.215	692.215	56.950502	0.000	0.470	0.00	0.00	692.215	692.068	692.068
CIRC. KV -24986	248200.000	355780.821	4611275.728	481.200	692.216	692.216	59.596470	0.000	-0.330	0.00	0.00	692.216	692.164	692.164
CIRC. Pendiente	248220.000	355797.168	4611287.248	481.200	692.205	692.205	62.242437	0.000	-0.586	0.00	0.00	692.205	692.100	692.100
CIRC. Pendiente	248240.000	355813.980	4611298.079	481.200	692.194	692.194	64.888405	0.000	-0.586	0.00	0.00	692.194	692.180	692.180
CLOT. Pendiente	248241.921	355815.618	4611299.082	481.200	692.193	692.193	65.142500	0.000	-0.586	0.00	0.00	692.193	692.176	692.176
CLOT. Pendiente	248260.000	355831.230	4611308.198	461.954	692.182	692.182	67.584196	0.000	-0.586	0.00	0.00	692.182	700.009	700.009
CIRC. Pendiente	248261.921	355832.909	4611309.130	460.000	692.181	692.181	67.849440	0.000	-0.586	0.00	0.00	692.181	698.489	698.489
CIRC. KV -113848	248280.000	355848.899	4611317.565	460.000	692.169	692.169	70.351546	0.000	-0.717	0.00	0.00	692.169	692.047	692.047
CIRC. KV -113848	248300.000	355866.959	4611326.155	460.000	692.153	692.153	73.119458	0.000	-0.893	0.00	0.00	692.153	692.026	692.026
CLOT. KV -113848	248306.034	355872.478	4611328.591	460.000	692.148	692.148	73.954489	0.000	-0.946	0.00	0.00	692.148	691.989	691.989
CLOT. Pendiente	248320.000	355885.356	4611333.997	1524.782	692.134	692.134	75.212488	0.000	-1.025	0.00	0.00	692.134	692.005	692.005
RECTA Pendiente	248326.034	355890.941	4611336.280	0.000	692.127	692.127	75.338445	0.000	-1.025	0.00	0.00	692.127	691.995	691.995
RECTA Pendiente	248340.000	355903.872	4611341.556	0.000	692.113	692.113	75.338445	0.000	-1.025	0.00	0.00	692.113	691.964	691.964
CIRC. Pendiente	248354.437	355917.240	4611347.010	250.000	692.098	692.098	75.338445	0.000	-1.025	0.00	0.00	692.098	691.919	691.919
CIRC. KV 224168	248360.000	355922.413	4611349.054	250.000	692.093	692.093	76.754983	0.000	-1.024	0.00	0.00	692.093	691.926	691.926
CIRC. KV 224168	248380.000	355941.360	4611355.441	250.000	692.073	692.073	81.847941	0.000	-0.935	0.00	0.00	692.073	692.002	692.002
CIRC. KV 224168	248392.983	355953.908	4611358.768	-250.000	692.061	692.061	85.154022	0.000	-0.877	0.00	0.00	692.061	691.961	691.961
CIRC. Pendiente	248400.000	355960.712	4611360.485	-250.000	692.055	692.055	83.367145	0.000	-0.847	0.00	0.00	692.055	691.952	691.952
CIRC. Pendiente	248420.000	355979.806	4611366.418	-250.000	692.038	692.038	78.274187	0.000	-0.847	0.00	0.00	692.038	691.885	691.885
RECTA Pendiente	248437.811	355996.363	4611372.972	0.000	692.023	692.023	73.738661	0.000	-0.847	0.00	0.00	692.023	691.866	691.866
RECTA Pendiente	248440.000	355998.369	4611373.849	0.000	692.021	692.021	73.738661	0.000	-0.847	0.00	0.00	692.021	691.859	691.859
RECTA Pendiente	248460.000	356016.691	4611381.867	0.000	692.004	692.004	73.738661	0.000	-0.847	0.00	0.00	692.004	691.882	691.882
RECTA KV -159083	248480.000	356035.013	4611389.886	0.000	691.987	691.987	73.738661	0.000	-0.896	0.00	0.00	691.987	691.910	691.910
RECTA KV -159083	248500.000	356053.336	4611397.904	0.000	691.968	691.968	73.738661	0.000	-1.022	0.00	0.00	691.968	691.831	691.831

Istram 20.08.08.26 11/02/21 10:46:13 200009 pagina 6

PROYECTO : ESTUDIO INFORMATIVO DE LA INTEGRACION DEL FFCC EN VALLADOLID
GRUPO : 9 : EJES ANCHO IB
EJE : 50 : VIA 1 IB - VIA 4 IB

*** PUNTOS DEL EJE EN PLANTA ***

TIPO	P.K.	X	Y	RADIO	Z RAS IZ.	Z RAS DR.	AZIMUT	DIST. EJE	PEN(o/oo)	PERAL_I	PERAL_D	HILO BAJO	ZT (eje)	Z TERR.
RECTA KV -159083	248520.000	356071.658	4611405.922	0.000	691.946	691.946	73.738661	0.000	-1.147	0.00	0.00	691.946	691.869	691.869
RECTA Pendiente	248540.000	356089.980	4611413.940	0.000	691.923	691.923	73.738661	0.000	-1.161	0.00	0.00	691.923	691.740	691.740
RECTA Pendiente	248560.000	356108.303	4611421.959	0.000	691.900	691.900	73.738661	0.000	-1.161	0.00	0.00	691.900	691.742	691.742
RECTA Pendiente	248580.000	356126.625	4611429.977	0.000	691.877	691.877	73.738661	0.000	-1.161	0.00	0.00	691.877	691.754	691.754
RECTA Pendiente	248600.000	356144.947	4611437.995	0.000	691.854	691.854	73.738661	0.000	-1.161	0.00	0.00	691.854	691.734	691.734
RECTA KV 45000	248620.000	356163.270	4611446.013	0.000	691.831	691.831	73.738661	0.000	-1.092	0.00	0.00	691.831	691.714	691.714
RECTA KV 45000	248640.000	356181.592	4611454.032	0.000	691.813	691.813	73.738661	0.000	-0.648	0.00	0.00	691.813	691.694	691.694
RECTA KV 45000	248660.000	356199.914	4611462.050	0.000	691.805	691.805	73.738661	0.000	-0.203	0.00	0.00	691.805	691.672	691.672
RECTA KV 45000	248680.000	356218.237	4611470.068	0.000	691.805	691.805	73.738661	0.000	0.241	0.00	0.00	691.805	691.703	691.703
CIRC. KV 45000	248687.179	356224.813	4611472.946	-1185.000	691.807	691.807	73.738661	0.000	0.401	0.00	0.00	691.807	691.711	691.711
CIRC. Rampa	248700.000	356236.531	4611478.150	-1185.000	691.813	691.813	73.049860	0.000	0.408	0.00	0.00	691.813	691.702	691.702
CIRC. Rampa	248720.000	356254.695	4611486.519	-1185.000	691.821	691.821	71.975397	0.000	0.408	0.00	0.00	691.821	691.693	691.693
RECTA Rampa	248722.540	356256.992	4611487.604	0.000	691.822	691.822	71.838938	0.000	0.408	0.00	0.00	691.822	691.690	691.690
RECTA Rampa	248740.000	356272.771	4611495.078	0.000	691.829	691.829	71.838938	0.000	0.408	0.00	0.00	691.829	691.675	691.675
RECTA Rampa	248760.000	356290.846	4611503.640	0.000	691.837	691.837	71.838938	0.000	0.408	0.00	0.00	691.837	691.683	691.683
RECTA Rampa	248780.000	356308.921	4611512.201	0.000	691.845	691.845	71.838938	0.000	0.408	0.00	0.00	691.845	691.744	691.744
CIRC. Rampa	248787.371	356315.583	4611515.356	1900.000	691.848	691.848	71.838938	0.000	0.408	0.00	0.00	691.848	691.733	691.733
CIRC. Rampa	248800.000	356327.014	4611520.724	1900.000	691.853	691.853	72.262090	0.000	0.408	0.00	0.00	691.853	691.715	691.715
CIRC. KV 33518	248820.000	356345.189	4611529.070	1900.000	691.866	691.866	72.932216	0.000	0.899	0.00	0.00	691.866	691.746	691.746
CIRC. KV 33518	248840.000	356363.452	4611537.223	1900.000	691.889	691.889	73.602342	0.000	1.495	0.00	0.00	691.889	691.731	691.731
RECTA Rampa	248856.934	356378.981	4611543.976	0.000	691.919	691.919	74.169725	0.000	1.900	0.00	0.00	691.919	691.801	691.801
RECTA Rampa	248860.000	356381.798	4611545.187	0.000	691.925	691.925	74.169725	0.000	1.900	0.00	0.00	691.925	691.785	691.785
RECTA Rampa	248880.000	356400.174	4611553.081	0.000	691.963	691.963	74.169725	0.000	1.900	0.00	0.00	691.963	691.825	691.825
RECTA Rampa	248900.000	356418.550	4611560.975	0.000	692.001	692.001	74.169725	0.000	1.900	0.00	0.00	692.001	691.921	691.921
RECTA KV -124955	248920.000	356436.927	4611568.869	0.000	692.038	692.038	74.169725	0.000	1.775	0.00	0.00	692.038	691.883	691.883
RECTA KV -124955	248940.000	356455.303	4611576.763	0.000	692.072	692.072	74.169725	0.000	1.615	0.00	0.00	692.072	692.010	692.010
CLOT. KV -124955	248940.469	356455.734	4611576.948	-1000000.000	692.072	692.072	74.169725	0.000	1.611	0.00	0.00	692.072	692.010	692.010
CLOT. Rampa	248960.000	356473.638	4611584.751	-614.419	692.102	692.102	73.157906	0.000	1.500	0.00	0.00	692.102	691.965	691.965
CIRC. Rampa	248960.469	356474.066	4611584.944	-600.000	692.103	692.103	73.108692	0.000	1.500	0.00	0.00	692.103	691.967	691.967
CIRC. Rampa	248980.000	356491.747	4611593.239	-600.000	692.132	692.132	71.036425	0.000	1.500	0.00	0.00	692.132	691.811	691.811
CLOT. Rampa	248989.504	356500.250	4611597.483	-600.000	692.147	692.147	70.028009	0.000	1.500	0.00	0.00	692.147	692.024	692.024
CLOT. Rampa	249000.000	356509.570	4611602.311	-1262.614	692.162	692.162	69.206578	0.000	1.500	0.00	0.00	692.162	691.811	691.811
RECTA Rampa	249009.504	356517.972	4611606.752	0.000	692.177	692.177	68.966976	0.000	1.500	0.00	0.00	692.177	691.932	691.932
RECTA Rampa	249020.000	356527.246	4611611.668	0.000	692.192	692.192	68.966976	0.000	1.500	0.00	0.00	692.192	691.623	691.623
CLOT. Rampa	249039.030	356544.060	4611620.582	1000000.000	692.221	692.221	68.966976	0.000	1.500	0.00	0.00	692.221	691.994	691.994
CLOT. Rampa	249040.000	356544.916	4611621.036	14437.970	692.222	692.222	68.969114	0.000	1.500	0.00	0.00	692.222	691.993	691.993
CIRC. Rampa	249059.030	356561.774	4611629.865	700.000	692.251	692.251	69.876433	0.000	1.500	0.00	0.00	692.251	692.106	692.106
CIRC. Rampa	249060.000	356562.638	4611630.306	700.000	692.252	692.252	69.964620	0.000	1.500	0.00	0.00	692.252	692.115	692.115
CIRC. Rampa	249080.000	356580.580	4611639.140	700.000	692.282	692.282	71.783533	0.000	1.500	0.00	0.00	692.282	692.132	692.132
CLOT. Rampa	249095.206	356594.386	4611645.512	700.000	692.305	692.305	73.166441	0.000	1.500	0.00	0.00	692.305	692.146	692.146
CLOT. Rampa	249100.000	356598.767	4611647.459	920.698	692.312	692.312	73.550190	0.000	1.500	0.00	0.00	692.312	692.153	692.153
RECTA KV -35521	249115.206	356612.713	4611653.520	0.000	692.333	692.333	74.075898	0.000	1.147	0.00	0.00	692.333	692.131	692.131
RECTA KV -35521	249120.000	356617.115	4611655.419	0.000	692.338	692.338	74.075898	0.000	1.012	0.00	0.00	692.338	692.094	692.094
RECTA Rampa	249140.000	356635.480	4611663.340	0.000	692.354	692.354	74.075898	0.000	0.655	0.00	0.00	692.354	692.098	692.098
RECTA Rampa	249160.000	356653.844	4611671.261	0.000	692.367	692.367	74.075898	0.000	0.655	0.00	0.00	692.367	692.195	692.195
RECTA Rampa	249180.000	356672.209	4611679.182	0.000	692.380	692.380	74.075898	0.000	0.655	0.00	0.00	692.380	692.279	692.279
RECTA KV -55816	249200.000	356690.573	4611687.103	0.000	692.391	692.391	74.075898	0.000	0.361	0.00	0.00	692.391	692.240	692.240
RECTA Rampa	249220.000	356708.938	4611695.024	0.000	692.395	692.395	74.075898	0.000	0.118	0.00	0.00	692.395	692.281	692.281
RECTA Rampa	249240.000	356727.302	4611702.945	0.000	692.397	692.397	74.075898	0.000	0.118	0.00	0.00	692.397	692.290	692.290
RECTA KV 14762	249260.000	356745.667	4611710.866	0.000	692.404	692.404	74.075898	0.000	0.890	0.00	0.00	692.404	692.321	692.321

Istram 20.08.08.26 11/02/21 10:46:13 200009 pagina 7

PROYECTO : ESTUDIO INFORMATIVO DE LA INTEGRACION DEL FFCC EN VALLADOLID
GRUPO : 9 : EJES ANCHO IB
EJE : 50 : VIA 1 IB - VIA 4 IB

*** PUNTOS DEL EJE EN PLANTA ***

TIPO	P.K.	X	Y	RADIO	Z RAS IZ.	Z RAS DR.	AZIMUT	DIST. EJE	PEN(o/oo)	PERAL_I	PERAL_D	HILO BAJO	ZT (eje)	Z TERR.
RECTA Rampa	249280.000	356764.031	4611718.787	0.000	692.435	692.435	74.075898	0.000	2.150	0.00	0.00	692.435	692.354	692.354
CLOT. Rampa	249288.183	356771.545	4611722.028	1000000.000	692.453	692.453	74.075898	0.000	2.150	0.00	0.00	692.453	692.347	692.347
CIRC. Rampa	249298.183	356780.741	4611725.958	500.000	692.474	692.474	74.712517	0.000	2.150	0.00	0.00	692.474	692.342	692.342
CIRC. Rampa	249300.000	356782.417	4611726.658	500.000	692.478	692.478	74.943849	0.000	2.150	0.00	0.00	692.478	692.342	692.342
CIRC. KV -119289	249320.000	356801.037	4611733.957	500.000	692.521	692.521	77.490328	0.000	2.108	0.00	0.00	692.521	692.340	692.340
CLOT. KV -119289	249333.711	356813.963	4611738.527	500.000	692.549	692.549	79.236116	0.000	1.993	0.00	0.00	692.549	692.341	692.341
CLOT. KV -119289	249340.000	356819.930	4611740.513	1347.206	692.561	692.561	79.785045	0.000	1.940	0.00	0.00	692.561	692.341	692.341
RECTA KV -119289	249343.711	356823.457	4611741.668	0.000	692.568	692.568	79.872735	0.000	1.909	0.00	0.00	692.568	692.343	692.343
CIRC. Rampa	249355.651	356834.805	4611745.381	-326.859	692.591	692.591	79.872735	0.000	1.899	0.00	0.00	692.591	692.361	692.361
CIRC. Rampa	249360.000	356838.930	4611746.760	-326.859	692.599	692.599	79.025695	0.000	1.899	0.00	0.00	692.599	692.373	692.373
CIRC. Rampa	249380.000	356857.644	4611753.806	-326.859	692.637	692.637	75.130319	0.000	1.899	0.00	0.00	692.637	692.383	692.383
CIRC. Rampa	249384.989	356862.243	4611755.741	-326.859	692.647	692.647	74.158617	0.000	1.899	0.00	0.00	692.647	692.416	692.416

Istram 20.08.08.26 11/02/21 10:45:10 200009 pagina 1
PROYECTO : ESTUDIO INFORMATIVO DE LA INTEGRACION DEL FFCC EN VALLADOLID
GRUPO : 9 : EJES ANCHO IB
EJE : 63 : VIA 2 IB - VIA 7 IB

*** PUNTOS DEL EJE EN PLANTA ***

TIPO	P.K.	X	Y	RADIO	Z RAS IZ.	Z RAS DR.	AZIMUT	DIST. EJE	PEN(o/oo)	PERAL_I	PERAL_D	HILO BAJO	ZT (eje)	Z TERR.
RECTA Rampa	0.000	355533.575	4610799.392	0.000	690.611	690.611	20.402700	0.000	3.323	0.00	0.00	690.611	690.480	690.480
RECTA Rampa	20.000	355539.876	4610818.374	0.000	690.678	690.678	20.402700	0.000	3.323	0.00	0.00	690.678	690.507	690.507
RECTA Rampa	40.000	355546.176	4610837.355	0.000	690.744	690.744	20.402700	0.000	3.323	0.00	0.00	690.744	690.673	690.673
RECTA Rampa	60.000	355552.477	4610856.337	0.000	690.811	690.811	20.402700	0.000	3.323	0.00	0.00	690.811	690.896	690.896
RECTA KV 8093	80.000	355558.777	4610875.319	0.000	690.879	690.879	20.402700	0.000	3.965	0.00	0.00	690.879	690.930	690.930
CIRC. KV 8093	81.864	355559.364	4610877.087	12500.000	690.886	690.886	20.402700	0.000	4.196	0.00	0.00	690.886	690.934	690.934
CIRC. Rampa	100.000	355565.090	4610894.296	12500.000	690.981	690.981	20.495067	0.000	5.797	0.00	0.00	690.981	691.003	691.003
CIRC. Rampa	107.790	355567.557	4610901.685	-12500.000	691.026	691.026	20.534739	0.000	5.797	0.00	0.00	691.026	691.038	691.038
CIRC. KV -6293	120.000	355571.422	4610913.267	-12500.000	691.095	691.095	20.472552	0.000	5.100	0.00	0.00	691.095	691.089	691.089
RECTA KV -6293	133.692	355575.742	4610926.260	0.000	691.150	691.150	20.402821	0.000	2.925	0.00	0.00	691.150	691.088	691.088
RECTA Rampa	140.000	355577.730	4610932.247	0.000	691.168	691.168	20.402821	0.000	2.758	0.00	0.00	691.168	691.016	691.016
RECTA Rampa	160.000	355584.030	4610951.228	0.000	691.223	691.223	20.402821	0.000	2.758	0.00	0.00	691.223	691.229	691.229
RECTA Rampa	180.000	355590.331	4610970.210	0.000	691.278	691.278	20.402821	0.000	2.758	0.00	0.00	691.278	691.209	691.209
CIRC. Rampa	182.986	355591.272	4610973.044	-400.000	691.286	691.286	20.402821	0.000	2.758	0.00	0.00	691.286	691.220	691.220
CIRC. KV -7900	200.000	355596.287	4610989.301	-400.000	691.323	691.323	17.694923	0.000	1.116	0.00	0.00	691.323	691.307	691.307
CIRC. KV -7900	203.172	355597.145	4610992.355	300.000	691.326	691.326	17.190054	0.000	0.714	0.00	0.00	691.326	691.323	691.323
CIRC. Pendiente	220.000	355602.086	4611008.438	300.000	691.320	691.320	20.761026	0.000	-1.043	0.00	0.00	691.320	691.323	691.323
RECTA Pendiente	235.395	355607.390	4611022.889	0.000	691.304	691.304	24.027948	0.000	-1.043	0.00	0.00	691.304	691.281	691.281
RECTA Pendiente	240.000	355609.087	4611027.170	0.000	691.299	691.299	24.027948	0.000	-1.043	0.00	0.00	691.299	691.276	691.276
RECTA Pendiente	260.000	355616.458	4611045.762	0.000	691.279	691.279	24.027948	0.000	-1.043	0.00	0.00	691.279	691.265	691.265
CIRC. KV 3400	271.425	355620.668	4611056.383	300.000	691.267	691.267	24.027948	0.000	-0.994	0.00	0.00	691.267	691.255	691.255
CIRC. KV 3400	280.000	355623.942	4611064.308	300.000	691.269	691.269	25.847605	0.000	1.528	0.00	0.00	691.269	691.250	691.250
RECTA KV 3400	286.292	355626.487	4611070.052	0.000	691.284	691.284	27.182714	0.000	3.378	0.00	0.00	691.284	691.251	691.251
RECTA Rampa	300.000	355632.164	4611082.539	0.000	691.338	691.338	27.182714	0.000	3.934	0.00	0.00	691.338	691.250	691.250
RECTA Rampa	320.000	355640.447	4611100.744	0.000	691.416	691.416	27.182714	0.000	3.934	0.00	0.00	691.416	691.229	691.229
CIRC. KV -30003	324.489	355642.306	4611104.829	330.000	691.434	691.434	27.182714	0.000	3.931	0.00	0.00	691.434	691.243	691.243
CIRC. KV -30003	340.000	355649.059	4611118.792	330.000	691.491	691.491	30.175073	0.000	3.414	0.00	0.00	691.491	691.363	691.363
CLOT. KV -30003	351.857	355654.659	4611129.243	330.000	691.529	691.529	32.462560	0.000	3.019	0.00	0.00	691.529	691.533	691.533
CLOT. Rampa	360.000	355658.719	4611136.301	348.101	691.553	691.553	33.992534	0.000	2.778	0.00	0.00	691.553	691.624	691.624
CLOT. Rampa	380.000	355669.365	4611153.229	402.303	691.608	691.608	37.403810	0.000	2.778	0.00	0.00	691.608	691.611	691.611
CLOT. Rampa	400.000	355680.840	4611169.608	476.496	691.664	691.664	40.322294	0.000	2.778	0.00	0.00	691.664	691.594	691.594
CIRC. Rampa	401.857	355681.942	4611171.103	484.800	691.669	691.669	40.568336	0.000	2.778	0.00	0.00	691.669	691.597	691.597
CIRC. KV 139969	420.000	355693.007	4611185.479	484.800	691.720	691.720	42.950738	0.000	2.847	0.00	0.00	691.720	691.616	691.616
CIRC. KV 139969	440.000	355705.818	4611200.835	484.800	691.778	691.778	45.577057	0.000	2.989	0.00	0.00	691.778	691.690	691.690
CIRC. Rampa	460.000	355719.252	4611215.650	484.800	691.839	691.839	48.203377	0.000	3.077	0.00	0.00	691.839	691.767	691.767
CIRC. Rampa	480.000	355733.285	4611229.898	484.800	691.901	691.901	50.829696	0.000	3.077	0.00	0.00	691.901	691.742	691.742
CIRC. Rampa	500.000	355747.894	4611243.555	484.800	691.962	691.962	53.456015	0.000	3.077	0.00	0.00	691.962	691.834	691.834
CIRC. Rampa	520.000	355763.054	4611256.599	484.800	692.024	692.024	56.082334	0.000	3.077	0.00	0.00	692.024	691.955	691.955
CIRC. KV -22100	540.000	355778.739	4611269.005	484.800	692.084	692.084	58.708653	0.000	2.736	0.00	0.00	692.084	691.995	691.995
CIRC. KV -22100	560.000	355794.922	4611280.755	484.800	692.130	692.130	61.334972	0.000	1.831	0.00	0.00	692.130	691.985	691.985
CLOT. KV -22100	568.651	355802.070	4611285.628	484.800	692.144	692.144	62.470987	0.000	1.440	0.00	0.00	692.144	692.020	692.020
CLOT. KV -22100	580.000	355811.578	4611291.824	456.240	692.157	692.157	64.007937	0.000	0.927	0.00	0.00	692.157	692.135	692.135
CLOT. KV -22100	600.000	355828.703	4611302.152	413.329	692.167	692.167	66.943523	0.000	0.022	0.00	0.00	692.167	694.273	694.273
CIRC. Pendiente	618.651	355845.105	4611311.028	380.000	692.160	692.160	69.942174	0.000	-0.595	0.00	0.00	692.160	692.073	692.073
CIRC. Pendiente	620.000	355846.307	4611311.639	380.000	692.159	692.159	70.168174	0.000	-0.595	0.00	0.00	692.159	692.064	692.064
CIRC. KV -15699	640.000	355864.381	4611320.198	380.000	692.146	692.146	73.518804	0.000	-0.899	0.00	0.00	692.146	692.005	692.005
RECTA KV -15699	644.039	355868.084	4611321.811	0.000	692.142	692.142	74.195533	0.000	-1.156	0.00	0.00	692.142	692.007	692.007
RECTA Pendiente	660.000	355882.751	4611328.105	0.000	692.116	692.116	74.195533	0.000	-1.874	0.00	0.00	692.116	692.023	692.023
RECTA Pendiente	680.000	355901.131	4611335.991	0.000	692.079	692.079	74.195533	0.000	-1.874	0.00	0.00	692.079	692.063	692.063
CIRC. Pendiente	694.324	355914.294	4611341.639	250.000	692.052	692.052	74.195533	0.000	-1.874	0.00	0.00	692.052	691.985	691.985

Istram 20.08.08.26 11/02/21 10:45:10 200009 pagina 2
PROYECTO : ESTUDIO INFORMATIVO DE LA INTEGRACION DEL FFCC EN VALLADOLID
GRUPO : 9 : EJES ANCHO IB
EJE : 63 : VIA 2 IB - VIA 7 IB

*** PUNTOS DEL EJE EN PLANTA ***

TIPO	P.K.	X	Y	RADIO	Z RAS IZ.	Z RAS DR.	AZIMUT	DIST. EJE	PEN(o/oo)	PERAL_I	PERAL_D	HILO BAJO	ZT (eje)	Z TERR.
CIRC. KV 8600	700.000	355919.535	4611343.818	250.000	692.042	692.042	75.641005	0.000	-1.553	0.00	0.00	692.042	691.951	691.951
CIRC. Rampa	720.000	355938.368	4611350.536	250.000	692.034	692.034	80.733964	0.000	0.687	0.00	0.00	692.034	691.980	691.980
CIRC. Rampa	740.000	355957.677	4611355.727	250.000	692.048	692.048	85.826922	0.000	0.687	0.00	0.00	692.048	691.874	691.874
CIRC. Rampa	740.718	355958.378	4611355.884	-400.000	692.048	692.048	86.009843	0.000	0.687	0.00	0.00	692.048	691.871	691.871
CIRC. KV -14799	760.000	355977.087	4611360.540	-400.000	692.059	692.059	82.941070	0.000	0.107	0.00	0.00	692.059	691.869	691.869
RECTA KV -14799	776.825	355993.213	4611365.334	0.000	692.051	692.051	80.263349	0.000	-1.030	0.00	0.00	692.051	691.917	691.917
RECTA KV -14799	780.000	355996.237	4611366.303	0.000	692.048	692.048	80.263349	0.000	-1.244	0.00	0.00	692.048	691.923	691.923
RECTA Pendiente	800.000	356015.283	4611372.404	0.000	692.021	692.021	80.263349	0.000	-1.347	0.00	0.00	692.021	691.856	691.856
RECTA Pendiente	820.000	356034.330	4611378.506	0.000	691.994	691.994	80.263349	0.000	-1.347	0.00	0.00	691.994	691.859	691.859
RECTA Pendiente	840.000	356053.376	4611384.608	0.000	691.967	691.967	80.263349	0.000	-1.347	0.00	0.00	691.967	691.844	691.844
RECTA Pendiente	860.000	356072.423	4611390.709	0.000	691.940	691.940	80.263349	0.000	-1.347	0.00	0.00	691.940	691.834	691.834
CIRC. Pendiente	864.792	356076.986	4611392.171	-400.000	691.934	691.934	80.263349	0.000	-1.347	0.00	0.00	691.934	691.843	691.843
CIRC. KV 29715	880.000	356091.378	4611397.085	-400.000	691.913	691.913	77.842874	0.000	-1.317	0.00	0.00	691.913	691.829	691.829
CIRC. KV 29715	900.000	356110.000	4611404.373	-400.000	691.893	691.893	74.659775	0.000	-0.644	0.00	0.00	691.893	691.837	691.837
RECTA Pendiente	905.511	356115.066	4611406.544	0.000	691.890	691.890	73.782613	0.000	-0.506	0.00	0.00	691.890	691.823	691.823
RECTA Pendiente	920.000	356128.343	4611412.344	0.000	691.883	691.883	73.782613	0.000	-0.506	0.00	0.00	691.883	691.787	691.787
RECTA Pendiente	940.000	356146.671	4611420.349	0.000	691.873	691.873	73.782613	0.000	-0.506	0.00	0.00	691.873	691.764	691.764
RECTA Pendiente	960.000	356164.999	4611428.355	0.000	691.863	691.863	73.782613	0.000	-0.506	0.00	0.00	691.863	691.773	691.773
RECTA Pendiente	980.000	356183.327	4611436.361	0.000	691.853	691.853	73.782613	0.000	-0.506	0.00	0.00	691.853	691.781	691.781
RECTA Pendiente	1000.000	356201.655	4611444.366	0.000	691.843	691.843	73.782613	0.000	-0.506	0.00	0.00	691.843	691.790	691.790
RECTA Pendiente	1020.000	356219.982	4611452.372	0.000	691.833	691.833	73.782613	0.000	-0.506	0.00	0.00	691.833	691.798	691.798
RECTA Pendiente	1040.000	356238.310	4611460.377	0.000	691.822	691.822	73.782613	0.000	-0.506	0.00	0.00	691.822	691.807	691.807
RECTA Pendiente	1060.000	356256.638	4611468.383	0.000	691.812	691.812	73.782613	0.000	-0.506	0.00	0.00	691.812	691.815	691.815
RECTA Pendiente	1080.000	356274.966	4611476.389	0.000	691.802	691.802	73.782613	0.000	-0.506	0.00	0.00	691.802	691.824	691.824
RECTA Pendiente	1100.000	356293.294	4611484.394	0.000	691.792	691.792	73.782613	0.000	-0.506	0.00	0.00	691.792	691.832	691.832
RECTA KV 8830	1120.000	356311.622	4611492.400	0.000	691.794	691.794	73.782613	0.000	1.164	0.00	0.00	691.794	691.841	691.841
RECTA Rampa	1140.000	356329.950	4611500.405	0.000	691.835	691.835	73.782613	0.000	2.325	0.00	0.00	691.835	691.849	691.849
RECTA Rampa	1160.000	356348.277	4611508.411	0.000	691.881	691.881	73.782613	0.000	2.325	0.00	0.00	691.881	691.862	691.862
RECTA Rampa	1180.000	356366.605	4611516.417	0.000	691.928	691.928	73.782613	0.000	2.325	0.00	0.00	691.928	691.885	691.885
RECTA Rampa	1200.000	356384.933	4611524.422	0.000	691.974	691.974	73.782613	0.000	2.325	0.00	0.00	691.974	691.902	691.902
RECTA KV -19519	1220.000	356403.261	4611532.428	0.000	692.020	692.020	73.782613	0.000	2.090	0.00	0.00	692.020	691.932	691.932
CIRC. KV -19519	1223.326	356406.309	4611533.759	-750.000	692.027	692.027	73.782613	0.000	1.919	0.00	0.00	692.027	691.935	691.935
CIRC. KV -19519	1240.000	356421.513	4611540.603	-750.000	692.052	692.052	72.367321	0.000	1.065	0.00	0.00	692.052	691.946	691.946
CIRC. Rampa	1260.000	356439.545	4611549.255	-750.000	692.073	692.073	70.669669	0.000	1.046	0.00	0.00	692.073	691.950	691.950
CIRC. Rampa	1280.000	356457.338	4611558.384	-750.000	692.094	692.094	68.972016	0.000	1.046	0.00	0.00	692.094	691.966	691.966
RECTA Rampa	1281.055	356458.270	4611558.879	0.000	692.095	692.095	68.882447	0.000	1.046	0.00	0.00	692.095	691.969	691.969
RECTA Rampa	1300.000	356474.997	4611567.775	0.000	692.115	692.115	68.882447	0.000	1.046	0.00	0.00	692.115	691.995	691.995
RECTA Rampa	1320.000	356492.655	4611577.166	0.000	692.136	692.136	68.882447	0.000	1.046	0.00	0.00	692.136	691.979	691.979
RECTA Rampa	1340.000	356510.313	4611586.557	0.000	692.156	692.156	68.882447	0.000	1.046	0.00	0.00	692.156	692.079	692.079
RECTA Rampa	1360.000	356527.971	4611595.948	0.000	692.177	692.177	68.882447	0.000	1.046	0.00	0.00	692.177	692.090	692.090
RECTA Rampa	1380.000	356545.629	4611605.340	0.000	692.198	692.198	68.882447	0.000	1.046	0.00	0.00	692.198	692.100	692.100
RECTA Rampa	1400.000	356563.287	4611614.731	0.000	692.219	692.219	68.882447	0.000	1.046	0.00	0.00	692.219	692.107	692.107
RECTA Rampa	1420.000	356580.945	4611624.122	0.000	692.240	692.240	68.882447	0.000	1.046	0.00	0.00	692.240	692.116	692.116
RECTA Rampa	1440.000	356598.603	4611633.513	0.000	692.261	692.261	68.882447	0.000	1.046	0.00	0.00	692.261	692.127	692.127
RECTA Rampa	1460.000	356616.261	4611642.905	0.000	692.282	692.282	68.882447	0.000	1.046	0.00	0.00	692.282	692.134	692.134
RECTA Rampa	1480.000	356633.919	4611652.296	0.000	692.303	692.303	68.882447	0.000	1.046	0.00	0.00	692.303	692.157	692.157
CIRC. Rampa	1488.232	356641.187	4611656.161	-700.000	692.311	692.311	68.882447	0.000	1.046	0.00	0.00	692.311	692.148	692.148
CIRC. Rampa	1500.000	356651.530	4611661.774	-700.000	692.324	692.324	67.812170	0.000	1.046	0.00	0.00	692.324	692.146	692.146
RECTA Rampa	1506.910	356657.558	4611665.150	0.000	692.331	692.331	67.183776	0.000	1.046	0.00	0.00	692.331	692.185	692.185
RECTA Rampa	1509.112	356659.474	4611666.236	0.000	692.333	692.333	67.183776	0.000	1.046	0.00	0.00	692.333	692.191	692.191

PUNTOS DEL EJE CADA 20 M ANCHO 1.435 MM

Istram 20.08.08.26 11/02/21 09:46:31 200009 pagina 1
PROYECTO : ESTUDIO INFORMATIVO DE LA INTEGRACION DEL FFCC EN VALLADOLID
GRUPO : 1 : ALTERNATIVA 1
EJE : 1 : VIA 1 UIC

* * * PUNTOS DEL EJE EN PLANTA * * *

TIPO	P.K.	X	Y	RADIO	Z RAS IZ.	Z RAS DR.	AZIMUT	DIST. EJE	PEN(o/oo)	PERAL_I	PERAL_D	HILO BAJO	ZT (eje)	Z TERR.
RECTA KV 130000	174874.848	354443.502	4607543.007	0.000	691.848	691.848	20.406167	0.000	-4.600	0.00	0.00	691.848	691.925	691.925
RECTA KV 130000	174880.000	354445.125	4607547.897	0.000	691.825	691.825	20.406167	0.000	-4.560	0.00	0.00	691.825	691.856	691.856
RECTA KV 130000	174900.000	354451.427	4607566.878	0.000	691.735	691.735	20.406167	0.000	-4.406	0.00	0.00	691.735	691.770	691.770
RECTA KV 130000	174920.000	354457.729	4607585.859	0.000	691.649	691.649	20.406167	0.000	-4.252	0.00	0.00	691.649	691.726	691.726
CIRC. KV 130000	174936.011	354462.773	4607601.055	650000.000	691.582	691.582	20.406167	0.000	-4.129	0.00	0.00	691.582	691.589	691.589
CIRC. KV 130000	174940.000	354464.030	4607604.840	650000.000	691.565	691.565	20.406558	0.000	-4.099	0.00	0.00	691.565	691.564	691.564
CIRC. KV 130000	174960.000	354470.332	4607623.822	650000.000	691.485	691.485	20.408516	0.000	-3.945	0.00	0.00	691.485	691.491	691.491
CIRC. KV 130000	174980.000	354476.635	4607642.803	650000.000	691.407	691.407	20.410475	0.000	-3.791	0.00	0.00	691.407	691.410	691.410
CIRC. KV 130000	175000.000	354482.938	4607661.783	650000.000	691.333	691.333	20.412434	0.000	-3.637	0.00	0.00	691.333	691.323	691.323
RECTA KV 130000	175016.965	354488.285	4607677.884	0.000	691.272	691.272	20.414096	0.000	-3.507	0.00	0.00	691.272	691.215	691.215
RECTA KV 130000	175020.000	354489.242	4607680.764	0.000	691.262	691.262	20.414096	0.000	-3.483	0.00	0.00	691.262	691.177	691.177
RECTA KV 130000	175040.000	354495.545	4607699.745	0.000	691.194	691.194	20.414096	0.000	-3.329	0.00	0.00	691.194	691.179	691.179
RECTA KV 130000	175060.000	354501.849	4607718.725	0.000	691.129	691.129	20.414096	0.000	-3.176	0.00	0.00	691.129	691.059	691.059
RECTA KV 130000	175080.000	354508.153	4607737.706	0.000	691.067	691.067	20.414096	0.000	-3.022	0.00	0.00	691.067	691.076	691.076
RECTA KV 130000	175100.000	354514.457	4607756.686	0.000	691.008	691.008	20.414096	0.000	-2.868	0.00	0.00	691.008	690.952	690.952
RECTA KV 130000	175120.000	354520.761	4607775.667	0.000	690.952	690.952	20.414096	0.000	-2.714	0.00	0.00	690.952	690.878	690.878
RECTA KV 130000	175140.000	354527.065	4607794.647	0.000	690.899	690.899	20.414096	0.000	-2.560	0.00	0.00	690.899	690.908	690.908
RECTA KV 130000	175160.000	354533.369	4607813.628	0.000	690.850	690.850	20.414096	0.000	-2.406	0.00	0.00	690.850	690.781	690.781
RECTA KV 130000	175180.000	354539.673	4607832.608	0.000	690.803	690.803	20.414096	0.000	-2.252	0.00	0.00	690.803	690.737	690.737
RECTA KV 130000	175200.000	354545.977	4607851.589	0.000	690.759	690.759	20.414096	0.000	-2.099	0.00	0.00	690.759	690.710	690.710
RECTA KV 130000	175220.000	354552.281	4607870.569	0.000	690.719	690.719	20.414096	0.000	-1.945	0.00	0.00	690.719	690.709	690.709
RECTA KV 130000	175240.000	354558.585	4607889.550	0.000	690.682	690.682	20.414096	0.000	-1.791	0.00	0.00	690.682	690.600	690.600
RECTA KV 130000	175260.000	354564.889	4607908.530	0.000	690.647	690.647	20.414096	0.000	-1.637	0.00	0.00	690.647	690.586	690.586
RECTA KV 130000	175280.000	354571.193	4607927.511	0.000	690.616	690.616	20.414096	0.000	-1.483	0.00	0.00	690.616	690.582	690.582
RECTA KV 130000	175300.000	354577.497	4607946.491	0.000	690.588	690.588	20.414096	0.000	-1.329	0.00	0.00	690.588	690.475	690.475
RECTA KV 130000	175320.000	354583.801	4607965.472	0.000	690.563	690.563	20.414096	0.000	-1.176	0.00	0.00	690.563	690.456	690.456
RECTA KV 130000	175340.000	354590.104	4607984.452	0.000	690.541	690.541	20.414096	0.000	-1.022	0.00	0.00	690.541	690.530	690.530
RECTA KV 130000	175360.000	354596.408	4608003.433	0.000	690.522	690.522	20.414096	0.000	-0.868	0.00	0.00	690.522	690.421	690.421
RECTA Pendiente	175380.000	354602.712	4608022.414	0.000	690.506	690.506	20.414096	0.000	-0.734	0.00	0.00	690.506	690.508	690.508
RECTA Pendiente	175400.000	354609.016	4608041.394	0.000	690.492	690.492	20.414096	0.000	-0.734	0.00	0.00	690.492	690.444	690.444
RECTA Pendiente	175420.000	354615.320	4608060.375	0.000	690.477	690.477	20.414096	0.000	-0.734	0.00	0.00	690.477	690.507	690.507
RECTA Pendiente	175440.000	354621.624	4608079.355	0.000	690.462	690.462	20.414096	0.000	-0.734	0.00	0.00	690.462	690.424	690.424
RECTA Pendiente	175460.000	354627.928	4608098.336	0.000	690.448	690.448	20.414096	0.000	-0.734	0.00	0.00	690.448	690.353	690.353
RECTA Pendiente	175480.000	354634.232	4608117.316	0.000	690.433	690.433	20.414096	0.000	-0.734	0.00	0.00	690.433	690.438	690.438
RECTA Pendiente	175500.000	354640.536	4608136.297	0.000	690.418	690.418	20.414096	0.000	-0.734	0.00	0.00	690.418	690.439	690.439
RECTA Pendiente	175520.000	354646.840	4608155.277	0.000	690.404	690.404	20.414096	0.000	-0.734	0.00	0.00	690.404	690.388	690.388
RECTA Pendiente	175540.000	354653.144	4608174.258	0.000	690.389	690.389	20.414096	0.000	-0.734	0.00	0.00	690.389	690.440	690.440
CIRC. Pendiente	175540.553	354653.318	4608174.783	-330000.000	690.388	690.388	20.414096	0.000	-0.734	0.00	0.00	690.388	690.436	690.436
CIRC. Pendiente	175560.000	354659.447	4608193.238	-330000.000	690.374	690.374	20.410344	0.000	-0.734	0.00	0.00	690.374	690.376	690.376
CIRC. Pendiente	175580.000	354665.749	4608212.220	-330000.000	690.360	690.360	20.406486	0.000	-0.734	0.00	0.00	690.360	690.268	690.268
CIRC. Pendiente	175600.000	354672.051	4608231.201	-330000.000	690.345	690.345	20.402627	0.000	-0.734	0.00	0.00	690.345	690.318	690.318
CIRC. Pendiente	175620.000	354678.350	4608250.183	-330000.000	690.330	690.330	20.398769	0.000	-0.734	0.00	0.00	690.330	690.330	690.330
CIRC. Pendiente	175624.339	354679.717	4608254.301	500000.000	690.327	690.327	20.397932	0.000	-0.734	0.00	0.00	690.327	690.345	690.345
CIRC. Pendiente	175640.000	354684.650	4608269.165	500000.000	690.315	690.315	20.399926	0.000	-0.734	0.00	0.00	690.315	690.295	690.295
CIRC. Pendiente	175660.000	354690.950	4608288.147	500000.000	690.301	690.301	20.402473	0.000	-0.734	0.00	0.00	690.301	690.240	690.240
CIRC. Pendiente	175680.000	354697.251	4608307.128	500000.000	690.286	690.286	20.405019	0.000	-0.734	0.00	0.00	690.286	690.219	690.219
CIRC. Pendiente	175700.000	354703.552	4608326.110	500000.000	690.271	690.271	20.407566	0.000	-0.734	0.00	0.00	690.271	690.294	690.294
CIRC. Pendiente	175720.000	354709.855	4608345.091	500000.000	690.257	690.257	20.410112	0.000	-0.734	0.00	0.00	690.257	690.222	690.222
CIRC. Pendiente	175740.000	354716.158	4608364.071	500000.000	690.242	690.242	20.412659	0.000	-0.734	0.00	0.00	690.242	690.229	690.229
CIRC. Pendiente	175760.000	354722.462	4608383.052	500000.000	690.227	690.227	20.415205	0.000	-0.734	0.00	0.00	690.227	690.221	690.221

Istram 20.08.08.26 11/02/21 09:46:31 200009 pagina 2
PROYECTO : ESTUDIO INFORMATIVO DE LA INTEGRACION DEL FFCC EN VALLADOLID
GRUPO : 1 : ALTERNATIVA 1
EJE : 1 : VIA 1 UIC

* * * PUNTOS DEL EJE EN PLANTA * * *

TIPO	P.K.	X	Y	RADIO	Z RAS IZ.	Z RAS DR.	AZIMUT	DIST. EJE	PEN(o/oo)	PERAL_I	PERAL_D	HILO BAJO	ZT (eje)	Z TERR.
RECTA Pendiente	175767.955	354724.969	4608390.602	0.000	690.222	690.222	20.416218	0.000	-0.734	0.00	0.00	690.222	690.199	690.199
RECTA Pendiente	175780.000	354728.766	4608402.032	0.000	690.213	690.213	20.416218	0.000	-0.734	0.00	0.00	690.213	690.170	690.170
RECTA Pendiente	175800.000	354735.071	4608421.013	0.000	690.198	690.198	20.416218	0.000	-0.734	0.00	0.00	690.198	690.154	690.154
RECTA Pendiente	175820.000	354741.375	4608439.993	0.000	690.183	690.183	20.416218	0.000	-0.734	0.00	0.00	690.183	690.023	690.023
RECTA Pendiente	175840.000	354747.680	4608458.973	0.000	690.169	690.169	20.416218	0.000	-0.734	0.00	0.00	690.169	689.986	689.986
RECTA Pendiente	175860.000	354753.985	4608477.954	0.000	690.154	690.154	20.416218	0.000	-0.734	0.00	0.00	690.154	689.982	689.982
RECTA Pendiente	175880.000	354760.289	4608496.934	0.000	690.139	690.139	20.416218	0.000	-0.734	0.00	0.00	690.139	689.968	689.968
RECTA Pendiente	175900.000	354766.594	4608515.914	0.000	690.125	690.125	20.416218	0.000	-0.734	0.00	0.00	690.125	690.001	690.001
RECTA Pendiente	175920.000	354772.898	4608534.895	0.000	690.110	690.110	20.416218	0.000	-0.734	0.00	0.00	690.110	689.946	689.946
RECTA Pendiente	175940.000	354779.203	4608553.875	0.000	690.095	690.095	20.416218	0.000	-0.734	0.00	0.00	690.095	689.877	689.877
RECTA Pendiente	175960.000	354785.507	4608572.855	0.000	690.081	690.081	20.416218	0.000	-0.734	0.00	0.00	690.081	689.771	689.771
RECTA Pendiente	175980.000	354791.812	4608591.835	0.000	690.066	690.066	20.416218	0.000	-0.734	0.00	0.00	690.066	689.880	689.880
RECTA Pendiente	176000.000	354798.116	4608610.816	0.000	690.051	690.051	20.416218	0.000	-0.734	0.00	0.00	690.051	689.872	689.872
RECTA Pendiente	176020.000	354804.421	4608629.796	0.000	690.037	690.037	20.416218	0.000	-0.734	0.00	0.00	690.037	689.782	689.782
RECTA Pendiente	176040.000	354810.726	4608648.776	0.000	690.022	690.022	20.416218	0.000	-0.734	0.00	0.00	690.022	689.762	689.762
RECTA Pendiente	176060.000	354817.030	4608667.757	0.000	690.007	690.007	20.416218	0.000	-0.734	0.00	0.00	690.007	689.759	689.759
CIRC. Pendiente	176063.188	354818.035	4608670.782	-500000.000	690.005	690.005	20.416218	0.000	-0.734	0.00	0.00	690.005	689.759	689.759
CIRC. Pendiente	176080.000	354823.334	4608686.737	-500000.000	689.992	689.992	20.414077	0.000	-0.734	0.00	0.00	689.992	689.857	689.857
CIRC. Pendiente	176100.000	354829.638	4608705.718	-500000.000	689.978	689.978	20.411531	0.000	-0.734	0.00	0.00	689.978	689.771	689.771
CIRC. Pendiente	176120.000	354835.941	4608724.699	-500000.000	689.963	689.963	20.408984	0.000	-0.734	0.00	0.00	689.963	689.790	689.790
CIRC. Pendiente	176140.000	354842.243	4608743.680	-500000.000	689.948	689.948	20.406438	0.000	-0.734	0.00	0.00	689.948	689.860	689.860
CIRC. Pendiente	176160.000	354848.544	4608762.661	-500000.000	689.934	689.934	20.403891	0.000	-0.734	0.00	0.00	689.934	689.873	689.873
CIRC. Pendiente	176180.000	354854.845	4608781.643	-500000.000	689.919	689.919	20.401345	0.000	-0.734	0.00	0.00	689.919	689.949	689.949
CIRC. Pendiente	176200.000	354861.144	4608800.625	-500000.000	689.904	689.904	20.398798	0.000	-0.734	0.00	0.00	689.904	689.792	689.792
CIRC. Pendiente	176220.000	354867.443	4608819.607	-500000.000	689.890	689.890	20.396252	0.000	-0.734	0.00	0.00	689.890	689.823	689.823
RECTA Pendiente	176221.683	354867.973	4608821.204	0.000	689.888	689.888	20.396038	0.000	-0.734	0.00	0.00	689.888	689.813	689.813
RECTA Pendiente	176240.000	354873.742	4608838.589	0.000	689.875	689.875	20.396038	0.000	-0.734	0.00	0.00	689.875	689.895	689.895
RECTA Pendiente	176260.000	354880.040	4608857.572	0.000	689.860	689.860	20.396038	0.000	-0.734	0.00	0.00	689.860	689.852	689.852
RECTA Pendiente	176280.000	354886.339	4608876.554	0.000	689.846	689.846	20.396038	0.000	-0.734	0.00	0.00	689.846	689.749	689.749
RECTA KV 247400	176300.000	354892.638	4608895.536	0.000	689.831	689.831	20.396038	0.000	-0.714	0.00	0.00	689.831	689.810	689.810
RECTA KV 247400	176320.000	354898.936	4608914.519	0.000	689.818	689.818	20.396038	0.000	-0.633	0.00	0.00	689.818	689.843	689.843
RECTA KV 247400	176340.000	354905.235	4608933.501	0.000	689.806	689.806	20.396038	0.000	-0.552	0.00	0.00	689.806	689.742	689.742
RECTA KV 247400	176360.000	354911.533	4608952.483	0.000	689.795	689.795	20.396038	0.000	-0.471	0.00	0.00	689.795	689.787	689.787
RECTA KV 247400	176380.000	354917.832	4608971.466	0.000	689.787	689.787	20.396038	0.000	-0.391	0.00	0.00	689.787	689.842	689.842
RECTA KV 247400	176400.000	354924.130	4608990.448	0.000	689.780	689.780	20.396038	0.000	-0.310	0.00	0.00	689.780	689.727	689.727
RECTA KV 247400	176420.000	354930.429	4609009.430	0.000	689.774	689.774	20.396038	0.000	-0.229	0.00	0.00	689.774	689.817	689.817
RECTA KV 247400	176440.000	354936.727	4609028.412	0.000	689.771	689.771	20.396038	0.000	-0.148	0.00	0.00	689.771	689.699	689.699
RECTA KV 247400	176460.000	354943.026	4609047.395	0.000	689.769	689.769	20.396038	0.000	-0.067	0.00	0.00	689.769	689.792	689.792
RECTA KV 247400	176480.000	354949.325	4609066.377	0.000	689.768	689.768	20.396038	0.000	0.014	0.00	0.00	689.768	689.743	689.743
RECTA Rampa	176500.000	354955.623	4609085.359	0.000	689.769	689.769	20.396038	0.000	0.088	0.00	0.00	689.769	689.741	689.741
RECTA Rampa	176520.000	354961.922	4609104.342	0.000	689.771	689.771	20.396038	0.000	0.088	0.00	0.00	689.771	689.774	689.774
RECTA Rampa	176540.000	354968.220	4609123.324	0.000	689.773	689.773	20.396038	0.000	0.088	0.00	0.00	689.773	689.679	689.679
RECTA Rampa	176560.000	354974.519	4609142.306	0.000	689.774	689.774	20.396038	0.000	0.088	0.00	0.00	689.774	689.648	689.648
RECTA Rampa	176580.000	354980.817	4609161.289	0.000	689.776	689.776	20.396038	0.000	0.088	0.00	0.00	689.776	689.660	689.660
CIRC. Rampa	176597.922	354986.461	4609178.299	-150000.000	689.778	689.778	20.396038	0.000	0.088	0.00	0.00	689.778	698.814	698.814
CIRC. Rampa	176600.000	354987.116	4609180.271	-150000.000	689.778	689.778	20.395156	0.000	0.088	0.00	0.00	689.778	699.779	699.779
CIRC. Rampa	176620.000	354993.413	4609199.254	-150000.000	689.780	689.780	20.386668	0.000	0.088	0.00	0.00	689.780	689.707	689.707
CIRC. Rampa	176640.000	354999.707	4609218.237	-150000.000	689.781	689.781	20.378179	0.000	0.088	0.00	0.00	689.781	689.718	689.718
CIRC. Rampa	176660.000	355005.999	4609237.222	-150000.000	689.783	689.783	20.369691	0.000	0.088	0.00	0.00	689.783	689.721	689.721
CIRC. Rampa	176680.000	355012.289	4609256.207	-150000.000	689.785	689.785	20.361203	0.000	0.088	0.00	0.00	689.785	689.730	689.730

Istram 20.08.08.26 11/02/21 09:46:31 200009 pagina 3

PROYECTO : ESTUDIO INFORMATIVO DE LA INTEGRACION DEL FFCC EN VALLADOLID
GRUPO : 1 : ALTERNATIVA 1
EJE : 1 : VIA 1 UIC

* * * PUNTOS DEL EJE EN PLANTA * * *

TIPO	P.K.	X	Y	RADIO	Z RAS IZ.	Z RAS DR.	AZIMUT	DIST. EJE	PEN(o/oo)	PERAL_I	PERAL_D	HILO BAJO	ZT (eje)	Z TERR.
CIRC. Rampa	176687.719	355014.716	4609263.535	150000.000	689.786	689.786	20.357926	0.000	0.088	0.00	0.00	689.786	689.759	689.759
CIRC. Rampa	176700.000	355018.577	4609275.193	150000.000	689.787	689.787	20.363139	0.000	0.088	0.00	0.00	689.787	689.760	689.760
CIRC. Rampa	176720.000	355024.867	4609294.178	150000.000	689.788	689.788	20.371627	0.000	0.088	0.00	0.00	689.788	689.769	689.769
CIRC. Rampa	176740.000	355031.159	4609313.163	150000.000	689.790	689.790	20.380115	0.000	0.088	0.00	0.00	689.790	689.722	689.722
CIRC. Rampa	176760.000	355037.454	4609332.146	150000.000	689.792	689.792	20.388603	0.000	0.088	0.00	0.00	689.792	689.766	689.766
CIRC. Rampa	176780.000	355043.752	4609351.129	150000.000	689.794	689.794	20.397092	0.000	0.088	0.00	0.00	689.794	689.694	689.694
RECTA Rampa	176782.756	355044.620	4609353.745	0.000	689.794	689.794	20.398261	0.000	0.088	0.00	0.00	689.794	689.685	689.685
RECTA Rampa	176800.000	355050.051	4609370.111	0.000	689.795	689.795	20.398261	0.000	0.088	0.00	0.00	689.795	689.766	689.766
RECTA Rampa	176820.000	355056.350	4609389.093	0.000	689.797	689.797	20.398261	0.000	0.088	0.00	0.00	689.797	689.747	689.747
RECTA Rampa	176840.000	355062.649	4609408.075	0.000	689.799	689.799	20.398261	0.000	0.088	0.00	0.00	689.799	689.633	689.633
RECTA Rampa	176860.000	355068.949	4609427.057	0.000	689.801	689.801	20.398261	0.000	0.088	0.00	0.00	689.801	689.636	689.636
RECTA Rampa	176880.000	355075.248	4609446.039	0.000	689.802	689.802	20.398261	0.000	0.088	0.00	0.00	689.802	689.679	689.679
RECTA Rampa	176900.000	355081.547	4609465.021	0.000	689.804	689.804	20.398261	0.000	0.088	0.00	0.00	689.804	689.634	689.634
RECTA Rampa	176920.000	355087.846	4609484.003	0.000	689.806	689.806	20.398261	0.000	0.088	0.00	0.00	689.806	689.692	689.692
RECTA Rampa	176940.000	355094.145	4609502.986	0.000	689.808	689.808	20.398261	0.000	0.088	0.00	0.00	689.808	689.690	689.690
RECTA Rampa	176960.000	355100.445	4609521.968	0.000	689.809	689.809	20.398261	0.000	0.088	0.00	0.00	689.809	689.679	689.679
RECTA Rampa	176980.000	355106.744	4609540.950	0.000	689.811	689.811	20.398261	0.000	0.088	0.00	0.00	689.811	689.696	689.696
RECTA Rampa	177000.000	355113.043	4609559.932	0.000	689.813	689.813	20.398261	0.000	0.088	0.00	0.00	689.813	689.673	689.673
RECTA Rampa	177020.000	355119.342	4609578.914	0.000	689.815	689.815	20.398261	0.000	0.088	0.00	0.00	689.815	689.644	689.644
RECTA Rampa	177040.000	355125.641	4609597.896	0.000	689.816	689.816	20.398261	0.000	0.088	0.00	0.00	689.816	689.591	689.591
RECTA Rampa	177060.000	355131.941	4609616.878	0.000	689.818	689.818	20.398261	0.000	0.088	0.00	0.00	689.818	689.584	689.584
RECTA Rampa	177080.000	355138.240	4609635.860	0.000	689.820	689.820	20.398261	0.000	0.088	0.00	0.00	689.820	689.705	689.705
RECTA Rampa	177100.000	355144.539	4609654.842	0.000	689.822	689.822	20.398261	0.000	0.088	0.00	0.00	689.822	689.658	689.658
RECTA KV 227000	177120.000	355150.838	4609673.824	0.000	689.824	689.824	20.398261	0.000	0.111	0.00	0.00	689.824	689.667	689.667
RECTA KV 227000	177140.000	355157.138	4609692.806	0.000	689.827	689.827	20.398261	0.000	0.199	0.00	0.00	689.827	689.645	689.645
RECTA KV 227000	177160.000	355163.437	4609711.789	0.000	689.831	689.831	20.398261	0.000	0.287	0.00	0.00	689.831	689.679	689.679
RECTA KV 227000	177180.000	355169.736	4609730.771	0.000	689.838	689.838	20.398261	0.000	0.375	0.00	0.00	689.838	689.637	689.637
RECTA KV 227000	177200.000	355176.035	4609749.753	0.000	689.846	689.846	20.398261	0.000	0.463	0.00	0.00	689.846	689.791	689.791
RECTA KV 227000	177220.000	355182.334	4609768.735	0.000	689.857	689.857	20.398261	0.000	0.552	0.00	0.00	689.857	689.761	689.761
RECTA KV 227000	177240.000	355188.634	4609787.717	0.000	689.869	689.869	20.398261	0.000	0.640	0.00	0.00	689.869	689.791	689.791
RECTA KV 227000	177260.000	355194.933	4609806.699	0.000	689.882	689.882	20.398261	0.000	0.728	0.00	0.00	689.882	689.766	689.766
RECTA Rampa	177280.000	355201.232	4609825.681	0.000	689.898	689.898	20.398261	0.000	0.792	0.00	0.00	689.898	689.849	689.849
RECTA Rampa	177300.000	355207.531	4609844.663	0.000	689.913	689.913	20.398261	0.000	0.792	0.00	0.00	689.913	689.830	689.830
RECTA Rampa	177320.000	355213.830	4609863.645	0.000	689.929	689.929	20.398261	0.000	0.792	0.00	0.00	689.929	689.779	689.779
RECTA Rampa	177340.000	355220.130	4609882.627	0.000	689.945	689.945	20.398261	0.000	0.792	0.00	0.00	689.945	689.768	689.768
RECTA Rampa	177360.000	355226.429	4609901.610	0.000	689.961	689.961	20.398261	0.000	0.792	0.00	0.00	689.961	689.734	689.734
RECTA Rampa	177380.000	355232.728	4609920.592	0.000	689.977	689.977	20.398261	0.000	0.792	0.00	0.00	689.977	689.769	689.769
CIRC. Rampa	177399.144	355238.758	4609938.761	-300000.000	689.992	689.992	20.398261	0.000	0.792	0.00	0.00	689.992	689.812	689.812
CIRC. Rampa	177400.000	355239.027	4609939.574	-300000.000	689.993	689.993	20.398080	0.000	0.792	0.00	0.00	689.993	689.812	689.812
CIRC. Rampa	177420.000	355245.326	4609958.556	-300000.000	690.009	690.009	20.393835	0.000	0.792	0.00	0.00	690.009	689.825	689.825
CIRC. Rampa	177440.000	355251.623	4609977.539	-300000.000	690.024	690.024	20.389591	0.000	0.792	0.00	0.00	690.024	689.840	689.840
CIRC. Rampa	177460.000	355257.919	4609996.522	-300000.000	690.040	690.040	20.385347	0.000	0.792	0.00	0.00	690.040	689.845	689.845
CIRC. Rampa	177477.831	355263.531	4610013.447	370000.000	690.054	690.054	20.381563	0.000	0.792	0.00	0.00	690.054	689.845	689.845
CIRC. Rampa	177480.000	355264.214	4610015.506	370000.000	690.056	690.056	20.381937	0.000	0.792	0.00	0.00	690.056	689.845	689.845
CIRC. Rampa	177500.000	355270.509	4610034.489	370000.000	690.072	690.072	20.385378	0.000	0.792	0.00	0.00	690.072	696.905	696.905
CIRC. Rampa	177520.000	355276.805	4610053.472	370000.000	690.088	690.088	20.388819	0.000	0.792	0.00	0.00	690.088	689.890	689.890
RECTA Rampa	177533.229	355280.969	4610066.028	0.000	690.098	690.098	20.391095	0.000	0.792	0.00	0.00	690.098	689.960	689.960
RECTA Rampa	177540.000	355283.101	4610072.455	0.000	690.104	690.104	20.391095	0.000	0.792	0.00	0.00	690.104	689.888	689.888
RECTA Rampa	177560.000	355289.398	4610091.438	0.000	690.119	690.119	20.391095	0.000	0.792	0.00	0.00	690.119	689.950	689.950
RECTA Rampa	177580.000	355295.696	4610110.421	0.000	690.135	690.135	20.391095	0.000	0.792	0.00	0.00	690.135	689.964	689.964

Istram 20.08.08.26 11/02/21 09:46:31 200009 pagina 4

PROYECTO : ESTUDIO INFORMATIVO DE LA INTEGRACION DEL FFCC EN VALLADOLID
GRUPO : 1 : ALTERNATIVA 1
EJE : 1 : VIA 1 UIC

* * * PUNTOS DEL EJE EN PLANTA * * *

TIPO	P.K.	X	Y	RADIO	Z RAS IZ.	Z RAS DR.	AZIMUT	DIST. EJE	PEN(o/oo)	PERAL_I	PERAL_D	HILO BAJO	ZT (eje)	Z TERR.
RECTA Rampa	177600.000	355301.993	4610129.404	0.000	690.151	690.151	20.391095	0.000	0.792	0.00	0.00	690.151	689.953	689.953
RECTA Rampa	177620.000	355308.290	4610148.386	0.000	690.167	690.167	20.391095	0.000	0.792	0.00	0.00	690.167	689.994	689.994
RECTA Rampa	177640.000	355314.587	4610167.369	0.000	690.183	690.183	20.391095	0.000	0.792	0.00	0.00	690.183	689.998	689.998
RECTA Rampa	177660.000	355320.884	4610186.352	0.000	690.199	690.199	20.391095	0.000	0.792	0.00	0.00	690.199	689.998	689.998
RECTA Rampa	177680.000	355327.181	4610205.335	0.000	690.214	690.214	20.391095	0.000	0.792	0.00	0.00	690.214	690.022	690.022
RECTA Rampa	177700.000	355333.478	4610224.318	0.000	690.230	690.230	20.391095	0.000	0.792	0.00	0.00	690.230	690.060	690.060
RECTA Rampa	177720.000	355339.775	4610243.300	0.000	690.246	690.246	20.391095	0.000	0.792	0.00	0.00	690.246	690.068	690.068
RECTA Rampa	177740.000	355346.072	4610262.283	0.000	690.262	690.262	20.391095	0.000	0.792	0.00	0.00	690.262	690.099	690.099
RECTA Rampa	177760.000	355352.369	4610281.266	0.000	690.278	690.278	20.391095	0.000	0.792	0.00	0.00	690.278	690.178	690.178
RECTA Rampa	177780.000	355358.666	4610300.249	0.000	690.294	690.294	20.391095	0.000	0.792	0.00	0.00	690.294	690.182	690.182
RECTA Rampa	177800.000	355364.963	4610319.232	0.000	690.310	690.310	20.391095	0.000	0.792	0.00	0.00	690.310	690.174	690.174
RECTA Rampa	177820.000	355371.260	4610338.214	0.000	690.325	690.325	20.391095	0.000	0.792	0.00	0.00	690.325	690.208	690.208
RECTA Rampa	177840.000	355377.558	4610357.197	0.000	690.341	690.341	20.391095	0.000	0.792	0.00	0.00	690.341	690.224	690.224
RECTA Rampa	177860.000	355383.855	4610376.180	0.000	690.357	690.357	20.391095	0.000	0.792	0.00	0.00	690.357	690.208	690.208
RECTA Rampa	177880.000	355390.152	4610395.163	0.000	690.373	690.373	20.391095	0.000	0.792	0.00	0.00	690.373	690.253	690.253
RECTA Rampa	177900.000	355396.449	4610414.146	0.000	690.389	690.389	20.391095	0.000	0.792	0.00	0.00	690.389	690.292	690.292
RECTA Rampa	177920.000	355402.746	4610433.128	0.000	690.405	690.405	20.391095	0.000	0.792	0.00	0.00	690.405	690.300	690.300
RECTA KV -339129	177940.000	355409.043	4610452.111	0.000	690.420	690.420	20.391095	0.000	0.769	0.00	0.00	690.420	690.325	690.325
CIRC. KV -339129	177959.290	355415.116	4610470.420	100000.000	690.435	690.435	20.391095	0.000	0.712	0.00	0.00	690.435	690.340	690.340
CIRC. KV -339129	177960.000	355415.340	4610471.094	100000.000	690.435	690.435	20.391547	0.000	0.710	0.00	0.00	690.435	690.340	690.340
CIRC. KV -339129	177980.000	355421.639	4610490.076	100000.000	690.449	690.449	20.404280	0.000	0.651	0.00	0.00	690.449	690.472	690.472
CIRC. KV -339129	178000.000	355427.942	4610509.057	100000.000	690.461	690.461	20.417012	0.000	0.592	0.00	0.00	690.461	690.467	690.467
CIRC. KV -339129	178020.000	355434.249	4610528.037	100000.000	690.472	690.472	20.429744	0.000	0.533	0.00	0.00	690.472	690.537	690.537
CIRC. KV -339129	178040.000	355440.559	4610547.015	100000.000	690.482	690.482	20.442477	0.000	0.474	0.00	0.00	690.482	690.490	690.490
CIRC. KV -339129	178041.335	355440.981	4610548.282	-100000.000	690.483	690.483	20.443327	0.000	0.470	0.00	0.00	690.483	690.486	690.486
CIRC. KV -339129	178060.000	355446.870	4610565.993	-100000.000	690.491	690.491	20.431445	0.000	0.415	0.00	0.00	690.491	690.497	690.497
CIRC. Rampa	178080.000	355453.177	4610584.973	-100000.000	690.499	690.499	20.418712	0.000	0.400	0.00	0.00	690.499	690.454	690.454
CIRC. Rampa	178100.000	355459.481	4610603.953	-100000.000	690.507	690.507	20.405980	0.000	0.400	0.00	0.00	690.507	690.437	690.437
CIRC. Rampa	178120.000	355465.780	4610622.935	-100000.000	690.515	690.515	20.393248	0.000	0.400	0.00	0.00	690.515	690.420	690.420
RECTA Rampa	178126.050	355467.685	4610628.677	0.000	690.518	690.518	20.389396	0.000	0.400	0.00	0.00	690.518	690.394	690.394
RECTA Rampa	178140.000	355472.077	4610641.918	0.000	690.523	690.523	20.389396	0.000	0.400	0.00	0.00	690.523	690.403	690.403
RECTA Rampa	178160.000	355478.374	4610660.901	0.000	690.531	690.531	20.389396	0.000	0.400	0.00	0.00	690.531	690.355	690.355
RECTA Rampa	178180.000	355484.670	4610679.884	0.000	690.539	690.539	20.389396	0.000	0.400	0.00	0.00	690.539	690.404	690.404
RECTA Rampa	178200.000	355490.967	4610698.867	0.000	690.547	690.547	20.389396	0.000	0.400	0.00	0.00	690.547	690.438	690.438
CIRC. KV 42592	178209.392	355493.924	4610707.782	-40000.000	690.551	690.551	20.389396	0.000	0.428	0.00	0.00	690.551	690.446	690.446
CIRC. KV 42592	178220.000	355497.262	4610717.850	-40000.000	690.557	690.557	20.372513	0.000	0.677	0.00	0.00	690.557	690.459	690.459
CIRC. KV 42592	178240.000	355503.549	4610736.837	-40000.000	690.575	690.575	20.340682	0.000	1.146	0.00	0.00	690.575	690.506	690.506
CIRC. KV 42592	178260.000	355509.826	4610755.826	-40000.000	690.603	690.603	20.308851	0.000	1.616	0.00	0.00	690.603	690.631	690.631
CIRC. KV 42592	178265.722	355511.620	4610761.260	40000.000	690.613	690.613	20.299744	0.000	1.750	0.00	0.00	690.613	690.580	690.580
CIRC. KV 42592	178280.000	355516.099	4610774.817	40000.000	690.640	690.640	20.322468	0.000	2.086	0.00	0.00	690.640	690.526	690.526
CIRC. KV 42592	178300.000	355522.380	4610793.805	40000.000	690.686	690.686	20.354299	0.000	2.555	0.00	0.00	690.686	690.526	690.526
CIRC. KV 42592	178320.000	355528.671	4610812.790	40000.000	690.742	690.742	20.386130	0.000	3.025	0.00	0.00	690.742	690.601	690.601
RECTA KV 42592	178328.738	355531.422	4610821.083	0.000	690.769	690.769	20.400037	0.000	3.230	0.00	0.00	690.769	690.627	690.627
RECTA KV 42592	178340.000	355534.970	4610831.772	0.000	690.807	690.807	20.400037	0.000	3.494	0.00	0.00	690.807	690.741	690.741
RECTA Rampa	178360.000	355541.270	4610850.754	0.000	690.878	690.878	20.400037	0.000	3.523	0.00	0.00	690.878	690.864	690.864
RECTA Rampa	178380.000	355547.569	4610869.736	0.000	690.948	690.948	20.400037	0.000	3.523	0.00	0.00	690.948	690.952	690.952
RECTA Rampa	178400.000	355553.869	4610888.718	0.000	691.019	691.019	20.400037	0.000	3.523	0.00	0.00	691.019	690.965	690.965
RECTA Rampa	178420.000	355560.169	4610907.700	0.000	691.089	691.089	20.400037	0.000	3.523	0.00	0.00	691.089	691.020	691.020
RECTA Rampa	178440.000	355566.469	4610926.682	0.000	691.160	691.160	20.400037	0.000	3.523	0.00	0.00	691.160	691.007	691.007
RECTA Rampa	178460.000	355572.768	4610945.664	0.000	691.230	691.230	20.400037	0.000	3.523	0.00	0.00	691.230	691.171	691.171

Istram 20.08.08.26 11/02/21 09:46:31 200009 pagina 5

PROYECTO : ESTUDIO INFORMATIVO DE LA INTEGRACION DEL FFCC EN VALLADOLID
GRUPO : 1 : ALTERNATIVA 1
EJE : 1 : VIA 1 UIC

* * * PUNTOS DEL EJE EN PLANTA * * *

TIPO	P.K.	X	Y	RADIO	Z RAS IZ.	Z RAS DR.	AZIMUT	DIST. EJE	PEN(o/oo)	PERAL_I	PERAL_D	HILO BAJO	ZT (eje)	Z TERR.
RECTA Rampa	178480.000	355579.068	4610964.645	0.000	691.300	691.300	20.400037	0.000	3.523	0.00	0.00	691.300	691.255	691.255
CLOT. Rampa	178488.135	355581.630	4610972.366	1000000.000	691.329	691.329	20.400037	0.000	3.523	0.00	0.00	691.329	691.238	691.238
CLOT. Rampa	178500.000	355585.371	4610983.626	6106.181	691.371	691.371	20.461888	0.000	3.523	0.00	0.00	691.371	691.261	691.261
CLOT. Rampa	178520.000	355591.738	4611002.586	2273.653	691.441	691.441	20.846145	0.000	3.523	0.00	0.00	691.441	691.411	691.411
CLOT. Rampa	178540.000	355598.271	4611021.488	1396.895	691.512	691.512	21.581883	0.000	3.523	0.00	0.00	691.512	691.424	691.424
CLOT. Rampa	178560.000	355605.074	4611040.296	1008.140	691.582	691.582	22.669102	0.000	3.523	0.00	0.00	691.582	691.566	691.566
CLOT. Rampa	178580.000	355612.249	4611058.964	788.657	691.653	691.653	24.107802	0.000	3.523	0.00	0.00	691.653	691.604	691.604
CLOT. Rampa	178600.000	355619.895	4611077.444	647.656	691.723	691.723	25.897982	0.000	3.523	0.00	0.00	691.723	691.642	691.642
CLOT. Rampa	178620.000	355628.108	4611095.679	549.425	691.794	691.794	28.039644	0.000	3.523	0.00	0.00	691.794	691.727	691.727
CIRC. Rampa	178638.135	355636.121	4611111.947	483.000	691.858	691.858	30.285437	0.000	3.523	0.00	0.00	691.858	691.816	691.816
CIRC. Rampa	178640.000	355636.978	4611113.603	483.000	691.864	691.864	30.531258	0.000	3.523	0.00	0.00	691.864	691.827	691.827
CIRC. Rampa	178660.000	355646.571	4611131.150	483.000	691.935	691.935	33.167364	0.000	3.523	0.00	0.00	691.935	691.845	691.845
CIRC. Rampa	178680.000	355656.882	4611148.286	483.000	692.005	692.005	35.803471	0.000	3.523	0.00	0.00	692.005	691.951	691.951
CIRC. Rampa	178700.000	355667.894	4611164.980	483.000	692.075	692.075	38.439578	0.000	3.523	0.00	0.00	692.075	692.011	692.011
CIRC. KV -38676	178720.000	355679.587	4611181.204	483.000	692.142	692.142	41.075685	0.000	3.076	0.00	0.00	692.142	691.936	691.936
CIRC. KV -38676	178740.000	355691.942	4611196.930	483.000	692.198	692.198	43.711791	0.000	2.559	0.00	0.00	692.198	691.971	691.971
CIRC. KV -38676	178760.000	355704.937	4611212.131	483.000	692.244	692.244	46.347898	0.000	2.042	0.00	0.00	692.244	692.138	692.138
CIRC. KV -38676	178780.000	355718.550	4611226.780	483.000	692.280	692.280	48.984005	0.000	1.524	0.00	0.00	692.280	692.100	692.100
CIRC. KV -38676	178800.000	355732.758	4611240.854	483.000	692.305	692.305	51.620111	0.000	1.007	0.00	0.00	692.305	692.068	692.068
CIRC. KV -38676	178820.000	355747.537	4611254.328	483.000	692.320	692.320	54.256218	0.000	0.490	0.00	0.00	692.320	692.123	692.123
CIRC. KV -38676	178840.000	355762.860	4611267.178	483.000	692.325	692.325	56.892325	0.000	-0.027	0.00	0.00	692.325	692.129	692.129
CIRC. KV -38676	178860.000	355778.703	4611279.383	483.000	692.319	692.319	59.528432	0.000	-0.544	0.00	0.00	692.319	692.145	692.145
CIRC. Pendiente	178880.000	355795.037	4611290.922	483.000	692.303	692.303	62.164538	0.000	-1.002	0.00	0.00	692.303	692.107	692.107
CIRC. Pendiente	178900.000	355811.834	4611301.775	483.000	692.283	692.283	64.800645	0.000	-1.002	0.00	0.00	692.283	692.109	692.109
CIRC. Pendiente	178920.000	355829.067	4611311.923	483.000	692.263	692.263	67.436752	0.000	-1.002	0.00	0.00	692.263	700.004	700.004
CIRC. Pendiente	178940.000	355846.705	4611321.349	483.000	692.243	692.243	70.072858	0.000	-1.002	0.00	0.00	692.243	692.054	692.054
CLOT. Pendiente	178943.921	355850.208	4611323.111	483.000	692.239	692.239	70.589720	0.000	-1.002	0.00	0.00	692.239	692.054	692.054
CLOT. Pendiente	178960.000	355864.705	4611330.062	711.940	692.223	692.223	72.368220	0.000	-1.002	0.00	0.00	692.223	692.039	692.039
CLOT. Pendiente	178980.000	355882.944	4611338.268	1734.739	692.203	692.203	73.629408	0.000	-1.002	0.00	0.00	692.203	691.971	691.971
RECTA Pendiente	178993.921	355895.703	4611343.837	0.000	692.189	692.189	73.884853	0.000	-1.002	0.00	0.00	692.189	691.962	691.962
RECTA Pendiente	179000.000	355901.278	4611346.261	0.000	692.183	692.183	73.884853	0.000	-1.002	0.00	0.00	692.183	691.961	691.961
RECTA Pendiente	179020.000	355919.618	4611354.237	0.000	692.163	692.163	73.884853	0.000	-1.002	0.00	0.00	692.163	691.988	691.988
RECTA Pendiente	179040.000	355937.959	4611362.213	0.000	692.143	692.143	73.884853	0.000	-1.002	0.00	0.00	692.143	691.620	691.620
RECTA Pendiente	179060.000	355956.300	4611370.189	0.000	692.123	692.123	73.884853	0.000	-1.002	0.00	0.00	692.123	691.984	691.984
CIRC. KV -215599	179078.400	355973.173	4611377.527	13000.000	692.104	692.104	73.884853	0.000	-1.019	0.00	0.00	692.104	691.975	691.975
CIRC. KV -215599	179080.000	355974.641	4611378.165	13000.000	692.103	692.103	73.892691	0.000	-1.026	0.00	0.00	692.103	691.964	691.964
CIRC. KV -215599	179100.000	355992.988	4611386.125	13000.000	692.081	692.081	73.990632	0.000	-1.119	0.00	0.00	692.081	691.940	691.940
CIRC. KV -215599	179100.200	355993.172	4611386.205	-6700.000	692.081	692.081	73.991614	0.000	-1.120	0.00	0.00	692.081	691.938	691.938
CIRC. KV -215599	179120.000	356011.331	4611394.097	-6700.000	692.058	692.058	73.803482	0.000	-1.212	0.00	0.00	692.058	691.808	691.808
RECTA KV -215599	179120.524	356011.811	4611394.307	0.000	692.057	692.057	73.798503	0.000	-1.214	0.00	0.00	692.057	691.808	691.808
RECTA KV -215599	179140.000	356029.661	4611402.098	0.000	692.033	692.033	73.798503	0.000	-1.305	0.00	0.00	692.033	691.799	691.799
RECTA Pendiente	179160.000	356047.990	4611410.099	0.000	692.006	692.006	73.798503	0.000	-1.350	0.00	0.00	692.006	691.773	691.773
RECTA Pendiente	179180.000	356066.320	4611418.100	0.000	691.979	691.979	73.798503	0.000	-1.350	0.00	0.00	691.979	691.755	691.755
CIRC. Pendiente	179193.071	356078.299	4611423.329	50000.000	691.961	691.961	73.798503	0.000	-1.350	0.00	0.00	691.961	691.727	691.727
CIRC. Pendiente	179200.000	356084.650	4611426.101	50000.000	691.952	691.952	73.807326	0.000	-1.350	0.00	0.00	691.952	691.712	691.712
CIRC. Pendiente	179219.639	356102.652	4611433.951	-90000.000	691.926	691.926	73.832330	0.000	-1.350	0.00	0.00	691.926	691.701	691.701
CIRC. Pendiente	179220.000	356102.983	4611434.096	-90000.000	691.925	691.925	73.832075	0.000	-1.350	0.00	0.00	691.925	691.701	691.701
CIRC. KV 89157	179240.000	356121.316	4611442.089	-90000.000	691.900	691.900	73.817928	0.000	-1.159	0.00	0.00	691.900	691.727	691.727
CIRC. KV 89157	179260.000	356139.648	4611450.087	-90000.000	691.879	691.879	73.803781	0.000	-0.935	0.00	0.00	691.879	691.812	691.812
CIRC. KV 89157	179280.000	356157.977	4611458.088	-90000.000	691.862	691.862	73.789633	0.000	-0.710	0.00	0.00	691.862	691.835	691.835

Istram 20.08.08.26 11/02/21 09:46:31 200009 pagina 6

PROYECTO : ESTUDIO INFORMATIVO DE LA INTEGRACION DEL FFCC EN VALLADOLID
GRUPO : 1 : ALTERNATIVA 1
EJE : 1 : VIA 1 UIC

* * * PUNTOS DEL EJE EN PLANTA * * *

TIPO	P.K.	X	Y	RADIO	Z RAS IZ.	Z RAS DR.	AZIMUT	DIST. EJE	PEN(o/oo)	PERAL_I	PERAL_D	HILO BAJO	ZT (eje)	Z TERR.
RECTA KV 89157	179295.336	356172.031	4611464.226	0.000	691.853	691.853	73.778785	0.000	-0.538	0.00	0.00	691.853	691.853	691.853
RECTA Pendiente	179300.000	356176.305	4611466.094	0.000	691.850	691.850	73.778785	0.000	-0.509	0.00	0.00	691.850	691.858	691.858
RECTA Pendiente	179320.000	356194.632	4611474.100	0.000	691.840	691.840	73.778785	0.000	-0.509	0.00	0.00	691.840	691.868	691.868
RECTA Pendiente	179340.000	356212.960	4611482.107	0.000	691.830	691.830	73.778785	0.000	-0.509	0.00	0.00	691.830	691.796	691.796
RECTA Pendiente	179360.000	356231.287	4611490.114	0.000	691.820	691.820	73.778785	0.000	-0.509	0.00	0.00	691.820	691.602	691.602
RECTA Pendiente	179380.000	356249.615	4611498.120	0.000	691.810	691.810	73.778785	0.000	-0.509	0.00	0.00	691.810	691.608	691.608
CIRC. Pendiente	179385.669	356254.809	4611500.390	100000.000	691.807	691.807	73.778785	0.000	-0.509	0.00	0.00	691.807	691.618	691.618
CIRC. KV 25615	179400.000	356267.942	4611506.126	100000.000	691.800	691.800	73.787909	0.000	-0.384	0.00	0.00	691.800	691.646	691.646
CIRC. KV 25615	179420.000	356286.272	4611514.128	100000.000	691.800	691.800	73.800641	0.000	0.396	0.00	0.00	691.800	691.654	691.654
CIRC. KV 25615	179440.000	356304.603	4611522.127	100000.000	691.816	691.816	73.813374	0.000	1.177	0.00	0.00	691.816	691.654	691.654
CIRC. KV 25615	179454.750	356318.122	4611528.023	-100000.000	691.837	691.837	73.822764	0.000	1.753	0.00	0.00	691.837	691.688	691.688
CIRC. KV 25615	179460.000	356322.935	4611530.122	-100000.000	691.847	691.847	73.819421	0.000	1.958	0.00	0.00	691.847	691.701	691.701
CIRC. Rampa	179480.000	356341.267	4611538.119	-100000.000	691.893	691.893	73.806689	0.000	2.419	0.00	0.00	691.893	691.757	691.757
CIRC. Rampa	179500.000	356359.597	4611546.119	-100000.000	691.941	691.941	73.793956	0.000	2.419	0.00	0.00	691.941	691.768	691.768
CIRC. Rampa	179520.000	356377.925	4611554.123	-100000.000	691.989	691.989	73.781224	0.000	2.419	0.00	0.00	691.989	691.918	691.918
CIRC. Rampa	179540.000	356396.252	4611562.131	-100000.000	692.038	692.038	73.768491	0.000	2.419	0.00	0.00	692.038	692.026	692.026
RECTA Rampa	179553.490	356408.613	4611567.535	0.000	692.070	692.070	73.759903	0.000	2.419	0.00	0.00	692.070	691.936	691.936
RECTA Rampa	179560.000	356414.578	4611570.143	0.000	692.086	692.086	73.759903	0.000	2.419	0.00	0.00	692.086	691.931	691.931
RECTA Rampa	179580.000	356432.903	4611578.155	0.000	692.134	692.134	73.759903	0.000	2.419	0.00	0.00	692.134	691.984	691.984
RECTA KV -48355	179600.000	356451.228	4611586.167	0.000	692.179	692.179	73.759903	0.000	2.019	0.00	0.00	692.179	692.022	692.022
CLOT. KV -48355	179600.539	356451.721	4611586.383	-1000000.000	692.180	692.180	73.759903	0.000	2.008	0.00	0.00	692.180	692.025	692.025
CLOT. KV -48355	179620.000	356469.511	4611594.273	-616.605	692.215	692.215	72.755247	0.000	1.606	0.00	0.00	692.215	692.066	692.066
CIRC. KV -48355	179620.539	356470.001	4611594.496	-600.000	692.216	692.216	72.698870	0.000	1.594	0.00	0.00	692.216	692.070	692.070
CIRC. KV -48355	179640.000	356487.566	4611602.874	-600.000	692.243	692.243	70.633951	0.000	1.192	0.00	0.00	692.243	692.073	692.073
CLOT. KV -48355	179642.851	356490.116	4611604.149	-600.000	692.246	692.246	70.331440	0.000	1.133	0.00	0.00	692.246	692.044	692.044
CLOT. KV -48355	179660.000	356505.356	4611612.011	-4208.900	692.263	692.263	69.291969	0.000	0.778	0.00	0.00	692.263	692.105	692.105
CLOT. KV -48355	179662.851	356507.882	4611613.334	1000000.000	692.265	692.265	69.270407	0.000	0.719	0.00	0.00	692.265	692.092	692.092
CLOT. KV -48355	179680.000	356523.110	4611621.220	583.128	692.274	692.274	70.206508	0.000	0.365	0.00	0.00	692.274	692.083	692.083
CIRC. Rampa	179682.851	356525.658	4611622.499	500.000	692.275	692.275	70.543646	0.000	0.351	0.00	0.00	692.275	692.075	692.075
CIRC. Rampa	179700.000	356541.132	4611629.889	500.000	692.281	692.281	72.727112	0.000	0.351	0.00	0.00	692.281	692.075	692.075
CLOT. Rampa	179717.326	356557.014	4611636.812	500.000	692.287	692.287	74.933174	0.000	0.351	0.00	0.00	692.287	692.090	692.090
CLOT. Rampa	179720.000	356559.486	4611637.832	577.155	692.288	692.288	75.250837	0.000	0.351	0.00	0.00	692.288	692.103	692.103
RECTA Rampa	179737.326	356575.584	4611644.238	0.000	692.294	692.294	76.206414	0.000	0.351	0.00	0.00	692.294	692.096	692.096
RECTA Rampa	179740.000	356578.073	4611645.215	0.000	692.295	692.295	76.206414	0.000	0.351	0.00	0.00	692.295	692.085	692.085
RECTA Rampa	179760.000	356596.692	4611652.517	0.000	692.302	692.302	76.206414	0.000	0.351	0.00	0.00	692.302	692.128	692.128
CLOT. KV 101582	179779.690	356615.023	4611659.706	-1000000.000	692.309	692.309	76.206414	0.000	0.396	0.00	0.00	692.309	692.081	692.081
CLOT. KV 101582	179780.000	356615.312	4611659.819	-70537.649	692.310	692.310	76.206274	0.000	0.399	0.00	0.00	692.310	692.081	692.081
CIRC. KV 101582	179798.690	356632.692	4611666.691	-1150.000	692.319	692.319	75.680511	0.000	0.583	0.00	0.00	692.319	692.104	692.104
CIRC. KV 101582	179800.000	356633.907	4611667.180	-1150.000	692.320	692.320	75.608004	0.000	0.596	0.00	0.00	692.320	692.104	692.104
CLOT. KV 101582	179818.066	356650.609	4611674.065	-1150.000	692.332	692.332	74.607930	0.000	0.774	0.00	0.00	692.332	692.142	692.142
CLOT. KV 101582	179820.000	356652.391	4611674.818	-1280.361	692.333	692.333	74.506291	0.000	0.793	0.00	0.00	692.333	692.153	692.153
RECTA KV 101582	179837.066	356668.077	4611681.541	0.000	692.348	692.348	74.082026	0.000	0.961	0.00	0.00	692.348	692.174	692.174
RECTA KV 101582	179840.000	356670.772	4611682.703	0.000	692.351	692.351	74.082026	0.000	0.990	0.00	0.00	692.351	692.176	692.176
RECTA Rampa	179860.000	356689.137	4611690.622	0.000	692.372	692.372	74.082026	0.000	1.040	0.00	0.00	692.372	692.197	692.197
RECTA Rampa	179880.000	356707.502	4611698.541	0.000	692.393	692.393	74.082026	0.000	1.040	0.00	0.00	692.393	692.203	692.203
RECTA Rampa	179900.000	356725.868	4611706.461	0.000	692.414	692.414	74.082026	0.000	1.040	0.00	0.00	692.414	692.221	692.221
RECTA Rampa	179920.000	356744.233	4611714.380	0.000	692.434	692.434	74.082026	0.000	1.040	0.00	0.00	692.434	692.221	692.221
RECTA Rampa	179940.000	356762.598	4611722.299	0.000	692.455	692.455	74.082026	0.000	1.040	0.00	0.00	692.455	692.230	692.230
RECTA KV 21264	179960.000	356780.963	4611730.218	0.000	692.476	692.476	74.082026	0.000	1.126	0.00	0.00	692.476	692.260	692.260
CIRC. KV 21264	179967.757	356788.087	4611733.290	200000.000	692.486	692.486	74.082026	0.000	1.491	0.00	0.00	692.486	692.285	692.285

Istram 20.08.08.26 11/02/21 09:46:31 200009 pagina 7
PROYECTO : ESTUDIO INFORMATIVO DE LA INTEGRACION DEL FFCC EN VALLADOLID
GRUPO : 1 : ALTERNATIVA 1
EJE : 1 : VIA 1 UIC

* * * PUNTOS DEL EJE EN PLANTA * * *

TIPO	P.K.	X	Y	RADIO	Z RAS IZ.	Z RAS DR.	AZIMUT	DIST. EJE	PEN(o/oo)	PERAL_I	PERAL_D	HILO BAJO	ZT (eje)	Z TERR.
CIRC. KV 21264	179980.000	356799.329	4611738.137	200000.000	692.508	692.508	74.085923	0.000	2.067	0.00	0.00	692.508	692.292	692.292
CIRC. KV 21264	179991.838	356810.200	4611742.824	-150000.000	692.536	692.536	74.089692	0.000	2.623	0.00	0.00	692.536	692.324	692.324
CIRC. KV 21264	180000.000	356817.695	4611746.055	-150000.000	692.559	692.559	74.086228	0.000	3.007	0.00	0.00	692.559	692.339	692.339
RECTA KV 21264	180017.934	356834.163	4611753.156	0.000	692.620	692.620	74.078617	0.000	3.850	0.00	0.00	692.620	692.403	692.403
RECTA KV 21264	180020.000	356836.060	4611753.974	0.000	692.628	692.628	74.078617	0.000	3.948	0.00	0.00	692.628	692.408	692.408
RECTA Rampa	180040.000	356854.425	4611761.895	0.000	692.713	692.713	74.078617	0.000	4.332	0.00	0.00	692.713	692.481	692.481
RECTA Rampa	180060.000	356872.790	4611769.815	0.000	692.800	692.800	74.078617	0.000	4.332	0.00	0.00	692.800	692.477	692.477
CLOT. Rampa	180073.886	356885.541	4611775.314	1000000.000	692.860	692.860	74.078617	0.000	4.332	0.00	0.00	692.860	692.478	692.478
CLOT. Rampa	180080.000	356891.155	4611777.734	5888.322	692.887	692.887	74.111666	0.000	4.332	0.00	0.00	692.887	692.478	692.478
CIRC. Rampa	180093.886	356903.920	4611783.200	1800.000	692.947	692.947	74.432294	0.000	4.332	0.00	0.00	692.947	692.481	692.481
CIRC. Rampa	180100.000	356909.552	4611785.581	1800.000	692.973	692.973	74.648526	0.000	4.332	0.00	0.00	692.973	692.484	692.484
CIRC. Rampa	180120.000	356928.030	4611793.234	1800.000	693.060	693.060	75.355881	0.000	4.332	0.00	0.00	693.060	692.495	692.495
CLOT. Rampa	180129.691	356937.013	4611796.868	1800.000	693.102	693.102	75.698619	0.000	4.332	0.00	0.00	693.102	692.555	692.555
CLOT. Rampa	180140.000	356946.589	4611800.686	3714.905	693.147	693.147	75.969262	0.000	4.332	0.00	0.00	693.147	692.791	692.791
CLOT. Rampa	180149.691	356955.601	4611804.249	-1000000.000	693.188	693.188	76.052297	0.000	4.332	0.00	0.00	693.188	692.828	692.828
CLOT. Rampa	180160.000	356965.186	4611808.046	-1745.995	693.233	693.233	75.864349	0.000	4.332	0.00	0.00	693.233	692.907	692.907
CIRC. Rampa	180169.691	356974.175	4611811.665	-900.000	693.275	693.275	75.344941	0.000	4.332	0.00	0.00	693.275	693.005	693.005
CIRC. Rampa	180180.000	356983.698	4611815.614	-900.000	693.320	693.320	74.615707	0.000	4.332	0.00	0.00	693.320	693.074	693.074
CIRC. Rampa	180200.000	357002.042	4611823.583	-900.000	693.406	693.406	73.200996	0.000	4.332	0.00	0.00	693.406	693.135	693.135
CIRC. Rampa	180220.000	357020.203	4611831.958	-900.000	693.493	693.493	71.786286	0.000	4.332	0.00	0.00	693.493	693.241	693.241
CIRC. Rampa	180240.000	357038.174	4611840.734	-900.000	693.580	693.580	70.371575	0.000	4.332	0.00	0.00	693.580	693.302	693.302
CIRC. Rampa	180260.000	357055.946	4611849.907	-900.000	693.666	693.666	68.956865	0.000	4.332	0.00	0.00	693.666	693.414	693.414
CLOT. Rampa	180261.268	357057.065	4611850.502	-900.000	693.672	693.672	68.867206	0.000	4.332	0.00	0.00	693.672	693.426	693.426
CLOT. Rampa	180280.000	357073.512	4611859.469	-983.765	693.753	693.753	67.598567	0.000	4.332	0.00	0.00	693.753	693.575	693.575
CIRC. Rampa	180281.268	357074.619	4611860.087	-990.000	693.758	693.758	67.516800	0.000	4.332	0.00	0.00	693.758	693.579	693.579
CIRC. Rampa	180300.000	357090.877	4611869.390	-990.000	693.840	693.840	66.312208	0.000	4.332	0.00	0.00	693.840	693.653	693.653
CIRC. Rampa	180320.000	357108.039	4611879.660	-990.000	693.926	693.926	65.026107	0.000	4.332	0.00	0.00	693.926	693.754	693.754
CIRC. Rampa	180340.000	357124.989	4611890.274	-990.000	694.013	694.013	63.740007	0.000	4.332	0.00	0.00	694.013	693.882	693.882
CIRC. Rampa	180360.000	357141.722	4611901.229	-990.000	694.100	694.100	62.453906	0.000	4.332	0.00	0.00	694.100	693.984	693.984
CIRC. Rampa	180380.000	357158.230	4611912.520	-990.000	694.186	694.186	61.167806	0.000	4.332	0.00	0.00	694.186	694.081	694.081
CIRC. Rampa	180400.000	357174.506	4611924.142	-990.000	694.273	694.273	59.881705	0.000	4.332	0.00	0.00	694.273	694.187	694.187
CLOT. KV -261716	180415.560	357187.005	4611933.409	-990.000	694.340	694.340	58.881136	0.000	4.279	0.00	0.00	694.340	694.229	694.229
CLOT. KV -261716	180420.000	357190.544	4611936.090	-987.352	694.359	694.359	58.595221	0.000	4.262	0.00	0.00	694.359	694.242	694.242
CLOT. KV -261716	180440.000	357206.337	4611948.361	-975.596	694.443	694.443	57.297902	0.000	4.185	0.00	0.00	694.443	694.316	694.316
CIRC. KV -261716	180458.444	357220.676	4611959.962	-965.000	694.520	694.520	56.087729	0.000	4.115	0.00	0.00	694.520	694.381	694.381
CIRC. KV -261716	180460.000	357221.875	4611960.953	-965.000	694.526	694.526	55.985090	0.000	4.109	0.00	0.00	694.526	694.390	694.390
CIRC. KV -261716	180480.000	357237.149	4611973.863	-965.000	694.608	694.608	54.665671	0.000	4.033	0.00	0.00	694.608	694.497	694.497
CIRC. KV -261716	180500.000	357252.152	4611987.088	-965.000	694.688	694.688	53.346252	0.000	3.956	0.00	0.00	694.688	694.530	694.530
CIRC. Rampa	180520.000	357266.878	4612000.621	-965.000	694.767	694.767	52.026832	0.000	3.950	0.00	0.00	694.767	694.553	694.553
CIRC. Rampa	180540.000	357281.321	4612014.456	-965.000	694.846	694.846	50.707413	0.000	3.950	0.00	0.00	694.846	694.676	694.676
CIRC. Rampa	180560.000	357295.473	4612028.587	-965.000	694.925	694.925	49.387994	0.000	3.950	0.00	0.00	694.925	694.771	694.771
CIRC. Rampa	180580.000	357309.330	4612043.008	-965.000	695.004	695.004	48.068575	0.000	3.950	0.00	0.00	695.004	694.838	694.838
CLOT. Rampa	180595.473	357319.843	4612054.361	-965.000	695.065	695.065	47.047828	0.000	3.950	0.00	0.00	695.065	694.882	694.882
CLOT. Rampa	180600.000	357322.884	4612057.714	-965.375	695.083	695.083	46.749214	0.000	3.950	0.00	0.00	695.083	694.888	694.888
CLOT. KV 103962	180620.000	357336.132	4612072.697	-967.038	695.163	695.163	45.431441	0.000	4.123	0.00	0.00	695.163	694.921	694.921
CLOT. KV 103962	180640.000	357349.066	4612087.951	-968.706	695.248	695.248	44.115936	0.000	4.315	0.00	0.00	695.248	695.056	695.056
CIRC. KV 103962	180655.473	357358.855	4612099.934	-970.000	695.315	695.315	43.099772	0.000	4.464	0.00	0.00	695.315	695.123	695.123
CIRC. KV 103962	180660.000	357361.683	4612103.469	-970.000	695.336	695.336	42.802639	0.000	4.508	0.00	0.00	695.336	695.148	695.148
CIRC. KV 103962	180680.000	357373.977	4612119.244	-970.000	695.428	695.428	41.490021	0.000	4.700	0.00	0.00	695.428	695.309	695.309
CIRC. Rampa	180700.000	357385.944	4612135.268	-970.000	695.523	695.523	40.177403	0.000	4.816	0.00	0.00	695.523	695.478	695.478

Istram 20.08.08.26 11/02/21 09:46:31 200009 pagina 8
PROYECTO : ESTUDIO INFORMATIVO DE LA INTEGRACION DEL FFCC EN VALLADOLID
GRUPO : 1 : ALTERNATIVA 1
EJE : 1 : VIA 1 UIC

* * * PUNTOS DEL EJE EN PLANTA * * *

TIPO	P.K.	X	Y	RADIO	Z RAS IZ.	Z RAS DR.	AZIMUT	DIST. EJE	PEN(o/oo)	PERAL_I	PERAL_D	HILO BAJO	ZT (eje)	Z TERR.
CIRC. Rampa	180720.000	357397.577	4612151.536	-970.000	695.620	695.620	38.864785	0.000	4.816	0.00	0.00	695.620	695.517	695.517
CIRC. Rampa	180740.000	357408.873	4612168.041	-970.000	695.716	695.716	37.552167	0.000	4.816	0.00	0.00	695.716	695.614	695.614
CIRC. Rampa	180760.000	357419.826	4612184.775	-970.000	695.812	695.812	36.239549	0.000	4.816	0.00	0.00	695.812	695.734	695.734
CIRC. Rampa	180780.000	357430.431	4612201.731	-970.000	695.909	695.909	34.926931	0.000	4.816	0.00	0.00	695.909	695.863	695.863
CLOT. Rampa	180786.639	357433.874	4612207.407	-970.000	695.941	695.941	34.491194	0.000	4.816	0.00	0.00	695.941	695.909	695.909
CLOT. KV -107510	180800.000	357440.689	4612218.899	-1139.104	696.005	696.005	33.679401	0.000	4.727	0.00	0.00	696.005	696.003	696.003
CLOT. KV -107510	180820.000	357450.644	4612236.245	-1541.335	696.097	696.097	32.707491	0.000	4.541	0.00	0.00	696.097	696.019	696.019
CLOT. KV -107510	180840.000	357460.373	4612253.719	-2382.694	696.186	696.186	32.027275	0.000	4.355	0.00	0.00	696.186	696.077	696.077
CLOT. KV -107510	180860.000	357469.956	4612271.274	-5246.645	696.271	696.271	31.638752	0.000	4.169	0.00	0.00	696.271	696.261	696.261
RECTA KV -107510	180876.639	357477.873	4612285.909	0.000	696.340	696.340	31.537803	0.000	4.014	0.00	0.00	696.340	696.317	696.317
RECTA KV -107510	180880.000	357479.471	4612288.866	0.000	696.353	696.353	31.537803	0.000	3.983	0.00	0.00	696.353	696.317	696.317
RECTA Rampa	180900.000	357488.979	4612306.461	0.000	696.431	696.431	31.537803	0.000	3.886	0.00	0.00	696.431	696.398	696.398
RECTA Rampa	180920.000	357498.486	4612324.057	0.000	696.509	696.509	31.537803	0.000	3.886	0.00	0.00	696.509	696.545	696.545
RECTA Rampa	180940.000	357507.994	4612341.653	0.000	696.587	696.587	31.537803	0.000	3.886	0.00	0.00	696.587	696.559	696.559
RECTA Rampa	180960.000	357517.501	4612359.248	0.000	696.664	696.664	31.537803	0.000	3.886	0.00	0.00	696.664	696.690	696.690
RECTA Rampa	180980.000	357527.009	4612376.844	0.000	696.742	696.742	31.537803	0.000	3.886	0.00	0.00	696.742	696.739	696.739
CLOT. Rampa	180999.450	357536.255	4612393.955	1000000.000	696.818	696.818	31.537803	0.000	3.886	0.00	0.00	696.818	696.799	696.799
CLOT. Rampa	181000.000	357536.516	4612394.440	1000000.000	696.820	696.820	31.537808	0.000	3.886	0.00	0.00	696.820	696.801	696.801
CIRC. KV -18339	181019.450	357545.763	4612411.551	92000.000	696.887	696.887	31.544723	0.000	2.937	0.00	0.00	696.887	696.766	696.766
CIRC. KV -18339	181020.000	357546.025	4612412.035	92000.000	696.889	696.889	31.545103	0.000	2.907	0.00	0.00	696.889	696.765	696.765
CIRC. KV -18339	181040.000	357555.536	4612429.628	92000.000	696.936	696.936	31.558943	0.000	1.816	0.00	0.00	696.936	696.747	696.747
CLOT. KV -18339	181050.041	357560.313	4612438.460	92000.000	696.951	696.951	31.565891	0.000	1.268	0.00	0.00	696.951	696.738	696.738
CLOT. KV -18339	181060.000	357565.051	4612447.220	183245.176	696.961	696.961	31.571067	0.000	0.725	0.00	0.00	696.961	696.734	696.734
RECTA KV -18339	181070.041	357569.830	4612456.051	0.000	696.966	696.966	31.572811	0.000	0.178	0.00	0.00	696.966	696.761	696.761
RECTA KV -18339	181080.000	357574.569	4612464.810	0.000	696.965	696.965	31.572811	0.000	-0.365	0.00	0.00	696.965	696.734	696.734
RECTA KV -18339	181100.000	357584.086	4612482.401	0.000	696.947	696.947	31.572811	0.000	-1.456	0.00	0.00	696.947	696.760	696.760
RECTA Pendiente	181120.000	357593.603	4612499.991	0.000	696.915	696.915	31.572811	0.000	-1.567	0.00	0.00	696.915	696.771	696.771
RECTA Pendiente	181140.000	357603.120	4612517.581	0.000	696.884	696.884	31.572811	0.000	-1.567	0.00	0.00	696.884	696.798	696.798
CLOT. Pendiente	181151.048	357608.378	4612527.299	-1000000.000	696.867	696.867	31.572811	0.000	-1.567	0.00	0.00	696.867	696.790	696.790
CLOT. Pendiente	181160.000	357612.638	4612535.172	-397695.856	696.853	696.853	31.572095	0.000	-1.567	0.00	0.00	696.853	696.853	696.853
CIRC. Pendiente	181171.048	357617.895	4612544.889	-178000.000	696.835	696.835	31.569235	0.000	-1.567	0.00	0.00	696.835	696.824	696.824
CIRC. Pendiente	181180.000	357622.154	4612552.763	-178000.000	696.821	696.821	31.566033	0.000	-1.567	0.00	0.00	696.821	696.791	696.791
CIRC. Pendiente	181200.000	357631.668	4612570.355	-178000.000	696.790	696.790	31.558880	0.000	-1.567	0.00	0.00	696.790	696.785	696.785
CLOT. KV 47094	181210.329	357636.581	4612579.441	-178000.000	696.774	696.774	31.555186	0.000	-1.511	0.00	0.00	696.774	696.783	696.783
CLOT. KV 47094	181220.000	357641.181	4612587.948	-344644.766	696.760	696.760	31.552563	0.000	-1.306	0.00	0.00	696.760	696.781	696.781
RECTA KV 47094	181230.329	357646.093	4612597.034	0.000	696.748	696.748	31.551609	0.000	-1.087	0.00	0.00	696.748	696.796	696.796
RECTA KV 47094	181240.000	357650.692	4612605.541	0.000	696.738	696.738	31.551609	0.000	-0.881	0.00	0.00	696.738	696.808	696.808
RECTA KV 47094	181260.000	357660.204	4612623.135	0.000	696.725	696.725	31.551609	0.000	-0.457	0.00	0.00	696.725	696.796	696.796
CLOT. KV 47094	181274.372	357667.039	4612635.778	1000000.000	696.721	696.721	31.551609	0.000	-0.152	0.00	0.00	696.721	696.805	696.805
CLOT. KV 47094	181280.000	357669.715	4612640.728	1000000.000	696.720	696.720	31.551624	0.000	-0.032	0.00	0.00	696.720	696.809	696.809
CLOT. KV 47094	181300.000	357679.226	4612658.322	1000000.000	696.724	696.724	31.551908	0.000	0.393	0.00	0.00	696.724	696.764	696.764
CLOT. KV 47094	181320.000	357688.738	4612675.915	1000000.000	696.736	696.736	31.552556	0.000	0.817	0.00	0.00	696.736	696.882	696.882
CIRC. KV 47094	181324.372	357690.817	4612679.762	1400000.000	696.740	696.740	31.552746	0.000	0.910	0.00	0.00	696.740	696.884	696.884
CIRC. Rampa	181340.000	357698.250	4612693.509	1400000.000	696.755	696.755	31.553457	0.000	0.981	0.00	0.00	696.755	696.843	696.843
CIRC. Rampa	181360.000	357707.762	4612711.102	1400000.000	696.775	696.775	31.554366	0.000	0.981	0.00	0.00	696.775	696.838	696.838
CIRC. Rampa	181380.000	357717.274	4612728.695	1400000.000	696.794	696.794	31.555275	0.000	0.981	0.00	0.00	696.794	696.894	696.894
CIRC. Rampa	181400.000	357726.787	4612746.288	1400000.000	696.814	696.814	31.556185	0.000	0.981	0.00	0.00	696.814	696.855	696.855
CIRC. Rampa	181420.000	357736.299	4612763.881	1400000.000	696.833	696.833	31.557094	0.000	0.981	0.00	0.00	696.833	696.871	696.871
CIRC. Rampa	181440.000	357745.812	4612781.473	1400000.000	696.853	696.853	31.558004	0.000	0.981	0.00	0.00	696.853	696.904	696.904
CIRC. Rampa	181460.000	357755.326	4612799.066	1400000.000	696.873	696.873	31.558913	0.000	0.981	0.00	0.00	696.873	696.857	696.857

Istram 20.08.08.26 11/02/21 09:46:31 200009 pagina 9

PROYECTO : ESTUDIO INFORMATIVO DE LA INTEGRACION DEL FFCC EN VALLADOLID
GRUPO : 1 : ALTERNATIVA 1
EJE : 1 : VIA 1 UIC

* * * PUNTOS DEL EJE EN PLANTA * * *

TIPO	P.K.	X	Y	RADIO	Z RAS IZ.	Z RAS DR.	AZIMUT	DIST. EJE	PEN(o/oo)	PERAL_I	PERAL_D	HILO BAJO	ZT (eje)	Z TERR.
CIRC. Rampa	181480.000	357764.839	4612816.658	1400000.000	696.892	696.892	31.559823	0.000	0.981	0.00	0.00	696.892	696.935	696.935
CIRC. Rampa	181500.000	357774.353	4612834.251	1400000.000	696.912	696.912	31.560732	0.000	0.981	0.00	0.00	696.912	696.917	696.917
CIRC. Rampa	181520.000	357783.867	4612851.843	1400000.000	696.931	696.931	31.561642	0.000	0.981	0.00	0.00	696.931	696.844	696.844
CIRC. Rampa	181540.000	357793.381	4612869.435	1400000.000	696.951	696.951	31.562551	0.000	0.981	0.00	0.00	696.951	696.900	696.900
CIRC. KV -86723	181560.000	357802.896	4612887.027	1400000.000	696.970	696.970	31.563461	0.000	0.911	0.00	0.00	696.970	696.839	696.839
CIRC. KV -86723	181580.000	357812.411	4612904.618	1400000.000	696.986	696.986	31.564370	0.000	0.681	0.00	0.00	696.986	696.753	696.753
CIRC. KV -86723	181600.000	357821.926	4612922.210	1400000.000	696.998	696.998	31.565280	0.000	0.450	0.00	0.00	696.998	696.750	696.750
CIRC. KV -86723	181620.000	357831.441	4612939.801	1400000.000	697.004	697.004	31.566189	0.000	0.220	0.00	0.00	697.004	696.800	696.800
CIRC. KV -86723	181640.000	357840.957	4612957.393	1400000.000	697.006	697.006	31.567098	0.000	-0.011	0.00	0.00	697.006	696.850	696.850
CIRC. KV -86723	181660.000	357850.472	4612974.984	1400000.000	697.004	697.004	31.568008	0.000	-0.242	0.00	0.00	697.004	696.728	696.728
CIRC. KV -86723	181680.000	357859.988	4612992.575	1400000.000	696.997	696.997	31.568917	0.000	-0.472	0.00	0.00	696.997	696.865	696.865
CIRC. Pendiente	181700.000	357869.505	4613010.166	1400000.000	696.986	696.986	31.569827	0.000	-0.553	0.00	0.00	696.986	696.890	696.890
CIRC. Pendiente	181720.000	357879.021	4613027.757	1400000.000	696.975	696.975	31.570736	0.000	-0.553	0.00	0.00	696.975	696.911	696.911
CIRC. Pendiente	181740.000	357888.538	4613045.347	1400000.000	696.964	696.964	31.571646	0.000	-0.553	0.00	0.00	696.964	696.910	696.910
CIRC. Pendiente	181760.000	357898.055	4613062.938	1400000.000	696.953	696.953	31.572555	0.000	-0.553	0.00	0.00	696.953	696.896	696.896
CIRC. Pendiente	181780.000	357907.572	4613080.528	1400000.000	696.942	696.942	31.573465	0.000	-0.553	0.00	0.00	696.942	696.882	696.882
CIRC. Pendiente	181800.000	357917.090	4613098.118	1400000.000	696.931	696.931	31.574374	0.000	-0.553	0.00	0.00	696.931	696.854	696.854
CIRC. Pendiente	181820.000	357926.608	4613115.708	1400000.000	696.920	696.920	31.575284	0.000	-0.553	0.00	0.00	696.920	696.780	696.780
CIRC. Pendiente	181840.000	357936.126	4613133.298	1400000.000	696.909	696.909	31.576193	0.000	-0.553	0.00	0.00	696.909	696.766	696.766
CIRC. KV 354391	181860.000	357945.644	4613150.888	1400000.000	696.898	696.898	31.577102	0.000	-0.509	0.00	0.00	696.898	696.823	696.823
CIRC. KV 354391	181880.000	357955.163	4613168.478	1400000.000	696.888	696.888	31.578012	0.000	-0.452	0.00	0.00	696.888	696.795	696.795
CIRC. KV 354391	181900.000	357964.682	4613186.067	1400000.000	696.880	696.880	31.578921	0.000	-0.396	0.00	0.00	696.880	696.756	696.756
CIRC. KV 354391	181920.000	357974.201	4613203.657	1400000.000	696.872	696.872	31.579831	0.000	-0.339	0.00	0.00	696.872	696.690	696.690
CIRC. KV 354391	181940.000	357983.720	4613221.246	1400000.000	696.866	696.866	31.580740	0.000	-0.283	0.00	0.00	696.866	696.607	696.607
CIRC. KV 354391	181960.000	357993.240	4613238.835	1400000.000	696.861	696.861	31.581650	0.000	-0.226	0.00	0.00	696.861	696.653	696.653
CIRC. Pendiente	181980.000	358002.759	4613256.424	1400000.000	696.857	696.857	31.582559	0.000	-0.178	0.00	0.00	696.857	696.706	696.706
CIRC. Pendiente	182000.000	358012.279	4613274.013	1400000.000	696.854	696.854	31.583469	0.000	-0.178	0.00	0.00	696.854	696.756	696.756
CIRC. Pendiente	182020.000	358021.800	4613291.602	1400000.000	696.850	696.850	31.584378	0.000	-0.178	0.00	0.00	696.850	696.750	696.750
CIRC. Pendiente	182040.000	358031.320	4613309.190	1400000.000	696.847	696.847	31.585288	0.000	-0.178	0.00	0.00	696.847	696.704	696.704
CIRC. Pendiente	182060.000	358040.841	4613326.779	1400000.000	696.843	696.843	31.586197	0.000	-0.178	0.00	0.00	696.843	696.732	696.732
CIRC. Pendiente	182080.000	358050.362	4613344.367	1400000.000	696.839	696.839	31.587106	0.000	-0.178	0.00	0.00	696.839	696.703	696.703
CIRC. Pendiente	182100.000	358059.884	4613361.955	1400000.000	696.836	696.836	31.588016	0.000	-0.178	0.00	0.00	696.836	696.678	696.678
CIRC. Pendiente	182120.000	358069.405	4613379.543	1400000.000	696.832	696.832	31.588925	0.000	-0.178	0.00	0.00	696.832	696.722	696.722
CLOT. Pendiente	182125.515	358072.031	4613384.393	1000000.000	696.831	696.831	31.589176	0.000	-0.178	0.00	0.00	696.831	696.735	696.735
CLOT. Pendiente	182140.000	358078.927	4613397.131	1000000.000	696.829	696.829	31.589739	0.000	-0.178	0.00	0.00	696.829	696.763	696.763
CLOT. Pendiente	182160.000	358088.449	4613414.719	1000000.000	696.825	696.825	31.590204	0.000	-0.178	0.00	0.00	696.825	696.772	696.772
RECTA Pendiente	182175.515	358095.836	4613428.363	0.000	696.822	696.822	31.590313	0.000	-0.178	0.00	0.00	696.822	696.773	696.773
RECTA Pendiente	182180.000	358097.971	4613432.307	0.000	696.822	696.822	31.590313	0.000	-0.178	0.00	0.00	696.822	696.763	696.763
RECTA Pendiente	182200.000	358107.493	4613449.895	0.000	696.818	696.818	31.590313	0.000	-0.178	0.00	0.00	696.818	696.702	696.702
RECTA Pendiente	182220.000	358117.015	4613467.482	0.000	696.815	696.815	31.590313	0.000	-0.178	0.00	0.00	696.815	696.771	696.771
RECTA Pendiente	182240.000	358126.537	4613485.070	0.000	696.811	696.811	31.590313	0.000	-0.178	0.00	0.00	696.811	696.769	696.769
RECTA Pendiente	182260.000	358136.059	4613502.658	0.000	696.807	696.807	31.590313	0.000	-0.178	0.00	0.00	696.807	696.656	696.656
RECTA Pendiente	182280.000	358145.581	4613520.246	0.000	696.804	696.804	31.590313	0.000	-0.178	0.00	0.00	696.804	696.702	696.702
RECTA Pendiente	182300.000	358155.104	4613537.834	0.000	696.800	696.800	31.590313	0.000	-0.178	0.00	0.00	696.800	696.769	696.769
RECTA Pendiente	182320.000	358164.626	4613555.421	0.000	696.797	696.797	31.590313	0.000	-0.178	0.00	0.00	696.797	696.746	696.746
RECTA Pendiente	182340.000	358174.148	4613573.009	0.000	696.793	696.793	31.590313	0.000	-0.178	0.00	0.00	696.793	696.727	696.727
RECTA Pendiente	182360.000	358183.670	4613590.597	0.000	696.790	696.790	31.590313	0.000	-0.178	0.00	0.00	696.790	696.747	696.747
RECTA Pendiente	182380.000	358193.192	4613608.185	0.000	696.786	696.786	31.590313	0.000	-0.178	0.00	0.00	696.786	696.685	696.685
RECTA Pendiente	182400.000	358202.714	4613625.772	0.000	696.783	696.783	31.590313	0.000	-0.178	0.00	0.00	696.783	696.663	696.663
RECTA Pendiente	182420.000	358212.236	4613643.360	0.000	696.779	696.779	31.590313	0.000	-0.178	0.00	0.00	696.779	696.651	696.651

Istram 20.08.08.26 11/02/21 09:46:31 200009 pagina 10

PROYECTO : ESTUDIO INFORMATIVO DE LA INTEGRACION DEL FFCC EN VALLADOLID
GRUPO : 1 : ALTERNATIVA 1
EJE : 1 : VIA 1 UIC

* * * PUNTOS DEL EJE EN PLANTA * * *

TIPO	P.K.	X	Y	RADIO	Z RAS IZ.	Z RAS DR.	AZIMUT	DIST. EJE	PEN(o/oo)	PERAL_I	PERAL_D	HILO BAJO	ZT (eje)	Z TERR.
RECTA Pendiente	182440.000	358221.758	4613660.948	0.000	696.776	696.776	31.590313	0.000	-0.178	0.00	0.00	696.776	696.678	696.678
RECTA Pendiente	182460.000	358231.280	4613678.536	0.000	696.772	696.772	31.590313	0.000	-0.178	0.00	0.00	696.772	696.734	696.734
RECTA Pendiente	182480.000	358240.802	4613696.124	0.000	696.768	696.768	31.590313	0.000	-0.178	0.00	0.00	696.768	696.733	696.733
CLOT. Pendiente	182498.372	358249.549	4613712.280	-1000000.000	696.765	696.765	31.590313	0.000	-0.178	0.00	0.00	696.765	696.786	696.786
CLOT. Pendiente	182500.000	358250.324	4613713.711	-1000000.000	696.765	696.765	31.590291	0.000	-0.178	0.00	0.00	696.765	696.791	696.791
CLOT. Pendiente	182520.000	358259.846	4613731.299	-173387.425	696.761	696.761	31.586342	0.000	-0.178	0.00	0.00	696.761	696.730	696.730
CIRC. Pendiente	182523.372	358261.451	4613734.265	-150000.000	696.761	696.761	31.585008	0.000	-0.178	0.00	0.00	696.761	696.742	696.742
CIRC. Pendiente	182540.000	358269.366	4613748.888	-150000.000	696.758	696.758	31.577951	0.000	-0.178	0.00	0.00	696.758	696.800	696.800
CIRC. Pendiente	182560.000	358278.883	4613766.479	-150000.000	696.754	696.754	31.569462	0.000	-0.178	0.00	0.00	696.754	696.719	696.719
CIRC. Pendiente	182580.000	358288.399	4613784.070	-150000.000	696.751	696.751	31.560974	0.000	-0.178	0.00	0.00	696.751	696.807	696.807
CIRC. Pendiente	182600.000	358297.911	4613801.663	-150000.000	696.747	696.747	31.552486	0.000	-0.178	0.00	0.00	696.747	696.855	696.855
CIRC. Pendiente	182620.000	358307.422	4613819.257	-150000.000	696.744	696.744	31.543998	0.000	-0.178	0.00	0.00	696.744	696.838	696.838
CIRC. Pendiente	182640.000	358316.930	4613836.852	-150000.000	696.740	696.740	31.535509	0.000	-0.178	0.00	0.00	696.740	696.801	696.801
CLOT. Pendiente	182645.536	358319.561	4613841.723	-150000.000	696.739	696.739	31.533160	0.000	-0.178	0.00	0.00	696.739	696.778	696.778
CLOT. Pendiente	182660.000	358326.436	4613854.449	-355923.187	696.736	696.736	31.528797	0.000	-0.178	0.00	0.00	696.736	696.788	696.788
CLOT. Pendiente	182670.536	358331.443	4613863.719	1000000.000	696.735	696.735	31.527855	0.000	-0.178	0.00	0.00	696.735	696.818	696.818
CLOT. Pendiente	182680.000	358335.941	4613872.046	409445.508	696.733	696.733	31.528590	0.000	-0.178	0.00	0.00	696.733	696.838	696.838
CIRC. KV 218893	182695.536	358343.325	4613885.715	155000.000	696.730	696.730	31.532989	0.000	-0.134	0.00	0.00	696.730	696.783	696.783
CIRC. KV 218893	182700.000	358345.447	4613889.642	155000.000	696.730	696.730	31.534822	0.000	-0.114	0.00	0.00	696.730	696.769	696.769
CIRC. KV 218893	182720.000	358354.954	4613907.238	155000.000	696.728	696.728	31.543037	0.000	-0.022	0.00	0.00	696.728	696.750	696.750
CIRC. KV 218893	182740.000	358364.465	4613924.832	155000.000	696.729	696.729	31.551251	0.000	0.069	0.00	0.00	696.729	704.340	704.340
CIRC. KV 218893	182760.000	358373.977	4613942.425	155000.000	696.731	696.731	31.559466	0.000	0.160	0.00	0.00	696.731	703.451	703.451
CIRC. KV 218893	182780.000	358383.492	4613960.017	155000.000	696.735	696.735	31.567680	0.000	0.252	0.00	0.00	696.735	696.633	696.633
CLOT. KV 218893	182787.777	358387.192	4613966.857	155000.000	696.737	696.737	31.570874	0.000	0.287	0.00	0.00	696.737	696.628	696.628
CLOT. KV 218893	182800.000	358393.009	4613977.607	303287.010	696.741	696.741	31.574667	0.000	0.343	0.00	0.00	696.741	696.623	696.623
RECTA KV 218893	182812.777	358399.089	4613988.845	0.000	696.746	696.746	31.576008	0.000	0.401	0.00	0.00	696.746	696.645	696.645
RECTA Rampa	182820.000	358402.527	4613995.197	0.000	696.749	696.749	31.576008	0.000	0.430	0.00	0.00	696.749	696.659	696.659
RECTA Rampa	182840.000	358412.045	4614012.787	0.000	696.758	696.758	31.576008	0.000	0.430	0.00	0.00	696.758	696.643	696.643
RECTA Rampa	182860.000	358421.563	4614030.377	0.000	696.766	696.766	31.576008	0.000	0.430	0.00	0.00	696.766	696.643	696.643
RECTA Rampa	182880.000	358431.081	4614047.967	0.000	696.775	696.775	31.576008	0.000	0.430	0.00	0.00	696.775	696.660	696.660
RECTA Rampa	182900.000	358440.599	4614065.557	0.000	696.783	696.783	31.576008	0.000	0.430	0.00	0.00	696.783	696.680	696.680
RECTA Rampa	182920.000	358450.117	4614083.147	0.000	696.792	696.792	31.576008	0.000	0.430	0.00	0.00	696.792	696.680	696.680
RECTA Rampa	182940.000	358459.636	4614100.737	0.000	696.801	696.801	31.576008	0.000	0.430	0.00	0.00	696.801	696.680	696.680
RECTA Rampa	182960.000	358469.154	4614118.327	0.000	696.809	696.809	31.576008	0.000	0.430	0.00	0.00	696.809	696.683	696.683
RECTA Rampa	182980.000	358478.672	4614135.917	0.000	696.818	696.818	31.576008	0.000	0.430	0.00	0.00	696.818	696.700	696.700
RECTA Rampa	183000.000	358488.190	4614153.507	0.000	696.826	696.826	31.576008	0.000	0.430	0.00	0.00	696.826	696.700	696.700
RECTA Rampa	183020.000	358497.708	4614171.097	0.000	696.835	696.835	31.576008	0.000	0.430	0.00	0.00	696.835	696.720	696.720
RECTA KV -3358409	183040.000	358507.226	4614188.687	0.000	696.844	696.844	31.576008	0.000	0.430	0.00	0.00	696.844	696.720	696.720
RECTA KV -3358409	183060.000	358516.744	4614206.276	0.000	696.852	696.852	31.576008	0.000	0.424	0.00	0.00	696.852	696.720	696.720
RECTA KV -3358409	183080.000	358526.262	4614223.866	0.000	696.861	696.861	31.576008	0.000	0.418	0.00	0.00	696.861	696.720	696.720
RECTA KV -3358409	183100.000	358535.781	4614241.456	0.000	696.869	696.869	31.576008	0.000	0.412	0.00	0.00	696.869	696.720	696.720
RECTA KV -3358409	183120.000	358545.299	4614259.046	0.000	696.877	696.877	31.576008	0.000	0.406	0.00	0.00	696.877	696.720	696.720
RECTA KV -3358409	183140.000	358554.817	4614276.636	0.000	696.885	696.885	31.576008	0.000	0.400	0.00	0.00	696.885	696.720	696.720
RECTA KV -3358409	183160.000	358564.335	4614294.226	0.000	696.893	696.893	31.576008	0.000	0.394	0.00	0.00	696.893	696.720	696.720
RECTA Rampa	183180.000	358573.853	4614311.816	0.000	696.901	696.901	31.576008	0.000	0.390	0.00	0.00	696.901	696.721	696.721
RECTA Rampa	183200.000	358583.371	4614329.406	0.000	696.909	696.909	31.576008	0.000	0.390	0.00	0.00	696.909	696.725	696.725
RECTA Rampa	183220.000	358592.889	4614346.996	0.000	696.916	696.916	31.576008	0.000	0.390	0.00	0.00	696.916	696.725	696.725
RECTA Rampa	183240.000	358602.408	4614364.586	0.000	696.924	696.924	31.576008	0.000	0.390	0.00	0.00	696.924	696.726	696.726
RECTA Rampa	183260.000	358611.926	4614382.176	0.000	696.932	696.932	31.576008	0.000	0.390	0.00	0.00	696.932	696.730	696.730
RECTA Rampa	183280.000	358621.444	4614399.765	0.000	696.940	696.940	31.576008	0.000	0.390	0.00	0.00	696.940	696.726	696.726

Istram 20.08.08.26 11/02/21 09:46:31 200009 pagina 11

PROYECTO : ESTUDIO INFORMATIVO DE LA INTEGRACION DEL FFCC EN VALLADOLID
GRUPO : 1 : ALTERNATIVA 1
EJE : 1 : VIA 1 UIC

* * * PUNTOS DEL EJE EN PLANTA * * *

TIPO	P.K.	X	Y	RADIO	Z RAS IZ.	Z RAS DR.	AZIMUT	DIST. EJE	PEN(o/oo)	PERAL_I	PERAL_D	HILO BAJO	ZT (eje)	Z TERR.
RECTA Rampa	183300.000	358630.962	4614417.355	0.000	696.948	696.948	31.576008	0.000	0.390	0.00	0.00	696.948	696.721	696.721
RECTA Rampa	183320.000	358640.480	4614434.945	0.000	696.956	696.956	31.576008	0.000	0.390	0.00	0.00	696.956	696.727	696.727
RECTA Rampa	183340.000	358649.998	4614452.535	0.000	696.963	696.963	31.576008	0.000	0.390	0.00	0.00	696.963	696.726	696.726
RECTA Rampa	183360.000	358659.516	4614470.125	0.000	696.971	696.971	31.576008	0.000	0.390	0.00	0.00	696.971	696.724	696.724
RECTA Rampa	183380.000	358669.035	4614487.715	0.000	696.979	696.979	31.576008	0.000	0.390	0.00	0.00	696.979	696.720	696.720
RECTA Rampa	183400.000	358678.553	4614505.305	0.000	696.987	696.987	31.576008	0.000	0.390	0.00	0.00	696.987	696.720	696.720
CLOT. Rampa	183400.829	358678.947	4614506.034	1000000.000	696.987	696.987	31.576008	0.000	0.390	0.00	0.00	696.987	696.725	696.725
CLOT. Rampa	183420.000	358688.071	4614522.895	1000000.000	696.995	696.995	31.576301	0.000	0.390	0.00	0.00	696.995	696.775	696.775
CLOT. Rampa	183440.000	358697.589	4614540.485	1000000.000	697.002	697.002	31.577229	0.000	0.390	0.00	0.00	697.002	696.773	696.773
CIRC. Rampa	183440.829	358697.984	4614541.214	1000000.000	697.003	697.003	31.577281	0.000	0.390	0.00	0.00	697.003	696.774	696.774
CIRC. Rampa	183460.000	358707.108	4614558.074	1000000.000	697.010	697.010	31.578502	0.000	0.390	0.00	0.00	697.010	696.802	696.802
CIRC. Rampa	183480.000	358716.627	4614575.664	1000000.000	697.018	697.018	31.579775	0.000	0.390	0.00	0.00	697.018	696.842	696.842
CIRC. Rampa	183500.000	358726.146	4614593.253	1000000.000	697.026	697.026	31.581048	0.000	0.390	0.00	0.00	697.026	696.844	696.844
CIRC. Rampa	183520.000	358735.666	4614610.842	1000000.000	697.034	697.034	31.582322	0.000	0.390	0.00	0.00	697.034	696.861	696.861
CIRC. Rampa	183540.000	358745.186	4614628.431	1000000.000	697.041	697.041	31.583595	0.000	0.390	0.00	0.00	697.041	696.868	696.868
CIRC. Rampa	183560.000	358754.706	4614646.020	1000000.000	697.049	697.049	31.584868	0.000	0.390	0.00	0.00	697.049	696.878	696.878
CIRC. Rampa	183580.000	358764.227	4614663.608	1000000.000	697.057	697.057	31.586141	0.000	0.390	0.00	0.00	697.057	696.890	696.890
CIRC. Rampa	183600.000	358773.748	4614681.196	1000000.000	697.065	697.065	31.587415	0.000	0.390	0.00	0.00	697.065	696.903	696.903
CLOT. Rampa	183600.237	358773.861	4614681.405	1000000.000	697.065	697.065	31.587430	0.000	0.390	0.00	0.00	697.065	696.903	696.903
CLOT. Rampa	183620.000	358783.270	4614698.785	1000000.000	697.073	697.073	31.588377	0.000	0.390	0.00	0.00	697.073	696.904	696.904
CLOT. Rampa	183640.000	358792.791	4614716.373	1000000.000	697.080	697.080	31.588703	0.000	0.390	0.00	0.00	697.080	696.920	696.920
RECTA Rampa	183640.237	358792.904	4614716.581	0.000	697.081	697.081	31.588703	0.000	0.390	0.00	0.00	697.081	696.920	696.920
RECTA Rampa	183660.000	358802.313	4614733.961	0.000	697.088	697.088	31.588703	0.000	0.390	0.00	0.00	697.088	696.919	696.919
RECTA Rampa	183680.000	358811.835	4614751.549	0.000	697.096	697.096	31.588703	0.000	0.390	0.00	0.00	697.096	696.883	696.883
RECTA Rampa	183700.000	358821.356	4614769.137	0.000	697.104	697.104	31.588703	0.000	0.390	0.00	0.00	697.104	696.882	696.882
RECTA Rampa	183720.000	358830.878	4614786.725	0.000	697.112	697.112	31.588703	0.000	0.390	0.00	0.00	697.112	696.841	696.841
RECTA Rampa	183740.000	358840.399	4614804.313	0.000	697.119	697.119	31.588703	0.000	0.390	0.00	0.00	697.119	696.858	696.858
RECTA Rampa	183760.000	358849.921	4614821.901	0.000	697.127	697.127	31.588703	0.000	0.390	0.00	0.00	697.127	696.899	696.899
RECTA Rampa	183780.000	358859.443	4614839.489	0.000	697.135	697.135	31.588703	0.000	0.390	0.00	0.00	697.135	696.929	696.929
RECTA Rampa	183800.000	358868.964	4614857.077	0.000	697.143	697.143	31.588703	0.000	0.390	0.00	0.00	697.143	696.950	696.950
RECTA Rampa	183820.000	358878.486	4614874.665	0.000	697.151	697.151	31.588703	0.000	0.390	0.00	0.00	697.151	696.950	696.950
RECTA Rampa	183840.000	358888.008	4614892.253	0.000	697.159	697.159	31.588703	0.000	0.390	0.00	0.00	697.159	696.953	696.953
RECTA Rampa	183860.000	358897.529	4614909.841	0.000	697.166	697.166	31.588703	0.000	0.390	0.00	0.00	697.166	696.975	696.975
RECTA Rampa	183880.000	358907.051	4614927.429	0.000	697.174	697.174	31.588703	0.000	0.390	0.00	0.00	697.174	696.977	696.977
RECTA Rampa	183900.000	358916.573	4614945.017	0.000	697.182	697.182	31.588703	0.000	0.390	0.00	0.00	697.182	697.010	697.010
RECTA Rampa	183920.000	358926.094	4614962.605	0.000	697.190	697.190	31.588703	0.000	0.390	0.00	0.00	697.190	697.044	697.044
RECTA Rampa	183940.000	358935.616	4614980.193	0.000	697.198	697.198	31.588703	0.000	0.390	0.00	0.00	697.198	697.076	697.076
RECTA Rampa	183960.000	358945.138	4614997.781	0.000	697.205	697.205	31.588703	0.000	0.390	0.00	0.00	697.205	697.084	697.084
RECTA Rampa	183980.000	358954.659	4615015.369	0.000	697.213	697.213	31.588703	0.000	0.390	0.00	0.00	697.213	697.100	697.100
RECTA Rampa	184000.000	358964.181	4615032.957	0.000	697.221	697.221	31.588703	0.000	0.390	0.00	0.00	697.221	697.100	697.100
RECTA Rampa	184020.000	358973.702	4615050.545	0.000	697.229	697.229	31.588703	0.000	0.390	0.00	0.00	697.229	697.100	697.100
RECTA Rampa	184040.000	358983.224	4615068.133	0.000	697.237	697.237	31.588703	0.000	0.390	0.00	0.00	697.237	697.100	697.100
RECTA Rampa	184060.000	358992.746	4615085.721	0.000	697.244	697.244	31.588703	0.000	0.390	0.00	0.00	697.244	697.100	697.100
RECTA Rampa	184080.000	359002.267	4615103.309	0.000	697.252	697.252	31.588703	0.000	0.390	0.00	0.00	697.252	697.100	697.100
RECTA Rampa	184100.000	359011.789	4615120.897	0.000	697.260	697.260	31.588703	0.000	0.390	0.00	0.00	697.260	697.100	697.100
RECTA Rampa	184120.000	359021.311	4615138.485	0.000	697.268	697.268	31.588703	0.000	0.390	0.00	0.00	697.268	697.100	697.100
RECTA Rampa	184140.000	359030.832	4615156.073	0.000	697.276	697.276	31.588703	0.000	0.390	0.00	0.00	697.276	697.100	697.100
RECTA Rampa	184160.000	359040.354	4615173.661	0.000	697.283	697.283	31.588703	0.000	0.390	0.00	0.00	697.283	697.100	697.100
RECTA Rampa	184180.000	359049.876	4615191.249	0.000	697.291	697.291	31.588703	0.000	0.390	0.00	0.00	697.291	697.100	697.100
RECTA Rampa	184200.000	359059.397	4615208.837	0.000	697.299	697.299	31.588703	0.000	0.390	0.00	0.00	697.299	697.100	697.100

Istram 20.08.08.26 11/02/21 09:46:32 200009 pagina 12

PROYECTO : ESTUDIO INFORMATIVO DE LA INTEGRACION DEL FFCC EN VALLADOLID
GRUPO : 1 : ALTERNATIVA 1
EJE : 1 : VIA 1 UIC

* * * PUNTOS DEL EJE EN PLANTA * * *

TIPO	P.K.	X	Y	RADIO	Z RAS IZ.	Z RAS DR.	AZIMUT	DIST. EJE	PEN(o/oo)	PERAL_I	PERAL_D	HILO BAJO	ZT (eje)	Z TERR.
RECTA Rampa	184220.000	359068.919	4615226.425	0.000	697.307	697.307	31.588703	0.000	0.390	0.00	0.00	697.307	697.100	697.100
RECTA Rampa	184240.000	359078.441	4615244.013	0.000	697.315	697.315	31.588703	0.000	0.390	0.00	0.00	697.315	697.100	697.100
RECTA KV -461071	184260.000	359087.962	4615261.601	0.000	697.322	697.322	31.588703	0.000	0.348	0.00	0.00	697.322	697.100	697.100
RECTA KV -461071	184280.000	359097.484	4615279.189	0.000	697.329	697.329	31.588703	0.000	0.305	0.00	0.00	697.329	697.112	697.112
RECTA KV -461071	184300.000	359107.005	4615296.777	0.000	697.334	697.334	31.588703	0.000	0.261	0.00	0.00	697.334	697.126	697.126
RECTA KV -461071	184320.000	359116.527	4615314.365	0.000	697.339	697.339	31.588703	0.000	0.218	0.00	0.00	697.339	697.142	697.142
RECTA KV -461071	184340.000	359126.049	4615331.953	0.000	697.343	697.343	31.588703	0.000	0.175	0.00	0.00	697.343	697.148	697.148
RECTA KV -461071	184360.000	359135.570	4615349.541	0.000	697.346	697.346	31.588703	0.000	0.131	0.00	0.00	697.346	697.145	697.145
RECTA KV -461071	184380.000	359145.092	4615367.129	0.000	697.348	697.348	31.588703	0.000	0.088	0.00	0.00	697.348	697.142	697.142
RECTA KV -461071	184400.000	359154.614	4615384.717	0.000	697.350	697.350	31.588703	0.000	0.044	0.00	0.00	697.350	697.138	697.138
RECTA KV -461071	184420.000	359164.135	4615402.305	0.000	697.350	697.350	31.588703	0.000	0.001	0.00	0.00	697.350	697.134	697.134
RECTA Horizontal	184440.000	359173.657	4615419.893	0.000	697.350	697.350	31.588703	0.000	0.000	0.00	0.00	697.350	697.130	697.130
RECTA Horizontal	184460.000	359183.179	4615437.481	0.000	697.350	697.350	31.588703	0.000	0.000	0.00	0.00	697.350	697.120	697.120
RECTA Horizontal	184480.000	359192.700	4615455.069	0.000	697.350	697.350	31.588703	0.000	0.000	0.00	0.00	697.350	697.110	697.110
RECTA Horizontal	184500.000	359202.222	4615472.657	0.000	697.350	697.350	31.588703	0.000	0.000	0.00	0.00	697.350	697.110	697.110
RECTA Horizontal	184520.000	359211.744	4615490.245	0.000	697.350	697.350	31.588703	0.000	0.000	0.00	0.00	697.350	697.110	697.110
RECTA Horizontal	184540.000	359221.265	4615507.833	0.000	697.350	697.350	31.588703	0.000	0.000	0.00	0.00	697.350	697.110	697.110
RECTA Horizontal	184560.000	359230.787	4615525.421	0.000	697.350	697.350	31.588703	0.000	0.000	0.00	0.00	697.350	697.110	697.110
RECTA Horizontal	184580.000	359240.308	4615543.009	0.000	697.350	697.350	31.588703	0.000	0.000	0.00	0.00	697.350	697.110	697.110
RECTA Horizontal	184600.000	359249.830	4615560.597	0.000	697.350	697.350	31.588703	0.000	0.000	0.00	0.00	697.350	697.112	697.112
RECTA Horizontal	184620.000	359259.352	4615578.185	0.000	697.350	697.350	31.588703	0.000	0.000	0.00	0.00	697.350	697.126	697.126
RECTA Horizontal	184640.000	359268.873	4615595.773	0.000	697.350	697.350	31.588703	0.000	0.000	0.00	0.00	697.350	697.140	697.140
RECTA Horizontal	184660.000	359278.395	4615613.361	0.000	697.350	697.350	31.588703	0.000	0.000	0.00	0.00	697.350	697.149	697.149
RECTA KV 133923	184680.000	359287.917	4615630.949	0.000	697.350	697.350	31.588703	0.000	0.071	0.00	0.00	697.350	697.178	697.178
RECTA KV 133923	184700.000	359297.438	4615648.537	0.000	697.353	697.353	31.588703	0.000	0.220	0.00	0.00	697.353	697.192	697.192
RECTA KV 133923	184720.000	359306.960	4615666.125	0.000	697.359	697.359	31.588703	0.000	0.370	0.00	0.00	697.359	697.217	697.217
RECTA KV 133923	184740.000	359316.482	4615683.713	0.000	697.368	697.368	31.588703	0.000	0.519	0.00	0.00	697.368	697.246	697.246
RECTA KV 133923	184760.000	359326.003	4615701.302	0.000	697.380	697.380	31.588703	0.000	0.668	0.00	0.00	697.380	698.292	698.292
RECTA KV 133923	184780.000	359335.525	4615718.890	0.000	697.395	697.395	31.588703	0.000	0.818	0.00	0.00	697.395	699.158	699.158
RECTA KV 133923	184800.000	359345.047	4615736.478	0.000	697.413	697.413	31.588703	0.000	0.967	0.00	0.00	697.413	697.382	697.382
CLOT. KV 133923	184806.119	359347.960	4615741.859	-1000000.000	697.419	697.419	31.588703	0.000	1.013	0.00	0.00	697.419	697.390	697.390
CLOT. KV 133923	184820.000	359354.568	4615754.066	-1000000.000	697.433	697.433	31.588567	0.000	1.116	0.00	0.00	697.433	697.403	697.403
CIRC. KV 133923	184836.119	359362.242	4615768.241	-1500000.000	697.452	697.452	31.588066	0.000	1.237	0.00	0.00	697.452	697.401	697.401
CIRC. KV 133923	184840.000	359364.090	4615771.654	-1500000.000	697.457	697.457	31.587902	0.000	1.266	0.00	0.00	697.457	697.400	697.400
CIRC. Rampa	184860.000	359373.611	4615789.242	-1500000.000	697.484	697.484	31.587053	0.000	1.344	0.00	0.00	697.484	697.402	697.402
CIRC. Rampa	184880.000	359383.132	4615806.830	-1500000.000	697.511	697.511	31.586204	0.000	1.344	0.00	0.00	697.511	697.409	697.409
CIRC. Rampa	184900.000	359392.653	4615824.419	-1500000.000	697.538	697.538	31.585355	0.000	1.344	0.00	0.00	697.538	697.442	697.442
CIRC. Rampa	184920.000	359402.173	4615842.007	-1500000.000	697.564	697.564	31.584506	0.000	1.344	0.00	0.00	697.564	697.461	697.461
CIRC. Rampa	184940.000	359411.694	4615859.596	-1500000.000	697.591	697.591	31.583657	0.000	1.344	0.00	0.00	697.591	697.479	697.479
CIRC. Rampa	184960.000	359421.214	4615877.185	-1500000.000	697.618	697.618	31.582809	0.000	1.344	0.00	0.00	697.618	697.494	697.494
CLOT. Rampa	184967.644	359424.852	4615883.907	-1000000.000	697.628	697.628	31.582484	0.000	1.344	0.00	0.00	697.628	697.498	697.498
CLOT. Rampa	184980.000	359430.734	4615894.774	-1000000.000	697.645	697.645	31.582068	0.000	1.344	0.00	0.00	697.645	697.520	697.520
RECTA Rampa	184997.644	359439.132	4615910.291	0.000	697.669	697.669	31.581848	0.000	1.344	0.00	0.00	697.669	697.556	697.556
RECTA Rampa	185000.000	359440.254	4615912.363	0.000	697.672	697.672	31.581848	0.000	1.344	0.00	0.00	697.672	697.557	697.557
RECTA Rampa	185020.000	359449.773	4615929.952	0.000	697.699	697.699	31.581848	0.000	1.344	0.00	0.00	697.699	697.600	697.600
RECTA Rampa	185040.000	359459.293	4615947.541	0.000	697.726	697.726	31.581848	0.000	1.344	0.00	0.00	697.726	697.602	697.602
RECTA Rampa	185060.000	359468.813	4615965.130	0.000	697.753	697.753	31.581848	0.000	1.344	0.00	0.00	697.753	697.620	697.620
RECTA Rampa	185080.000	359478.333	4615982.719	0.000	697.779	697.779	31.581848	0.000	1.344	0.00	0.00	697.779	697.663	697.663
RECTA Rampa	185100.000	359487.852	4616000.308	0.000	697.806	697.806	31.581848	0.000	1.344	0.00	0.00	697.806	697.670	697.670
RECTA KV -127500	185120.000	359497.372	4616017.897	0.000	697.833	697.833	31.581848	0.000	1.261	0.00	0.00	697.833	697.680	697.680

Istram 20.08.08.26 11/02/21 09:46:32 200009 pagina 13

PROYECTO : ESTUDIO INFORMATIVO DE LA INTEGRACION DEL FFCC EN VALLADOLID
GRUPO : 1 : ALTERNATIVA 1
EJE : 1 : VIA 1 UIC

* * * PUNTOS DEL EJE EN PLANTA * * *

TIPO	P.K.	X	Y	RADIO	Z RAS IZ.	Z RAS DR.	AZIMUT	DIST. EJE	PEN(o/oo)	PERAL_I	PERAL_D	HILO BAJO	ZT (eje)	Z TERR.
RECTA KV -127500	185140.000	359506.892	4616035.486	0.000	697.856	697.856	31.581848	0.000	1.105	0.00	0.00	697.856	697.698	697.698
RECTA KV -127500	185160.000	359516.412	4616053.075	0.000	697.877	697.877	31.581848	0.000	0.948	0.00	0.00	697.877	697.715	697.715
RECTA KV -127500	185180.000	359525.931	4616070.664	0.000	697.894	697.894	31.581848	0.000	0.791	0.00	0.00	697.894	697.731	697.731
RECTA KV -127500	185200.000	359535.451	4616088.253	0.000	697.909	697.909	31.581848	0.000	0.634	0.00	0.00	697.909	697.703	697.703
RECTA KV -127500	185220.000	359544.971	4616105.842	0.000	697.920	697.920	31.581848	0.000	0.477	0.00	0.00	697.920	697.744	697.744
RECTA KV -127500	185240.000	359554.491	4616123.431	0.000	697.928	697.928	31.581848	0.000	0.320	0.00	0.00	697.928	697.798	697.798
RECTA KV -127500	185260.000	359564.010	4616141.020	0.000	697.932	697.932	31.581848	0.000	0.163	0.00	0.00	697.932	697.789	697.789
RECTA KV -127500	185280.000	359573.530	4616158.609	0.000	697.934	697.934	31.581848	0.000	0.006	0.00	0.00	697.934	697.824	697.824
RECTA Pendiente	185300.000	359583.050	4616176.198	0.000	697.933	697.933	31.581848	0.000	-0.068	0.00	0.00	697.933	697.860	697.860
RECTA Pendiente	185320.000	359592.570	4616193.787	0.000	697.932	697.932	31.581848	0.000	-0.068	0.00	0.00	697.932	697.787	697.787
RECTA Pendiente	185340.000	359602.089	4616211.376	0.000	697.930	697.930	31.581848	0.000	-0.068	0.00	0.00	697.930	697.767	697.767
RECTA Pendiente	185360.000	359611.609	4616228.965	0.000	697.929	697.929	31.581848	0.000	-0.068	0.00	0.00	697.929	697.827	697.827
RECTA Pendiente	185380.000	359621.129	4616246.555	0.000	697.928	697.928	31.581848	0.000	-0.068	0.00	0.00	697.928	697.826	697.826
RECTA Pendiente	185400.000	359630.649	4616264.144	0.000	697.926	697.926	31.581848	0.000	-0.068	0.00	0.00	697.926	697.729	697.729
RECTA Pendiente	185420.000	359640.168	4616281.733	0.000	697.925	697.925	31.581848	0.000	-0.068	0.00	0.00	697.925	697.731	697.731
RECTA Pendiente	185440.000	359649.688	4616299.322	0.000	697.924	697.924	31.581848	0.000	-0.068	0.00	0.00	697.924	697.760	697.760
RECTA Pendiente	185460.000	359659.208	4616316.911	0.000	697.922	697.922	31.581848	0.000	-0.068	0.00	0.00	697.922	697.765	697.765
RECTA Pendiente	185480.000	359668.728	4616334.500	0.000	697.921	697.921	31.581848	0.000	-0.068	0.00	0.00	697.921	697.746	697.746
RECTA Pendiente	185500.000	359678.247	4616352.089	0.000	697.920	697.920	31.581848	0.000	-0.068	0.00	0.00	697.920	697.819	697.819
RECTA Pendiente	185520.000	359687.767	4616369.678	0.000	697.918	697.918	31.581848	0.000	-0.068	0.00	0.00	697.918	697.752	697.752
RECTA Pendiente	185540.000	359697.287	4616387.267	0.000	697.917	697.917	31.581848	0.000	-0.068	0.00	0.00	697.917	697.789	697.789
RECTA Pendiente	185560.000	359706.807	4616404.856	0.000	697.916	697.916	31.581848	0.000	-0.068	0.00	0.00	697.916	697.888	697.888
RECTA Pendiente	185580.000	359716.326	4616422.445	0.000	697.914	697.914	31.581848	0.000	-0.068	0.00	0.00	697.914	697.831	697.831
RECTA Pendiente	185600.000	359725.846	4616440.034	0.000	697.913	697.913	31.581848	0.000	-0.068	0.00	0.00	697.913	697.832	697.832
RECTA Pendiente	185620.000	359735.366	4616457.623	0.000	697.912	697.912	31.581848	0.000	-0.068	0.00	0.00	697.912	697.767	697.767
RECTA Pendiente	185640.000	359744.886	4616475.212	0.000	697.910	697.910	31.581848	0.000	-0.068	0.00	0.00	697.910	697.782	697.782
RECTA Pendiente	185660.000	359754.405	4616492.801	0.000	697.909	697.909	31.581848	0.000	-0.068	0.00	0.00	697.909	697.712	697.712
RECTA Pendiente	185680.000	359763.925	4616510.390	0.000	697.907	697.907	31.581848	0.000	-0.068	0.00	0.00	697.907	697.686	697.686
RECTA Pendiente	185700.000	359773.445	4616527.979	0.000	697.906	697.906	31.581848	0.000	-0.068	0.00	0.00	697.906	697.715	697.715
RECTA KV 2053220	185720.000	359782.965	4616545.568	0.000	697.905	697.905	31.581848	0.000	-0.058	0.00	0.00	697.905	697.663	697.663
RECTA KV 2053220	185740.000	359792.484	4616563.157	0.000	697.904	697.904	31.581848	0.000	-0.048	0.00	0.00	697.904	697.685	697.685
RECTA KV 2053220	185760.000	359802.004	4616580.746	0.000	697.903	697.903	31.581848	0.000	-0.039	0.00	0.00	697.903	697.744	697.744
RECTA KV 2053220	185780.000	359811.524	4616598.335	0.000	697.902	697.902	31.581848	0.000	-0.029	0.00	0.00	697.902	700.160	700.160
RECTA KV 2053220	185800.000	359821.044	4616615.924	0.000	697.902	697.902	31.581848	0.000	-0.019	0.00	0.00	697.902	697.707	697.707
RECTA KV 2053220	185820.000	359830.563	4616633.513	0.000	697.901	697.901	31.581848	0.000	-0.009	0.00	0.00	697.901	697.646	697.646
RECTA KV 2053220	185840.000	359840.083	4616651.102	0.000	697.901	697.901	31.581848	0.000	0.000	0.00	0.00	697.901	697.703	697.703
RECTA KV 2053220	185860.000	359849.603	4616668.692	0.000	697.901	697.901	31.581848	0.000	0.010	0.00	0.00	697.901	697.741	697.741
RECTA KV 2053220	185880.000	359859.123	4616686.281	0.000	697.902	697.902	31.581848	0.000	0.020	0.00	0.00	697.902	697.710	697.710
RECTA Rampa	185900.000	359868.642	4616703.870	0.000	697.902	697.902	31.581848	0.000	0.020	0.00	0.00	697.902	697.680	697.680
RECTA Rampa	185920.000	359878.162	4616721.459	0.000	697.903	697.903	31.581848	0.000	0.020	0.00	0.00	697.903	697.695	697.695
RECTA Rampa	185940.000	359887.682	4616739.048	0.000	697.903	697.903	31.581848	0.000	0.020	0.00	0.00	697.903	697.722	697.722
RECTA Rampa	185960.000	359897.202	4616756.637	0.000	697.903	697.903	31.581848	0.000	0.020	0.00	0.00	697.903	697.755	697.755
RECTA Rampa	185980.000	359906.721	4616774.226	0.000	697.904	697.904	31.581848	0.000	0.020	0.00	0.00	697.904	697.787	697.787
RECTA Rampa	186000.000	359916.241	4616791.815	0.000	697.904	697.904	31.581848	0.000	0.020	0.00	0.00	697.904	697.792	697.792
RECTA Rampa	186020.000	359925.761	4616809.404	0.000	697.905	697.905	31.581848	0.000	0.020	0.00	0.00	697.905	697.815	697.815
RECTA Rampa	186040.000	359935.281	4616826.993	0.000	697.905	697.905	31.581848	0.000	0.020	0.00	0.00	697.905	697.840	697.840
RECTA Rampa	186060.000	359944.800	4616844.582	0.000	697.905	697.905	31.581848	0.000	0.020	0.00	0.00	697.905	697.838	697.838
RECTA Rampa	186080.000	359954.320	4616862.171	0.000	697.906	697.906	31.581848	0.000	0.020	0.00	0.00	697.906	697.804	697.804
RECTA Rampa	186100.000	359963.840	4616879.760	0.000	697.906	697.906	31.581848	0.000	0.020	0.00	0.00	697.906	697.829	697.829
RECTA Rampa	186120.000	359973.360	4616897.349	0.000	697.907	697.907	31.581848	0.000	0.020	0.00	0.00	697.907	697.854	697.854

Istram 20.08.08.26 11/02/21 09:46:32 200009 pagina 14

PROYECTO : ESTUDIO INFORMATIVO DE LA INTEGRACION DEL FFCC EN VALLADOLID
GRUPO : 1 : ALTERNATIVA 1
EJE : 1 : VIA 1 UIC

* * * PUNTOS DEL EJE EN PLANTA * * *

TIPO	P.K.	X	Y	RADIO	Z RAS IZ.	Z RAS DR.	AZIMUT	DIST. EJE	PEN(o/oo)	PERAL_I	PERAL_D	HILO BAJO	ZT (eje)	Z TERR.
RECTA Rampa	186140.000	359982.879	4616914.938	0.000	697.907	697.907	31.581848	0.000	0.020	0.00	0.00	697.907	697.803	697.803
CLOT. Rampa	186157.077	359991.008	4616929.957	1000000.000	697.907	697.907	31.581848	0.000	0.020	0.00	0.00	697.907	697.884	697.884
CLOT. Rampa	186160.000	359992.399	4616932.527	1000000.000	697.907	697.907	31.581867	0.000	0.020	0.00	0.00	697.907	697.901	697.901
CIRC. Rampa	186177.077	360000.528	4616947.546	690000.000	697.908	697.908	31.582770	0.000	0.020	0.00	0.00	697.908	697.947	697.947
CIRC. Rampa	186180.000	360001.919	4616950.116	690000.000	697.908	697.908	31.583040	0.000	0.020	0.00	0.00	697.908	697.955	697.955
CIRC. Rampa	186200.000	360011.439	4616967.705	690000.000	697.908	697.908	31.584885	0.000	0.020	0.00	0.00	697.908	697.823	697.823
CIRC. Rampa	186220.000	360020.960	4616985.293	690000.000	697.909	697.909	31.586730	0.000	0.020	0.00	0.00	697.909	697.891	697.891
CIRC. Rampa	186240.000	360030.482	4617002.881	690000.000	697.909	697.909	31.588576	0.000	0.020	0.00	0.00	697.909	697.854	697.854
CIRC. Rampa	186260.000	360040.003	4617020.469	690000.000	697.909	697.909	31.590421	0.000	0.020	0.00	0.00	697.909	697.774	697.774
CIRC. Rampa	186280.000	360049.526	4617038.057	690000.000	697.910	697.910	31.592266	0.000	0.020	0.00	0.00	697.910	697.773	697.773
CLOT. Rampa	186295.217	360056.771	4617051.438	690000.000	697.910	697.910	31.593670	0.000	0.020	0.00	0.00	697.910	697.765	697.765
CLOT. Rampa	186300.000	360059.049	4617055.644	906886.096	697.910	697.910	31.594059	0.000	0.020	0.00	0.00	697.910	697.759	697.759
RECTA Rampa	186315.217	360066.294	4617069.025	0.000	697.910	697.910	31.594593	0.000	0.020	0.00	0.00	697.910	697.739	697.739
RECTA Rampa	186320.000	360068.572	4617073.231	0.000	697.911	697.911	31.594593	0.000	0.020	0.00	0.00	697.911	697.731	697.731
RECTA Rampa	186340.000	360078.095	4617090.819	0.000	697.911	697.911	31.594593	0.000	0.020	0.00	0.00	697.911	697.757	697.757
RECTA Rampa	186360.000	360087.618	4617108.406	0.000	697.911	697.911	31.594593	0.000	0.020	0.00	0.00	697.911	697.847	697.847
RECTA Rampa	186380.000	360097.142	4617125.993	0.000	697.912	697.912	31.594593	0.000	0.020	0.00	0.00	697.912	697.799	697.799
RECTA Rampa	186400.000	360106.665	4617143.580	0.000	697.912	697.912	31.594593	0.000	0.020	0.00	0.00	697.912	697.743	697.743
RECTA Rampa	186420.000	360116.188	4617161.167	0.000	697.913	697.913	31.594593	0.000	0.020	0.00	0.00	697.913	697.803	697.803
RECTA Rampa	186440.000	360125.711	4617178.754	0.000	697.913	697.913	31.594593	0.000	0.020	0.00	0.00	697.913	697.738	697.738
RECTA Rampa	186460.000	360135.235	4617196.341	0.000	697.913	697.913	31.594593	0.000	0.020	0.00	0.00	697.913	697.692	697.692
RECTA Rampa	186480.000	360144.758	4617213.929	0.000	697.914	697.914	31.594593	0.000	0.020	0.00	0.00	697.914	697.674	697.674
RECTA Rampa	186500.000	360154.281	4617231.516	0.000	697.914	697.914	31.594593	0.000	0.020	0.00	0.00	697.914	697.678	697.678
RECTA Rampa	186520.000	360163.805	4617249.103	0.000	697.915	697.915	31.594593	0.000	0.020	0.00	0.00	697.915	697.661	697.661
RECTA Rampa	186540.000	360173.328	4617266.690	0.000	697.915	697.915	31.594593	0.000	0.020	0.00	0.00	697.915	697.692	697.692
RECTA Rampa	186560.000	360182.851	4617284.277	0.000	697.915	697.915	31.594593	0.000	0.020	0.00	0.00	697.915	697.716	697.716
RECTA Rampa	186580.000	360192.374	4617301.864	0.000	697.916	697.916	31.594593	0.000	0.020	0.00	0.00	697.916	697.716	697.716
RECTA Rampa	186600.000	360201.898	4617319.451	0.000	697.916	697.916	31.594593	0.000	0.020	0.00	0.00	697.916	697.765	697.765
RECTA Rampa	186620.000	360211.421	4617337.039	0.000	697.917	697.917	31.594593	0.000	0.020	0.00	0.00	697.917	697.749	697.749
RECTA Rampa	186640.000	360220.944	4617354.626	0.000	697.917	697.917	31.594593	0.000	0.020	0.00	0.00	697.917	697.823	697.823
RECTA Rampa	186660.000	360230.467	4617372.213	0.000	697.917	697.917	31.594593	0.000	0.020	0.00	0.00	697.917	697.750	697.750
RECTA Rampa	186680.000	360239.991	4617389.800	0.000	697.918	697.918	31.594593	0.000	0.020	0.00	0.00	697.918	697.790	697.790
RECTA Rampa	186700.000	360249.514	4617407.387	0.000	697.918	697.918	31.594593	0.000	0.020	0.00	0.00	697.918	697.856	697.856
RECTA Rampa	186720.000	360259.037	4617424.974	0.000	697.919	697.919	31.594593	0.000	0.020	0.00	0.00	697.919	697.791	697.791
RECTA Rampa	186740.000	360268.561	4617442.561	0.000	697.919	697.919	31.594593	0.000	0.020	0.00	0.00	697.919	697.753	697.753
RECTA Rampa	186760.000	360278.084	4617460.148	0.000	697.919	697.919	31.594593	0.000	0.020	0.00	0.00	697.919	697.827	697.827
RECTA Rampa	186780.000	360287.607	4617477.736	0.000	697.920	697.920	31.594593	0.000	0.020	0.00	0.00	697.920	697.807	697.807
RECTA Rampa	186800.000	360297.130	4617495.323	0.000	697.920	697.920	31.594593	0.000	0.020	0.00	0.00	697.920	697.821	697.821
RECTA Rampa	186820.000	360306.654	4617512.910	0.000	697.921	697.921	31.594593	0.000	0.020	0.00	0.00	697.921	697.813	697.813
RECTA Rampa	186840.000	360316.177	4617530.497	0.000	697.921	697.921	31.594593	0.000	0.020	0.00	0.00	697.921	697.731	697.731
RECTA Rampa	186860.000	360325.700	4617548.084	0.000	697.921	697.921	31.594593	0.000	0.020	0.00	0.00	697.921	697.793	697.793
RECTA Rampa	186880.000	360335.223	4617565.671	0.000	697.922	697.922	31.594593	0.000	0.020	0.00	0.00	697.922	697.765	697.765
RECTA Rampa	186900.000	360344.747	4617583.258	0.000	697.922	697.922	31.594593	0.000	0.020	0.00	0.00	697.922	697.804	697.804
RECTA Rampa	186920.000	360354.270	4617600.846	0.000	697.923	697.923	31.594593	0.000	0.020	0.00	0.00	697.923	697.752	697.752
RECTA Rampa	186940.000	360363.793	4617618.433	0.000	697.923	697.923	31.594593	0.000	0.020	0.00	0.00	697.923	697.785	697.785
RECTA Rampa	186960.000	360373.317	4617636.020	0.000	697.923	697.923	31.594593	0.000	0.020	0.00	0.00	697.923	697.723	697.723
RECTA Rampa	186980.000	360382.840	4617653.607	0.000	697.924	697.924	31.594593	0.000	0.020	0.00	0.00	697.924	697.711	697.711
RECTA Rampa	187000.000	360392.363	4617671.194	0.000	697.924	697.924	31.594593	0.000	0.020	0.00	0.00	697.924	697.731	697.731
RECTA Rampa	187020.000	360401.886	4617688.781	0.000	697.925	697.925	31.594593	0.000	0.020	0.00	0.00	697.925	697.684	697.684
RECTA Rampa	187040.000	360411.410	4617706.368	0.000	697.925	697.925	31.594593	0.000	0.020	0.00	0.00	697.925	697.703	697.703

Istram 20.08.08.26 11/02/21 09:46:32 200009 pagina 15
PROYECTO : ESTUDIO INFORMATIVO DE LA INTEGRACION DEL FFCC EN VALLADOLID
GRUPO : 1 : ALTERNATIVA 1
EJE : 1 : VIA 1 UIC

* * * PUNTOS DEL EJE EN PLANTA * * *

TIPO	P.K.	X	Y	RADIO	Z RAS IZ.	Z RAS DR.	AZIMUT	DIST. EJE	PEN(o/oo)	PERAL_I	PERAL_D	HILO BAJO	ZT (eje)	Z TERR.
RECTA Rampa	187060.000	360420.933	4617723.955	0.000	697.925	697.925	31.594593	0.000	0.020	0.00	0.00	697.925	697.747	697.747
RECTA Rampa	187080.000	360430.456	4617741.543	0.000	697.926	697.926	31.594593	0.000	0.020	0.00	0.00	697.926	697.670	697.670
RECTA Rampa	187100.000	360439.979	4617759.130	0.000	697.926	697.926	31.594593	0.000	0.020	0.00	0.00	697.926	697.689	697.689
RECTA KV 62015650	187120.000	360449.503	4617776.717	0.000	697.927	697.927	31.594593	0.000	0.020	0.00	0.00	697.927	697.632	697.632
RECTA KV 62015650	187140.000	360459.026	4617794.304	0.000	697.927	697.927	31.594593	0.000	0.021	0.00	0.00	697.927	697.603	697.603
RECTA KV 62015650	187160.000	360468.549	4617811.891	0.000	697.927	697.927	31.594593	0.000	0.021	0.00	0.00	697.927	697.623	697.623
RECTA KV 62015650	187180.000	360478.072	4617829.478	0.000	697.928	697.928	31.594593	0.000	0.021	0.00	0.00	697.928	697.654	697.654
RECTA KV 62015650	187200.000	360487.596	4617847.065	0.000	697.928	697.928	31.594593	0.000	0.022	0.00	0.00	697.928	697.680	697.680
RECTA KV 62015650	187220.000	360497.119	4617864.653	0.000	697.929	697.929	31.594593	0.000	0.022	0.00	0.00	697.929	697.649	697.649
RECTA KV 62015650	187240.000	360506.642	4617882.240	0.000	697.929	697.929	31.594593	0.000	0.022	0.00	0.00	697.929	697.610	697.610
RECTA KV 62015650	187260.000	360516.166	4617899.827	0.000	697.930	697.930	31.594593	0.000	0.023	0.00	0.00	697.930	697.618	697.618
RECTA KV 62015650	187280.000	360525.689	4617917.414	0.000	697.930	697.930	31.594593	0.000	0.023	0.00	0.00	697.930	697.646	697.646
RECTA Rampa	187300.000	360535.212	4617935.001	0.000	697.931	697.931	31.594593	0.000	0.023	0.00	0.00	697.931	697.619	697.619
RECTA Rampa	187320.000	360544.735	4617952.588	0.000	697.931	697.931	31.594593	0.000	0.023	0.00	0.00	697.931	697.606	697.606
RECTA Rampa	187340.000	360554.259	4617970.175	0.000	697.931	697.931	31.594593	0.000	0.023	0.00	0.00	697.931	697.650	697.650
RECTA Rampa	187360.000	360563.782	4617987.763	0.000	697.932	697.932	31.594593	0.000	0.023	0.00	0.00	697.932	697.605	697.605
RECTA Rampa	187380.000	360573.305	4618005.350	0.000	697.932	697.932	31.594593	0.000	0.023	0.00	0.00	697.932	697.592	697.592
RECTA Rampa	187400.000	360582.828	4618022.937	0.000	697.933	697.933	31.594593	0.000	0.023	0.00	0.00	697.933	697.613	697.613
RECTA Rampa	187420.000	360592.352	4618040.524	0.000	697.933	697.933	31.594593	0.000	0.023	0.00	0.00	697.933	697.584	697.584
RECTA Rampa	187440.000	360601.875	4618058.111	0.000	697.934	697.934	31.594593	0.000	0.023	0.00	0.00	697.934	697.590	697.590
RECTA Rampa	187460.000	360611.398	4618075.698	0.000	697.934	697.934	31.594593	0.000	0.023	0.00	0.00	697.934	697.596	697.596
RECTA Rampa	187480.000	360620.922	4618093.285	0.000	697.935	697.935	31.594593	0.000	0.023	0.00	0.00	697.935	697.619	697.619
RECTA Rampa	187500.000	360630.445	4618110.872	0.000	697.935	697.935	31.594593	0.000	0.023	0.00	0.00	697.935	697.619	697.619
RECTA Rampa	187520.000	360639.968	4618128.460	0.000	697.936	697.936	31.594593	0.000	0.023	0.00	0.00	697.936	697.603	697.603
RECTA Rampa	187540.000	360649.491	4618146.047	0.000	697.936	697.936	31.594593	0.000	0.023	0.00	0.00	697.936	697.606	697.606
CLOT. Rampa	187551.310	360654.877	4618155.993	1000000.000	697.936	697.936	31.594593	0.000	0.023	0.00	0.00	697.936	697.628	697.628
CLOT. Rampa	187560.000	360659.015	4618163.634	74312.880	697.936	697.936	31.598315	0.000	0.023	0.00	0.00	697.936	697.604	697.604
CLOT. Rampa	187580.000	360668.543	4618181.218	22508.148	697.937	697.937	31.635166	0.000	0.023	0.00	0.00	697.937	697.591	697.591
CLOT. Rampa	187600.000	360678.087	4618198.794	13262.583	697.937	697.937	31.711451	0.000	0.023	0.00	0.00	697.937	697.622	697.622
CLOT. KV 10600	187620.000	360687.658	4618216.355	9400.985	697.957	697.957	31.827170	0.000	1.906	0.00	0.00	697.957	697.641	697.641
CLOT. KV 10600	187640.000	360697.266	4618233.896	7281.011	698.014	698.014	31.982324	0.000	3.793	0.00	0.00	698.014	697.668	697.668
CLOT. KV 10600	187660.000	360706.922	4618251.411	5941.230	698.108	698.108	32.176913	0.000	5.680	0.00	0.00	698.108	697.763	697.763
CLOT. KV 10600	187680.000	360716.637	4618268.893	5017.888	698.241	698.241	32.410936	0.000	7.566	0.00	0.00	698.241	697.731	697.731
CLOT. KV 10600	187700.000	360726.422	4618286.336	4342.940	698.411	698.411	32.684393	0.000	9.453	0.00	0.00	698.411	697.725	697.725
CLOT. KV 10600	187720.000	360736.286	4618303.734	3828.037	698.619	698.619	32.997285	0.000	11.340	0.00	0.00	698.619	697.698	697.698
CLOT. KV 10600	187740.000	360746.242	4618321.080	3422.287	698.865	698.865	33.349611	0.000	13.227	0.00	0.00	698.865	697.670	697.670
CIRC. KV 10600	187756.310	360754.435	4618335.183	3150.000	699.093	699.093	33.666133	0.000	14.765	0.00	0.00	699.093	697.679	697.679
CLOT. KV 10600	187756.310	360754.435	4618335.183	3150.006	699.093	699.093	33.666125	0.000	14.765	0.00	0.00	699.093	697.679	697.679

Istram 20.08.08.26 11/02/21 09:46:59 200009 pagina 1
PROYECTO : ESTUDIO INFORMATIVO DE LA INTEGRACION DEL FFCC EN VALLADOLID
GRUPO : 1 : ALTERNATIVA 1
EJE : 2 : VIA 2 UIC

* * * PUNTOS DEL EJE EN PLANTA * * *

TIPO	P.K.	X	Y	RADIO	Z RAS IZ.	Z RAS DR.	AZIMUT	DIST. EJE	PEN(o/oo)	PERAL_I	PERAL_D	HILO BAJO	ZT (eje)	Z TERR.
RECTA Pendiente	174876.679	354437.426	4607545.024	0.000	691.847	691.847	20.405639	0.000	-5.426	0.00	0.00	691.847		
RECTA Pendiente	174880.000	354438.472	4607548.176	0.000	691.829	691.829	20.405639	0.000	-5.426	0.00	0.00	691.829		
RECTA Pendiente	174900.000	354444.773	4607567.158	0.000	691.721	691.721	20.405639	0.000	-5.426	0.00	0.00	691.721		
RECTA KV 60000	174920.000	354451.075	4607586.139	0.000	691.615	691.615	20.405639	0.000	-5.125	0.00	0.00	691.615		
RECTA KV 60000	174940.000	354457.376	4607605.120	0.000	691.516	691.516	20.405639	0.000	-4.792	0.00	0.00	691.516		
RECTA KV 60000	174960.000	354463.678	4607624.102	0.000	691.423	691.423	20.405639	0.000	-4.458	0.00	0.00	691.423		
RECTA KV 60000	174980.000	354469.979	4607643.083	0.000	691.338	691.338	20.405639	0.000	-4.125	0.00	0.00	691.338		
RECTA KV 60000	175000.000	354476.280	4607662.064	0.000	691.258	691.258	20.405639	0.000	-3.792	0.00	0.00	691.258		
RECTA KV 60000	175020.000	354482.582	4607681.046	0.000	691.186	691.186	20.405639	0.000	-3.458	0.00	0.00	691.186		
RECTA KV 60000	175040.000	354488.883	4607700.027	0.000	691.120	691.120	20.405639	0.000	-3.125	0.00	0.00	691.120		
RECTA KV 60000	175060.000	354495.185	4607719.008	0.000	691.061	691.061	20.405639	0.000	-2.792	0.00	0.00	691.061		
RECTA KV 60000	175080.000	354501.486	4607737.990	0.000	691.008	691.008	20.405639	0.000	-2.458	0.00	0.00	691.008		
RECTA KV 60000	175100.000	354507.787	4607756.971	0.000	690.963	690.963	20.405639	0.000	-2.125	0.00	0.00	690.963		
RECTA KV 60000	175120.000	354514.089	4607775.953	0.000	690.923	690.923	20.405639	0.000	-1.792	0.00	0.00	690.923		
RECTA Pendiente	175140.000	354520.390	4607794.934	0.000	690.891	690.891	20.405639	0.000	-1.559	0.00	0.00	690.891		
RECTA Pendiente	175160.000	354526.692	4607813.915	0.000	690.860	690.860	20.405639	0.000	-1.559	0.00	0.00	690.860		
RECTA Pendiente	175180.000	354532.993	4607832.897	0.000	690.828	690.828	20.405639	0.000	-1.559	0.00	0.00	690.828		
RECTA Pendiente	175200.000	354539.294	4607851.878	0.000	690.797	690.797	20.405639	0.000	-1.559	0.00	0.00	690.797		
RECTA Pendiente	175220.000	354545.596	4607870.859	0.000	690.766	690.766	20.405639	0.000	-1.559	0.00	0.00	690.766		
RECTA Pendiente	175240.000	354551.897	4607889.841	0.000	690.735	690.735	20.405639	0.000	-1.559	0.00	0.00	690.735		
RECTA Pendiente	175260.000	354558.199	4607908.822	0.000	690.704	690.704	20.405639	0.000	-1.559	0.00	0.00	690.704		
RECTA Pendiente	175280.000	354564.500	4607927.803	0.000	690.672	690.672	20.405639	0.000	-1.559	0.00	0.00	690.672		
RECTA Pendiente	175300.000	354570.802	4607946.785	0.000	690.641	690.641	20.405639	0.000	-1.559	0.00	0.00	690.641		
RECTA Pendiente	175320.000	354577.103	4607965.766	0.000	690.610	690.610	20.405639	0.000	-1.559	0.00	0.00	690.610		
RECTA Pendiente	175340.000	354583.404	4607984.748	0.000	690.579	690.579	20.405639	0.000	-1.559	0.00	0.00	690.579		
RECTA Pendiente	175360.000	354589.706	4608003.729	0.000	690.548	690.548	20.405639	0.000	-1.559	0.00	0.00	690.548		
RECTA KV 97500	175380.000	354596.007	4608022.710	0.000	690.516	690.516	20.405639	0.000	-1.551	0.00	0.00	690.516		
RECTA KV 97500	175400.000	354602.309	4608041.692	0.000	690.488	690.488	20.405639	0.000	-1.346	0.00	0.00	690.488		
RECTA KV 97500	175420.000	354608.610	4608060.673	0.000	690.463	690.463	20.405639	0.000	-1.141	0.00	0.00	690.463		
RECTA KV 97500	175440.000	354614.911	4608079.654	0.000	690.442	690.442	20.405639	0.000	-0.935	0.00	0.00	690.442		
RECTA KV 97500	175460.000	354621.213	4608098.636	0.000	690.425	690.425	20.405639	0.000	-0.730	0.00	0.00	690.425		
RECTA Pendiente	175480.000	354627.514	4608117.617	0.000	690.411	690.411	20.405639	0.000	-0.694	0.00	0.00	690.411		
RECTA Pendiente	175500.000	354633.816	4608136.598	0.000	690.397	690.397	20.405639	0.000	-0.694	0.00	0.00	690.397		
RECTA Pendiente	175520.000	354640.117	4608155.580	0.000	690.384	690.384	20.405639	0.000	-0.694	0.00	0.00	690.384		
RECTA Pendiente	175540.000	354646.418	4608174.561	0.000	690.370	690.370	20.405639	0.000	-0.694	0.00	0.00	690.370		
RECTA Pendiente	175560.000	354652.720	4608193.543	0.000	690.356	690.356	20.405639	0.000	-0.694	0.00	0.00	690.356		
RECTA Pendiente	175580.000	354659.021	4608212.524	0.000	690.342	690.342	20.405639	0.000	-0.694	0.00	0.00	690.342		
RECTA Pendiente	175600.000	354665.323	4608231.505	0.000	690.328	690.328	20.405639	0.000	-0.694	0.00	0.00	690.328		
RECTA Pendiente	175620.000	354671.624	4608250.487	0.000	690.314	690.314	20.405639	0.000	-0.694	0.00	0.00	690.314		
RECTA Pendiente	175640.000	354677.926	4608269.468	0.000	690.300	690.300	20.405639	0.000	-0.694	0.00	0.00	690.300		
RECTA Pendiente	175660.000	354684.227	4608288.449	0.000	690.286	690.286	20.405639	0.000	-0.694	0.00	0.00	690.286		
RECTA Pendiente	175680.000	354690.528	4608307.431	0.000	690.272	690.272	20.405639	0.000	-0.694	0.00	0.00	690.272		
RECTA Pendiente	175700.000	354696.830	4608326.412	0.000	690.259	690.259	20.405639	0.000	-0.694	0.00	0.00	690.259		
RECTA Pendiente	175720.000	354703.131	4608345.393	0.000	690.245	690.245	20.405639	0.000	-0.694	0.00	0.00	690.245		
RECTA Pendiente	175740.000	354709.433	4608364.375	0.000	690.231	690.231	20.405639	0.000	-0.694	0.00	0.00	690.231		
RECTA Pendiente	175760.000	354715.734	4608383.356	0.000	690.217	690.217	20.405639	0.000	-0.694	0.00	0.00	690.217		
RECTA Pendiente	175780.000	354722.035	4608402.338	0.000	690.203	690.203	20.405639	0.000	-0.694	0.00	0.00	690.203		
RECTA Pendiente	175800.000	354728.337	4608421.319	0.000	690.189	690.189	20.405639	0.000	-0.694	0.00	0.00	690.189		
RECTA Pendiente	175820.000	354734.638	4608440.300	0.000	690.175	690.175	20.405639	0.000	-0.694	0.00	0.00	690.175		
RECTA Pendiente	175840.000	354740.940	4608459.282	0.000	690.161	690.161	20.405639	0.000	-0.694	0.00	0.00	690.161		

Istram 20.08.08.26 11/02/21 09:47:00 200009 pagina 2

PROYECTO : ESTUDIO INFORMATIVO DE LA INTEGRACION DEL FFCC EN VALLADOLID
GRUPO : 1 : ALTERNATIVA 1
EJE : 2 : VIA 2 UIC

* * * PUNTOS DEL EJE EN PLANTA * * *

TIPO	P.K.	X	Y	RADIO	Z RAS IZ.	Z RAS DR.	AZIMUT	DIST. EJE	PEN(o/oo)	PERAL_I	PERAL_D	HILO BAJO	ZT (eje)	Z TERR.
RECTA Pendiente	175860.000	354747.241	4608478.263	0.000	690.147	690.147	20.405639	0.000	-0.694	0.00	0.00	690.147		
RECTA Pendiente	175880.000	354753.542	4608497.244	0.000	690.134	690.134	20.405639	0.000	-0.694	0.00	0.00	690.134		
RECTA Pendiente	175900.000	354759.844	4608516.226	0.000	690.120	690.120	20.405639	0.000	-0.694	0.00	0.00	690.120		
RECTA Pendiente	175920.000	354766.145	4608535.207	0.000	690.106	690.106	20.405639	0.000	-0.694	0.00	0.00	690.106		
RECTA Pendiente	175940.000	354772.447	4608554.189	0.000	690.092	690.092	20.405639	0.000	-0.694	0.00	0.00	690.092		
RECTA Pendiente	175960.000	354778.748	4608573.170	0.000	690.078	690.078	20.405639	0.000	-0.694	0.00	0.00	690.078		
RECTA Pendiente	175980.000	354785.050	4608592.151	0.000	690.064	690.064	20.405639	0.000	-0.694	0.00	0.00	690.064		
RECTA Pendiente	176000.000	354791.351	4608611.133	0.000	690.050	690.050	20.405639	0.000	-0.694	0.00	0.00	690.050		
RECTA Pendiente	176020.000	354797.652	4608630.114	0.000	690.036	690.036	20.405639	0.000	-0.694	0.00	0.00	690.036		
RECTA Pendiente	176040.000	354803.954	4608649.095	0.000	690.023	690.023	20.405639	0.000	-0.694	0.00	0.00	690.023		
RECTA Pendiente	176060.000	354810.255	4608668.077	0.000	690.009	690.009	20.405639	0.000	-0.694	0.00	0.00	690.009		
RECTA Pendiente	176080.000	354816.557	4608687.058	0.000	689.995	689.995	20.405639	0.000	-0.694	0.00	0.00	689.995		
RECTA Pendiente	176100.000	354822.858	4608706.039	0.000	689.981	689.981	20.405639	0.000	-0.694	0.00	0.00	689.981		
RECTA Pendiente	176120.000	354829.159	4608725.021	0.000	689.967	689.967	20.405639	0.000	-0.694	0.00	0.00	689.967		
RECTA Pendiente	176140.000	354835.461	4608744.002	0.000	689.953	689.953	20.405639	0.000	-0.694	0.00	0.00	689.953		
RECTA Pendiente	176160.000	354841.762	4608762.984	0.000	689.939	689.939	20.405639	0.000	-0.694	0.00	0.00	689.939		
RECTA Pendiente	176180.000	354848.064	4608781.965	0.000	689.925	689.925	20.405639	0.000	-0.694	0.00	0.00	689.925		
RECTA Pendiente	176200.000	354854.365	4608800.946	0.000	689.911	689.911	20.405639	0.000	-0.694	0.00	0.00	689.911		
RECTA Pendiente	176220.000	354860.666	4608819.928	0.000	689.898	689.898	20.405639	0.000	-0.694	0.00	0.00	689.898		
RECTA Pendiente	176240.000	354866.968	4608838.909	0.000	689.884	689.884	20.405639	0.000	-0.694	0.00	0.00	689.884		
RECTA Pendiente	176260.000	354873.269	4608857.890	0.000	689.870	689.870	20.405639	0.000	-0.694	0.00	0.00	689.870		
RECTA Pendiente	176280.000	354879.571	4608876.872	0.000	689.856	689.856	20.405639	0.000	-0.694	0.00	0.00	689.856		
RECTA Pendiente	176300.000	354885.872	4608895.853	0.000	689.842	689.842	20.405639	0.000	-0.694	0.00	0.00	689.842		
RECTA Pendiente	176320.000	354892.174	4608914.834	0.000	689.828	689.828	20.405639	0.000	-0.694	0.00	0.00	689.828		
RECTA Pendiente	176340.000	354898.475	4608933.816	0.000	689.814	689.814	20.405639	0.000	-0.694	0.00	0.00	689.814		
RECTA KV 140000	176360.000	354904.776	4608952.797	0.000	689.801	689.801	20.405639	0.000	-0.601	0.00	0.00	689.801		
RECTA KV 140000	176380.000	354911.078	4608971.779	0.000	689.790	689.790	20.405639	0.000	-0.458	0.00	0.00	689.790		
RECTA KV 140000	176400.000	354917.379	4608990.760	0.000	689.783	689.783	20.405639	0.000	-0.315	0.00	0.00	689.783		
RECTA KV 140000	176420.000	354923.681	4609009.741	0.000	689.778	689.778	20.405639	0.000	-0.172	0.00	0.00	689.778		
RECTA KV 140000	176440.000	354929.982	4609028.723	0.000	689.776	689.776	20.405639	0.000	-0.029	0.00	0.00	689.776		
RECTA KV 140000	176460.000	354936.283	4609047.704	0.000	689.777	689.777	20.405639	0.000	0.114	0.00	0.00	689.777		
RECTA KV 140000	176480.000	354942.585	4609066.685	0.000	689.780	689.780	20.405639	0.000	0.257	0.00	0.00	689.780		
RECTA Rampa	176500.000	354948.886	4609085.667	0.000	689.786	689.786	20.405639	0.000	0.283	0.00	0.00	689.786		
RECTA Rampa	176520.000	354955.188	4609104.648	0.000	689.792	689.792	20.405639	0.000	0.283	0.00	0.00	689.792		
RECTA Rampa	176540.000	354961.489	4609123.629	0.000	689.797	689.797	20.405639	0.000	0.283	0.00	0.00	689.797		
RECTA Rampa	176560.000	354967.790	4609142.611	0.000	689.803	689.803	20.405639	0.000	0.283	0.00	0.00	689.803		
RECTA Rampa	176580.000	354974.092	4609161.592	0.000	689.809	689.809	20.405639	0.000	0.283	0.00	0.00	689.809		
RECTA Rampa	176600.000	354980.393	4609180.574	0.000	689.814	689.814	20.405639	0.000	0.283	0.00	0.00	689.814		
RECTA Rampa	176620.000	354986.695	4609199.555	0.000	689.820	689.820	20.405639	0.000	0.283	0.00	0.00	689.820		
RECTA Rampa	176640.000	354992.996	4609218.536	0.000	689.826	689.826	20.405639	0.000	0.283	0.00	0.00	689.826		
RECTA Rampa	176660.000	354999.298	4609237.518	0.000	689.831	689.831	20.405639	0.000	0.283	0.00	0.00	689.831		
RECTA Rampa	176680.000	355005.599	4609256.499	0.000	689.837	689.837	20.405639	0.000	0.283	0.00	0.00	689.837		
RECTA Rampa	176700.000	355011.900	4609275.480	0.000	689.843	689.843	20.405639	0.000	0.283	0.00	0.00	689.843		
RECTA Rampa	176720.000	355018.202	4609294.462	0.000	689.848	689.848	20.405639	0.000	0.283	0.00	0.00	689.848		
RECTA Rampa	176740.000	355024.503	4609313.443	0.000	689.854	689.854	20.405639	0.000	0.283	0.00	0.00	689.854		
RECTA Rampa	176760.000	355030.805	4609332.424	0.000	689.860	689.860	20.405639	0.000	0.283	0.00	0.00	689.860		
RECTA Rampa	176780.000	355037.106	4609351.406	0.000	689.865	689.865	20.405639	0.000	0.283	0.00	0.00	689.865		
RECTA Rampa	176800.000	355043.407	4609370.387	0.000	689.871	689.871	20.405639	0.000	0.283	0.00	0.00	689.871		
RECTA Rampa	176820.000	355049.709	4609389.369	0.000	689.877	689.877	20.405639	0.000	0.283	0.00	0.00	689.877		
RECTA Rampa	176840.000	355056.010	4609408.350	0.000	689.882	689.882	20.405639	0.000	0.283	0.00	0.00	689.882		

Istram 20.08.08.26 11/02/21 09:47:00 200009 pagina 3

PROYECTO : ESTUDIO INFORMATIVO DE LA INTEGRACION DEL FFCC EN VALLADOLID
GRUPO : 1 : ALTERNATIVA 1
EJE : 2 : VIA 2 UIC

* * * PUNTOS DEL EJE EN PLANTA * * *

TIPO	P.K.	X	Y	RADIO	Z RAS IZ.	Z RAS DR.	AZIMUT	DIST. EJE	PEN(o/oo)	PERAL_I	PERAL_D	HILO BAJO	ZT (eje)	Z TERR.
RECTA Rampa	176860.000	355062.312	4609427.331	0.000	689.888	689.888	20.405639	0.000	0.283	0.00	0.00	689.888		
CLOT. Rampa	176861.973	355062.933	4609429.204	-1000000.000	689.888	689.888	20.405639	0.000	0.283	0.00	0.00	689.888		
CLOT. Rampa	176880.000	355068.612	4609446.313	-33283.233	689.894	689.894	20.388399	0.000	0.283	0.00	0.00	689.894		
CLOT. Rampa	176900.000	355074.900	4609465.299	-15778.223	689.899	689.899	20.328924	0.000	0.283	0.00	0.00	689.899		
CIRC. Rampa	176901.973	355075.519	4609467.172	-15000.000	689.900	689.900	20.320757	0.000	0.283	0.00	0.00	689.900		
CIRC. Rampa	176920.000	355081.166	4609484.292	-15000.000	689.905	689.905	20.244247	0.000	0.283	0.00	0.00	689.905		
CIRC. Rampa	176940.000	355087.407	4609503.293	-15000.000	689.911	689.911	20.159365	0.000	0.283	0.00	0.00	689.911		
CIRC. Rampa	176960.000	355093.622	4609522.303	-15000.000	689.916	689.916	20.074482	0.000	0.283	0.00	0.00	689.916		
CIRC. Rampa	176980.000	355099.812	4609541.321	-15000.000	689.922	689.922	19.989600	0.000	0.283	0.00	0.00	689.922		
CLOT. Rampa	176990.296	355102.988	4609551.115	-15000.000	689.925	689.925	19.945903	0.000	0.283	0.00	0.00	689.925		
CLOT. Rampa	177000.000	355105.976	4609560.347	-19804.722	689.928	689.928	19.909713	0.000	0.283	0.00	0.00	689.928		
CLOT. Rampa	177020.000	355112.122	4609579.380	-58276.161	689.933	689.933	19.866644	0.000	0.283	0.00	0.00	689.933		
CLOT. Rampa	177030.296	355115.283	4609589.178	1000000.000	689.936	689.936	19.861020	0.000	0.283	0.00	0.00	689.936		
CLOT. Rampa	177040.000	355118.262	4609598.414	61828.932	689.939	689.939	19.866016	0.000	0.283	0.00	0.00	689.939		
CLOT. Rampa	177060.000	355124.407	4609617.446	20199.167	689.945	689.945	19.907830	0.000	0.283	0.00	0.00	689.945		
CIRC. Rampa	177070.296	355127.577	4609627.242	15000.000	689.947	689.947	19.945903	0.000	0.283	0.00	0.00	689.947		
CIRC. Rampa	177080.000	355130.571	4609636.473	15000.000	689.950	689.950	19.987089	0.000	0.283	0.00	0.00	689.950		
CIRC. Rampa	177100.000	355136.760	4609655.491	15000.000	689.956	689.956	20.071971	0.000	0.283	0.00	0.00	689.956		
CIRC. Rampa	177120.000	355142.975	4609674.501	15000.000	689.961	689.961	20.156854	0.000	0.283	0.00	0.00	689.961		
CIRC. Rampa	177140.000	355149.215	4609693.503	15000.000	689.967	689.967	20.241737	0.000	0.283	0.00	0.00	689.967		
CLOT. Rampa	177154.495	355153.753	4609707.269	15000.000	689.971	689.971	20.303253	0.000	0.283	0.00	0.00	689.971		
CLOT. Rampa	177160.000	355155.480	4609712.496	17394.069	689.973	689.973	20.325011	0.000	0.283	0.00	0.00	689.973		
CLOT. Rampa	177180.000	355161.766	4609731.483	41394.964	689.978	689.978	20.376990	0.000	0.283	0.00	0.00	689.978		
RECTA Rampa	177194.495	355166.328	4609745.240	0.000	689.983	689.983	20.388136	0.000	0.283	0.00	0.00	689.983		
RECTA Rampa	177200.000	355168.061	4609750.466	0.000	689.984	689.984	20.388136	0.000	0.283	0.00	0.00	689.984		
RECTA Rampa	177220.000	355174.358	4609769.449	0.000	689.990	689.990	20.388136	0.000	0.283	0.00	0.00	689.990		
RECTA Rampa	177240.000	355180.654	4609788.432	0.000	689.995	689.995	20.388136	0.000	0.283	0.00	0.00	689.995		
RECTA Rampa	177260.000	355186.950	4609807.415	0.000	690.001	690.001	20.388136	0.000	0.283	0.00	0.00	690.001		
RECTA Rampa	177280.000	355193.246	4609826.398	0.000	690.007	690.007	20.388136	0.000	0.283	0.00	0.00	690.007		
RECTA Rampa	177300.000	355199.542	4609845.381	0.000	690.012	690.012	20.388136	0.000	0.283	0.00	0.00	690.012		
RECTA Rampa	177320.000	355205.839	4609864.364	0.000	690.018	690.018	20.388136	0.000	0.283	0.00	0.00	690.018		
RECTA Rampa	177340.000	355212.135	4609883.348	0.000	690.024	690.024	20.388136	0.000	0.283	0.00	0.00	690.024		
RECTA Rampa	177360.000	355218.431	4609902.331	0.000	690.029	690.029	20.388136	0.000	0.283	0.00	0.00	690.029		
RECTA Rampa	177380.000	355224.727	4609921.314	0.000	690.035	690.035	20.388136	0.000	0.283	0.00	0.00	690.035		
RECTA Rampa	177400.000	355231.023	4609940.297	0.000	690.041	690.041	20.388136	0.000	0.283	0.00	0.00	690.041		
RECTA Rampa	177420.000	355237.320	4609959.280	0.000	690.046	690.046	20.388136	0.000	0.283	0.00	0.00	690.046		
RECTA Rampa	177440.000	355243.616	4609978.263	0.000	690.052	690.052	20.388136	0.000	0.283	0.00	0.00	690.052		
RECTA Rampa	177460.000	355249.912	4609997.246	0.000	690.058	690.058	20.388136	0.000	0.283	0.00	0.00	690.058		
RECTA Rampa	177480.000	355256.208	4610016.229	0.000	690.063	690.063	20.388136	0.000	0.283	0.00	0.00	690.063		
RECTA Rampa	177500.000	355262.504	4610035.212	0.000	690.069	690.069	20.388136	0.000	0.283	0.00	0.00	690.069		
RECTA Rampa	177520.000	355268.801	4610054.195	0.000	690.075	690.075	20.388136	0.000	0.283	0.00	0.00	690.075		
RECTA Rampa	177540.000	355275.097	4610073.179	0.000	690.080	690.080	20.388136	0.000	0.283	0.00	0.00	690.080		
RECTA Rampa	177560.000	355281.393	4610092.162	0.000	690.086	690.086	20.388136	0.000	0.283	0.00	0.00	690.086		
RECTA Rampa	177580.000	355287.689	4610111.145	0.000	690.092	690.092	20.388136	0.000	0.283	0.00	0.00	690.092		
CLOT. Rampa	177591.449	355291.293	4610122.011	1000000.000	690.095	690.095	20.388136	0.000	0.283	0.00	0.00	690.095		
CLOT. KV 130000	177600.000	355293.986	4610130.128	46776.563	690.097	690.097	20.393955	0.000	0.294	0.00	0.00	690.097		
CLOT. KV 130000	177620.000	355300.291	4610149.108	14009.874	690.105	690.105	20.453006	0.000	0.448	0.00	0.00	690.105		
CIRC. KV 130000	177631.449	355303.911	4610159.969	10000.000	690.110	690.110	20.515460	0.000	0.536	0.00	0.00	690.110		
CIRC. KV 130000	177640.000	355306.623	4610168.079	10000.000	690.115	690.115	20.569899	0.000	0.602	0.00	0.00	690.115		
CIRC. KV 130000	177660.000	355312.992	4610187.038	10000.000	690.129	690.129	20.697223	0.000	0.756	0.00	0.00	690.129		

Istram 20.08.08.26 11/02/21 09:47:00 200009 pagina 4

PROYECTO : ESTUDIO INFORMATIVO DE LA INTEGRACION DEL FFCC EN VALLADOLID
GRUPO : 1 : ALTERNATIVA 1
EJE : 2 : VIA 2 UIC

* * * PUNTOS DEL EJE EN PLANTA * * *

TIPO	P.K.	X	Y	RADIO	Z RAS IZ.	Z RAS DR.	AZIMUT	DIST. EJE	PEN(o/oo)	PERAL_I	PERAL_D	HILO BAJO	ZT (eje)	Z TERR.
CIRC. Rampa	177680.000	355319.399	4610205.984	10000.000	690.146	690.146	20.824547	0.000	0.883	0.00	0.00	690.146		
CIRC. Rampa	177700.000	355325.844	4610224.917	10000.000	690.163	690.163	20.951871	0.000	0.883	0.00	0.00	690.163		
CLOT. Rampa	177719.054	355332.020	4610242.942	10000.000	690.180	690.180	21.073173	0.000	0.883	0.00	0.00	690.180		
CLOT. Rampa	177720.000	355332.327	4610243.837	10242.212	690.181	690.181	21.079124	0.000	0.883	0.00	0.00	690.181		
CLOT. Rampa	177740.000	355338.845	4610262.745	20992.897	690.198	690.198	21.171606	0.000	0.883	0.00	0.00	690.198		
CLOT. Rampa	177759.054	355345.070	4610280.753	-1000000.000	690.215	690.215	21.200497	0.000	0.883	0.00	0.00	690.215		
CLOT. Rampa	177760.000	355345.380	4610281.647	-117316.865	690.216	690.216	21.200240	0.000	0.883	0.00	0.00	690.216		
CLOT. Rampa	177780.000	355351.905	4610300.553	-5298.127	690.234	690.234	21.074654	0.000	0.883	0.00	0.00	690.234		
CIRC. Rampa	177796.409	355357.208	4610316.082	-2970.800	690.248	690.248	20.800252	0.000	0.883	0.00	0.00	690.248		
CLOT. Rampa	177796.409	355357.208	4610316.082	-2970.800	690.248	690.248	20.800252	0.000	0.883	0.00	0.00	690.248		
CLOT. Rampa	177800.000	355358.358	4610319.483	-3286.753	690.251	690.251	20.727000	0.000	0.883	0.00	0.00	690.251		
CLOT. Rampa	177820.000	355364.709	4610338.448	-8062.588	690.269	690.269	20.454347	0.000	0.883	0.00	0.00	690.269		
RECTA Rampa	177833.764	355369.048	4610351.510	0.000	690.281	690.281	20.400007	0.000	0.883	0.00	0.00	690.281		
RECTA Rampa	177840.000	355371.012	4610357.429	0.000	690.287	690.287	20.400007	0.000	0.883	0.00	0.00	690.287		
RECTA Rampa	177860.000	355377.312	4610376.411	0.000	690.304	690.304	20.400007	0.000	0.883	0.00	0.00	690.304		
RECTA Rampa	177880.000	355383.612	4610395.393	0.000	690.322	690.322	20.400007	0.000	0.883	0.00	0.00	690.322		
RECTA Rampa	177900.000	355389.912	4610414.375	0.000	690.340	690.340	20.400007	0.000	0.883	0.00	0.00	690.340		
RECTA Rampa	177920.000	355396.211	4610433.356	0.000	690.357	690.357	20.400007	0.000	0.883	0.00	0.00	690.357		
RECTA Rampa	177940.000	355402.511	4610452.338	0.000	690.375	690.375	20.400007	0.000	0.883	0.00	0.00	690.375		
RECTA Rampa	177960.000	355408.811	4610471.320	0.000	690.393	690.393	20.400007	0.000	0.883	0.00	0.00	690.393		
RECTA Rampa	177980.000	355415.111	4610490.302	0.000	690.410	690.410	20.400007	0.000	0.883	0.00	0.00	690.410		
RECTA Rampa	178000.000	355421.410	4610509.284	0.000	690.428	690.428	20.400007	0.000	0.883	0.00	0.00	690.428		
RECTA Rampa	178020.000	355427.710	4610528.266	0.000	690.446	690.446	20.400007	0.000	0.883	0.00	0.00	690.446		
RECTA Rampa	178040.000	355434.010	4610547.248	0.000	690.463	690.463	20.400007	0.000	0.883	0.00	0.00	690.463		
RECTA Rampa	178060.000	355440.310	4610566.230	0.000	690.481	690.481	20.400007	0.000	0.883	0.00	0.00	690.481		
RECTA Rampa	178080.000	355446.609	4610585.212	0.000	690.499	690.499	20.400007	0.000	0.883	0.00	0.00	690.499		
RECTA Rampa	178100.000	355452.909	4610604.194	0.000	690.516	690.516	20.400007	0.000	0.883	0.00	0.00	690.516		
RECTA Rampa	178120.000	355459.209	4610623.176	0.000	690.534	690.534	20.400007	0.000	0.883	0.00	0.00	690.534		
RECTA Rampa	178140.000	355465.508	4610642.158	0.000	690.552	690.552	20.400007	0.000	0.883	0.00	0.00	690.552		
RECTA Rampa	178160.000	355471.808	4610661.140	0.000	690.569	690.569	20.400007	0.000	0.883	0.00	0.00	690.569		
RECTA Rampa	178180.000	355478.108	4610680.121	0.000	690.587	690.587	20.400007	0.000	0.883	0.00	0.00	690.587		
RECTA KV 80000	178200.000	355484.408	4610699.103	0.000	690.605	690.605	20.400007	0.000	1.001	0.00	0.00	690.605		
RECTA KV 80000	178220.000	355490.707	4610718.085	0.000	690.628	690.628	20.400007	0.000	1.251	0.00	0.00	690.628		
RECTA Rampa	178240.000	355497.007	4610737.067	0.000	690.655	690.655	20.400007	0.000	1.472	0.00	0.00	690.655		
RECTA Rampa	178260.000	355503.307	4610756.049	0.000	690.685	690.685	20.400007	0.000	1.472	0.00	0.00	690.685		
RECTA KV 60000	178280.000	355509.607	4610775.031	0.000	690.714	690.714	20.400007	0.000	1.537	0.00	0.00	690.714		
RECTA KV 60000	178300.000	355515.906	4610794.013	0.000	690.748	690.748	20.400007	0.000	1.870	0.00	0.00	690.748		
RECTA KV 60000	178320.000	355522.206	4610812.995	0.000	690.789	690.789	20.400007	0.000	2.204	0.00	0.00	690.789		
RECTA KV 60000	178340.000	355528.506	4610831.977	0.000	690.836	690.836	20.400007	0.000	2.537	0.00	0.00	690.836		
RECTA KV 60000	178360.000	355534.805	4610850.959	0.000	690.890	690.890	20.400007	0.000	2.870	0.00	0.00	690.890		
RECTA KV 60000	178380.000	355541.105	4610869.941	0.000	690.951	690.951	20.400007	0.000	3.204	0.00	0.00	690.951		
RECTA Rampa	178400.000	355547.405	4610888.923	0.000	691.019	691.019	20.400007	0.000	3.526	0.00	0.00	691.019		
RECTA Rampa	178420.000	355553.705	4610907.905	0.000	691.089	691.089	20.400007	0.000	3.526	0.00	0.00	691.089		
RECTA Rampa	178440.000	355560.004	4610926.886	0.000	691.160	691.160	20.400007	0.000	3.526	0.00	0.00	691.160		
RECTA Rampa	178460.000	355566.304	4610945.868	0.000	691.230	691.230	20.400007	0.000	3.526	0.00	0.00	691.230		
CLOT. Rampa	178474.294	355570.806	4610959.434	1000000.000	691.281	691.281	20.400007	0.000	3.526	0.00	0.00	691.281		
CLOT. Rampa	178480.000	355572.604	4610964.850	15434.442	691.301	691.301	20.411775	0.000	3.526	0.00	0.00	691.301		
CLOT. Rampa	178500.000	355578.934	4610983.822	3426.175	691.371	691.371	20.638833	0.000	3.526	0.00	0.00	691.371		
CLOT. Rampa	178520.000	355585.375	4611002.757	1926.964	691.442	691.442	21.155018	0.000	3.526	0.00	0.00	691.442		
CLOT. Rampa	178540.000	355592.011	4611021.623	1340.426	691.512	691.512	21.960331	0.000	3.526	0.00	0.00	691.512		

Istram 20.08.08.26 11/02/21 09:47:00 200009 pagina 5

PROYECTO : ESTUDIO INFORMATIVO DE LA INTEGRACION DEL FFCC EN VALLADOLID
GRUPO : 1 : ALTERNATIVA 1
EJE : 2 : VIA 2 UIC

* * * PUNTOS DEL EJE EN PLANTA * * *

TIPO	P.K.	X	Y	RADIO	Z RAS IZ.	Z RAS DR.	AZIMUT	DIST. EJE	PEN(o/oo)	PERAL_I	PERAL_D	HILO BAJO	ZT (eje)	Z TERR.
CLOT. Rampa	178560.000	355598.929	4611040.389	1027.631	691.583	691.583	23.054772	0.000	3.526	0.00	0.00	691.583		
CLOT. Rampa	178580.000	355606.210	4611059.016	833.200	691.653	691.653	24.438341	0.000	3.526	0.00	0.00	691.653		
CLOT. Rampa	178600.000	355613.936	4611077.462	700.637	691.724	691.724	26.111037	0.000	3.526	0.00	0.00	691.724		
CLOT. Rampa	178620.000	355622.185	4611095.681	604.466	691.794	691.794	28.072861	0.000	3.526	0.00	0.00	691.794		
CLOT. KV -64000	178640.000	355631.033	4611113.617	531.509	691.865	691.865	30.323814	0.000	3.429	0.00	0.00	691.865		
CIRC. KV -64000	178656.794	355638.975	4611128.412	482.600	691.920	691.920	32.437213	0.000	3.166	0.00	0.00	691.920		
CIRC. KV -64000	178660.000	355640.549	4611131.206	482.600	691.930	691.930	32.860178	0.000	3.116	0.00	0.00	691.930		
CIRC. KV -64000	178680.000	355650.777	4611148.391	482.600	691.989	691.989	35.498470	0.000	2.804	0.00	0.00	691.989		
CIRC. KV -64000	178700.000	355661.709	4611165.137	482.600	692.042	692.042	38.136762	0.000	2.491	0.00	0.00	692.042		
CIRC. KV -64000	178720.000	355673.325	4611181.416	482.600	692.089	692.089	40.775053	0.000	2.179	0.00	0.00	692.089		
CIRC. KV -64000	178740.000	355685.606	4611197.200	482.600	692.129	692.129	43.413345	0.000	1.866	0.00	0.00	692.129		
CIRC. KV -64000	178760.000	355698.530	4611212.462	482.600	692.163	692.163	46.051637	0.000	1.554	0.00	0.00	692.163		
CIRC. KV -64000	178780.000	355712.075	4611227.175	482.600	692.191	692.191	48.689928	0.000	1.241	0.00	0.00	692.191		
CIRC. KV -64000	178800.000	355726.218	4611241.314	482.600	692.213	692.213	51.328220	0.000	0.929	0.00	0.00	692.213		
CIRC. KV -64000	178820.000	355740.935	4611254.855	482.600	692.229	692.229	53.966511	0.000	0.616	0.00	0.00	692.229		
CIRC. KV -64000	178840.000	355756.200	4611267.774	482.600	692.238	692.238	56.604803	0.000	0.304	0.00	0.00	692.238		
CIRC. KV -64000	178860.000	355771.987	4611280.051	482.600	692.241	692.241	59.243095	0.000	-0.009	0.00	0.00	692.241		
CIRC. Pendiente	178880.000	355788.270	4611291.662	482.600	692.238	692.238	61.881386	0.000	-0.180	0.00	0.00	692.238		
CIRC. Pendiente	178900.000	355805.019	4611302.589	482.600	692.234	692.234	64.519678	0.000	-0.180	0.00	0.00	692.234		
CIRC. Pendiente	178920.000	355822.207	4611312.813	482.600	692.231	692.231	67.157970	0.000	-0.180	0.00	0.00	692.231		
CLOT. Pendiente	178934.995	355835.363	4611320.006	482.600	692.228	692.228	69.136027	0.000	-0.180	0.00	0.00	692.228		
CLOT. KV -60000	178940.000	355839.803	4611322.316	518.654	692.227	692.227	69.773313	0.000	-0.190	0.00	0.00	692.227		
CLOT. KV -60000	178960.000	355857.746	4611331.149	739.381	692.220	692.220	71.861777	0.000	-0.523	0.00	0.00	692.220		
CLOT. KV -60000	178980.000	355875.922	4611339.493	1287.172	692.206	692.206	73.217382	0.000	-0.856	0.00	0.00	692.206		
CLOT. Pendiente	179000.000	355894.225	4611347.554	4967.443	692.187	692.187	73.840129	0.000	-0.998	0.00	0.00	692.187		
RECTA Pendiente	179006.995	355900.639	4611350.345	0.000	692.180	692.180	73.884952	0.000	-0.998	0.00	0.00	692.180		
RECTA Pendiente	179020.000	355912.565	4611355.532	0.000	692.167	692.167	73.884952	0.000	-0.998	0.00	0.00	692.167		
RECTA Pendiente	179040.000	355930.906	4611363.508	0.000	692.147	692.147	73.884952	0.000	-0.998	0.00	0.00	692.147		
RECTA KV -43500	179060.000	355949.247	4611371.484	0.000	692.127	692.127	73.884952	0.000	-1.108	0.00	0.00	692.127		
RECTA KV -43500	179080.000	355967.587	4611379.460	0.000	692.100	692.100	73.884952	0.000	-1.567	0.00	0.00	692.100		
CIRC. Pendiente	179097.769	355983.883	4611386.547	-100000.000	692.070	692.070	73.884952	0.000	-1.776	0.00	0.00	692.070		
CIRC. Pendiente	179100.000	355985.928	4611387.436	-100000.000	692.066	692.066	73.883532	0.000	-1.776	0.00	0.00	692.066		
CIRC. Pendiente	179120.000	356004.268	4611395.414	-100000.000	692.030	692.030	73.870800	0.000	-1.776	0.00	0.00	692.030		
CIRC. Pendiente	179140.000	356022.606	4611403.396	-100000.000	691.995	691.995	73.858067	0.000	-1.776	0.00	0.00	691.995		
CIRC. Pendiente	179160.000	356040.943	4611411.382	-100000.000	691.959	691.959	73.845335	0.000	-1.776	0.00	0.00	691.959		
CIRC. KV 36300	179180.000	356059.278	4611419.372	-100000.000	691.927	691.927	73.832602	0.000	-1.352	0.00	0.00	691.927		
CIRC. KV 36300	179200.000	356077.611	4611427.365	-100000.000	691.905	691.905	73.819870	0.000	-0.801	0.00	0.00	691.905		
CIRC. Pendiente	179220.000	356095.943	4611435.361	-100000.000	691.893	691.893	73.807138	0.000	-0.511	0.00	0.00	691.893		
CIRC. Pendiente	179240.000	356114.273	4611443.362	-100000.000	691.883	691.883	73.794405	0.000	-0.511	0.00	0.00	691.883		
CIRC. Pendiente	179260.000	356132.601	4611451.366	-100000.000	691.873	691.873	73.781673	0.000	-0.511	0.00	0.00	691.873		
RECTA Pendiente	179264.227	356136.475	4611453.058	0.000	691.871	691.871	73.778982	0.000	-0.511	0.00	0.00	691.871		
RECTA Pendiente	179280.000	356150.929	4611459.372	0.000	691.863	691.863	73.778982	0.000	-0.511	0.00	0.00	691.863		
RECTA Pendiente	179300.000	356169.256	4611467.379	0.000	691.853	691.853	73.778982	0.000	-0.511	0.00	0.00	691.853		
RECTA Pendiente	179320.000	356187.584	4611475.385	0.000	691.842	691.842	73.778982	0.000	-0.511	0.00	0.00	691.842		
RECTA Pendiente	179340.000	356205.911	4611483.392	0.000	691.832	691.832	73.778982	0.000	-0.511	0.00	0.00	691.832		
RECTA Pendiente	179360.000	356224.238	4611491.399	0.000	691.822	691.822	73.778982	0.000	-0.511	0.00	0.00	691.822		
RECTA Pendiente	179380.000	356242.566	4611499.405	0.000	691.812	691.812	73.778982	0.000	-0.511	0.00	0.00	691.812		
CIRC. KV 38700	179393.090	356254.561	4611504.646	50000.000	691.807	691.807	73.778982	0.000	-0.236	0.00	0.00	691.807		
CIRC. KV 38700	179400.000	356260.893	4611507.412	50000.000	691.806	691.806	73.787780	0.000	-0.058	0.00	0.00	691.806		
CIRC. KV 38700	179420.000	356279.223	4611515.412	50000.000	691.810	691.810	73.813245	0.000	0.459	0.00	0.00	691.810		

Istram 20.08.08.26 11/02/21 09:47:00 200009 pagina 6
PROYECTO : ESTUDIO INFORMATIVO DE LA INTEGRACION DEL FFCC EN VALLADOLID
GRUPO : 1 : ALTERNATIVA 1
EJE : 2 : VIA 2 UIC

* * * PUNTOS DEL EJE EN PLANTA * * *

TIPO	P.K.	X	Y	RADIO	Z RAS IZ.	Z RAS DR.	AZIMUT	DIST. EJE	PEN(o/oo)	PERAL_I	PERAL_D	HILO BAJO	ZT (eje)	Z TERR.
CIRC. KV 38700	179440.000	356297.557	4611523.405	50000.000	691.824	691.824	73.838709	0.000	0.976	0.00	0.00	691.824		
CIRC. KV 38700	179447.412	356304.352	4611526.366	-100000.000	691.832	691.832	73.848147	0.000	1.167	0.00	0.00	691.832		
CIRC. KV 38700	179460.000	356315.892	4611531.393	-100000.000	691.849	691.849	73.840133	0.000	1.492	0.00	0.00	691.849		
CIRC. KV 38700	179480.000	356334.227	4611539.384	-100000.000	691.884	691.884	73.827401	0.000	2.009	0.00	0.00	691.884		
CIRC. Rampa	179500.000	356352.559	4611547.378	-100000.000	691.929	691.929	73.814668	0.000	2.475	0.00	0.00	691.929		
CIRC. Rampa	179520.000	356370.890	4611555.377	-100000.000	691.978	691.978	73.801936	0.000	2.475	0.00	0.00	691.978		
CIRC. Rampa	179540.000	356389.220	4611563.378	-100000.000	692.028	692.028	73.789204	0.000	2.475	0.00	0.00	692.028		
RECTA Rampa	179551.538	356399.794	4611567.997	0.000	692.056	692.056	73.781858	0.000	2.475	0.00	0.00	692.056		
RECTA Rampa	179560.000	356407.548	4611571.384	0.000	692.077	692.077	73.781858	0.000	2.475	0.00	0.00	692.077		
RECTA Rampa	179580.000	356425.876	4611579.389	0.000	692.127	692.127	73.781858	0.000	2.475	0.00	0.00	692.127		
CLOT. Rampa	179597.136	356441.579	4611586.249	-1000000.000	692.169	692.169	73.781858	0.000	2.475	0.00	0.00	692.169		
CLOT. Rampa	179600.000	356444.203	4611587.396	-4189.686	692.176	692.176	73.760098	0.000	2.475	0.00	0.00	692.176		
CIRC. KV -14600	179617.136	356459.862	4611594.356	-600.000	692.211	692.211	72.720825	0.000	1.420	0.00	0.00	692.211		
CIRC. KV -14600	179620.000	356462.464	4611595.552	-600.000	692.214	692.214	72.416927	0.000	1.223	0.00	0.00	692.214		
CLOT. Rampa	179637.238	356478.003	4611603.013	-600.000	692.226	692.226	70.587952	0.000	0.406	0.00	0.00	692.226		
CLOT. Rampa	179640.000	356480.473	4611604.250	-696.149	692.227	692.227	70.315101	0.000	0.406	0.00	0.00	692.227		
CLOT. Rampa	179657.238	356495.806	4611612.126	1000000.000	692.234	692.234	69.526919	0.000	0.406	0.00	0.00	692.234		
CLOT. Rampa	179660.000	356498.258	4611613.399	4344.174	692.236	692.236	69.547159	0.000	0.406	0.00	0.00	692.236		
CIRC. Rampa	179677.238	356513.608	4611621.240	600.000	692.243	692.243	70.587952	0.000	0.406	0.00	0.00	692.243		
CIRC. Rampa	179680.000	356516.084	4611622.465	600.000	692.244	692.244	70.881043	0.000	0.406	0.00	0.00	692.244		
CLOT. KV 97500	179696.706	356531.173	4611629.633	600.000	692.251	692.251	72.653557	0.000	0.548	0.00	0.00	692.251		
CLOT. KV 97500	179700.000	356534.172	4611630.997	718.324	692.253	692.253	72.974320	0.000	0.582	0.00	0.00	692.253		
RECTA Rampa	179716.706	356549.447	4611637.760	0.000	692.264	692.264	73.714590	0.000	0.718	0.00	0.00	692.264		
RECTA Rampa	179720.000	356552.465	4611639.082	0.000	692.267	692.267	73.714590	0.000	0.718	0.00	0.00	692.267		
RECTA Rampa	179740.000	356570.784	4611647.107	0.000	692.281	692.281	73.714590	0.000	0.718	0.00	0.00	692.281		
CIRC. Rampa	179758.362	356587.603	4611654.475	380.000	692.294	692.294	73.714590	0.000	0.718	0.00	0.00	692.294		
CIRC. Rampa	179760.000	356589.105	4611655.129	380.000	692.295	692.295	73.988962	0.000	0.718	0.00	0.00	692.295		
CIRC. Rampa	179780.000	356607.659	4611662.588	380.000	692.310	692.310	77.339592	0.000	0.718	0.00	0.00	692.310		
CIRC. Rampa	179792.651	356619.589	4611666.799	-500.000	692.319	692.319	79.459100	0.000	0.718	0.00	0.00	692.319		
CIRC. Rampa	179800.000	356626.541	4611669.180	-500.000	692.324	692.324	78.523447	0.000	0.718	0.00	0.00	692.324		
CIRC. Rampa	179820.000	356645.276	4611676.176	-500.000	692.339	692.339	75.976967	0.000	0.718	0.00	0.00	692.339		
RECTA Rampa	179834.881	356659.027	4611681.864	0.000	692.349	692.349	74.082213	0.000	0.718	0.00	0.00	692.349		
RECTA Rampa	179840.000	356663.727	4611683.891	0.000	692.353	692.353	74.082213	0.000	0.718	0.00	0.00	692.353		
RECTA KV 100000	179860.000	356682.092	4611691.810	0.000	692.368	692.368	74.082213	0.000	0.868	0.00	0.00	692.368		
RECTA Rampa	179880.000	356700.458	4611699.729	0.000	692.388	692.388	74.082213	0.000	1.041	0.00	0.00	692.388		
RECTA Rampa	179900.000	356718.823	4611707.648	0.000	692.408	692.408	74.082213	0.000	1.041	0.00	0.00	692.408		
RECTA Rampa	179920.000	356737.188	4611715.568	0.000	692.429	692.429	74.082213	0.000	1.041	0.00	0.00	692.429		
RECTA Rampa	179940.000	356755.554	4611723.487	0.000	692.450	692.450	74.082213	0.000	1.041	0.00	0.00	692.450		
RECTA KV 42000	179960.000	356773.919	4611731.406	0.000	692.472	692.472	74.082213	0.000	1.222	0.00	0.00	692.472		
CIRC. KV 42000	179973.641	356786.445	4611736.807	-50000.000	692.490	692.490	74.082213	0.000	1.547	0.00	0.00	692.490		
CIRC. KV 42000	179980.000	356792.284	4611739.326	-50000.000	692.501	692.501	74.074116	0.000	1.698	0.00	0.00	692.501		
CIRC. KV 42000	180000.000	356810.647	4611747.251	-50000.000	692.540	692.540	74.048651	0.000	2.174	0.00	0.00	692.540		
CIRC. KV 42000	180003.324	356813.699	4611748.569	50000.000	692.547	692.547	74.044419	0.000	2.253	0.00	0.00	692.547		
CIRC. KV 42000	180020.000	356829.009	4611755.179	50000.000	692.588	692.588	74.065651	0.000	2.651	0.00	0.00	692.588		
RECTA KV 42000	180029.674	356837.892	4611759.011	0.000	692.615	692.615	74.077968	0.000	2.881	0.00	0.00	692.615		
RECTA KV 42000	180040.000	356847.373	4611763.100	0.000	692.646	692.646	74.077968	0.000	3.127	0.00	0.00	692.646		
RECTA KV 42000	180060.000	356865.738	4611771.020	0.000	692.713	692.713	74.077968	0.000	3.603	0.00	0.00	692.713		
RECTA KV 42000	180080.000	356884.103	4611778.941	0.000	692.790	692.790	74.077968	0.000	4.079	0.00	0.00	692.790		
RECTA KV 42000	180100.000	356902.468	4611786.861	0.000	692.876	692.876	74.077968	0.000	4.555	0.00	0.00	692.876		
RECTA Rampa	180109.676	356911.352	4611790.693	0.000	692.921	692.921	74.077968	0.000	4.610	0.00	0.00	692.921		

Istram 20.08.08.26 11/02/21 09:47:45 200009 pagina 1
PROYECTO : ESTUDIO INFORMATIVO DE LA INTEGRACION DEL FFCC EN VALLADOLID

GRUPO : 1 : ALTERNATIVA 1
EJE : 23 : VIA 2 UIC TRAMO CABECERA NORTE

* * * PUNTOS DEL EJE EN PLANTA * * *

TIPO	P.K.	X	Y	RADIO	Z RAS IZ.	Z RAS DR.	AZIMUT	DIST. EJE	PEN(o/oo)	PERAL_I	PERAL_D	HILO BAJO	ZT (eje)	Z TERR.
RECTA Rampa	0.000	356910.427	4611790.293	0.000	692.984	692.984	74.078000	0.000	4.352	0.00	0.00	692.984		
CLOT. Rampa	15.079	356924.273	4611796.265	-1000000.000	693.050	693.050	74.078000	0.000	4.352	0.00	0.00	693.050		
CLOT. Rampa	20.000	356928.792	4611798.214	-27372.755	693.072	693.072	74.072278	0.000	4.352	0.00	0.00	693.072		
CLOT. Rampa	40.000	356947.149	4611806.151	-5404.736	693.159	693.159	73.931231	0.000	4.352	0.00	0.00	693.159		
CLOT. Rampa	60.000	356965.477	4611814.157	-2998.383	693.246	693.246	73.601121	0.000	4.352	0.00	0.00	693.246		
CLOT. Rampa	80.000	356983.750	4611822.285	-2074.674	693.333	693.333	73.081947	0.000	4.352	0.00	0.00	693.333		
CLOT. Rampa	100.000	357001.945	4611830.589	-1586.059	693.420	693.420	72.373710	0.000	4.352	0.00	0.00	693.420		
CLOT. Rampa	120.000	357020.034	4611839.121	-1283.724	693.507	693.507	71.476408	0.000	4.352	0.00	0.00	693.507		
CLOT. Rampa	140.000	357037.987	4611847.934	-1078.197	693.594	693.594	70.390044	0.000	4.352	0.00	0.00	693.594		
CIRC. Rampa	155.380	357051.682	4611854.934	-960.000	693.661	693.661	69.425999	0.000	4.352	0.00	0.00	693.661		
CIRC. Rampa	160.000	357055.774	4611857.079	-960.000	693.681	693.681	69.119658	0.000	4.352	0.00	0.00	693.681		
CIRC. Rampa	180.000	357073.368	4611866.587	-960.000	693.768	693.768	67.793367	0.000	4.352	0.00	0.00	693.768		
CIRC. Rampa	200.000	357090.761	4611876.461	-960.000	693.855	693.855	66.467076	0.000	4.352	0.00	0.00	693.855		
CIRC. Rampa	220.000	357107.944	4611886.695	-960.000	693.942	693.942	65.140785	0.000	4.352	0.00	0.00	693.942		
CIRC. Rampa	240.000	357124.910	4611897.284	-960.000	694.029	694.029	63.814494	0.000	4.352	0.00	0.00	694.029		
CIRC. Rampa	260.000	357141.652	4611908.224	-960.000	694.116	694.116	62.488203	0.000	4.352	0.00	0.00	694.116		
CIRC. Rampa	280.000	357158.162	4611919.511	-960.000	694.203	694.203	61.161911	0.000	4.352	0.00	0.00	694.203		
CIRC. Rampa	300.000	357174.434	4611931.140	-960.000	694.290	694.290	59.835620	0.000	4.352	0.00	0.00	694.290		
CIRC. KV -199417	320.000	357190.460	4611943.104	-960.000	694.377	694.377	58.509329	0.000	4.283	0.00	0.00	694.377		
CIRC. KV -199417	340.000	357206.233	4611955.401	-960.000	694.461	694.461	57.183038	0.000	4.182	0.00	0.00	694.461		
CIRC. KV -199417	360.000	357221.746	4611968.022	-960.000	694.544	694.544	55.856747	0.000	4.082	0.00	0.00	694.544		
CIRC. KV -199417	380.000	357236.994	4611980.965	-960.000	694.625	694.625	54.530455	0.000	3.982	0.00	0.00	694.625		
CIRC. Rampa	400.000	357251.968	4611994.222	-960.000	694.704	694.704	53.204164	0.000	3.950	0.00	0.00	694.704		
CIRC. Rampa	420.000	357266.663	4612007.788	-960.000	694.783	694.783	51.877873	0.000	3.950	0.00	0.00	694.783		
CIRC. Rampa	440.000	357281.072	4612021.658	-960.000	694.862	694.862	50.551582	0.000	3.950	0.00	0.00	694.862		
CIRC. Rampa	460.000	357295.189	4612035.825	-960.000	694.941	694.941	49.225291	0.000	3.950	0.00	0.00	694.941		
CIRC. Rampa	480.000	357309.008	4612050.282	-960.000	695.020	695.020	47.898999	0.000	3.950	0.00	0.00	695.020		
CIRC. KV 124590	500.000	357322.523	4612065.025	-960.000	695.100	695.100	46.572708	0.000	4.106	0.00	0.00	695.100		
CIRC. KV 124590	520.000	357335.727	4612080.045	-960.000	695.184	695.184	45.246417	0.000	4.266	0.00	0.00	695.184		
CIRC. KV 124590	540.000	357348.616	4612095.338	-960.000	695.271	695.271	43.920126	0.000	4.427	0.00	0.00	695.271		
CIRC. KV 124590	560.000	357361.184	4612110.896	-960.000	695.361	695.361	42.593835	0.000	4.587	0.00	0.00	695.361		
CIRC. KV 124590	580.000	357373.425	4612126.712	-960.000	695.454	695.454	41.267543	0.000	4.748	0.00	0.00	695.454		
CIRC. Rampa	600.000	357385.333	4612142.779	-960.000	695.551	695.551	39.941252	0.000	4.838	0.00	0.00	695.551		
CIRC. Rampa	620.000	357396.904	4612159.092	-960.000	695.647	695.647	38.614961	0.000	4.838	0.00	0.00	695.647		
CIRC. Rampa	640.000	357408.133	4612175.642	-960.000	695.744	695.744	37.288670	0.000	4.838	0.00	0.00	695.744		
CLOT. Rampa	654.148	357415.867	4612187.488	-960.000	695.813	695.813	36.350464	0.000	4.838	0.00	0.00	695.813		
CLOT. Rampa	660.000	357419.015	4612192.422	-1001.786	695.841	695.841	35.970473	0.000	4.838	0.00	0.00	695.841		
CLOT. Rampa	680.000	357429.563	4612209.414	-1176.849	695.938	695.938	34.794035	0.000	4.838	0.00	0.00	695.938		
CLOT. KV -101429	700.000	357439.821	4612226.583	-1426.052	696.033	696.033	33.806661	0.000	4.696	0.00	0.00	696.033		
CLOT. KV -101429	720.000	357449.836	4612243.894	-1809.148	696.125	696.125	33.008351	0.000	4.499	0.00	0.00	696.125		
CLOT. KV -101429	740.000	357459.660	4612261.315	-2473.679	696.213	696.213	32.399104	0.000	4.302	0.00	0.00	696.213		
CLOT. KV -101429	760.000	357469.343	4612278.815	-3909.826	696.297	696.297	31.978921	0.000	4.105	0.00	0.00	696.297		
CLOT. KV -101429	780.000	357478.936	4612296.364	-9321.781	696.378	696.378	31.747802	0.000	3.908	0.00	0.00	696.378		
RECTA Rampa	794.449	357485.840	4612309.056	0.000	696.434	696.434	31.698463	0.000	3.880	0.00	0.00	696.434		
CIRC. Rampa	795.978	357486.571	4612310.400	250.000	696.440	696.440	31.698463	0.000	3.880	0.00	0.00	696.440		
CIRC. Rampa	800.000	357488.520	4612313.918	250.000	696.455	696.455	32.722624	0.000	3.880	0.00	0.00	696.455		
RECTA Rampa	817.787	357497.808	4612329.082	0.000	696.524	696.524	37.251986	0.000	3.880	0.00	0.00	696.524		
RECTA Rampa	820.000	357499.031	4612330.927	0.000	696.533	696.533	37.251986	0.000	3.880	0.00	0.00	696.533		
RECTA Rampa	836.411	357508.095	4612344.608	0.000	696.597	696.597	37.251986	0.000	3.880	0.00	0.00	696.597		

Istram 20.08.08.26 11/02/21 09:47:23 200009 pagina 1
PROYECTO : ESTUDIO INFORMATIVO DE LA INTEGRACION DEL FFCC EN VALLADOLID
GRUPO : 1 : ALTERNATIVA 1
EJE : 32 : VÍA 3 UIC

* * * PUNTOS DEL EJE EN PLANTA * * *

TIPO	P.K.	X	Y	RADIO	Z RAS IZ.	Z RAS DR.	AZIMUT	DIST. EJE	PEN(o/oo)	PERAL_I	PERAL_D	HILO BAJO	ZT (eje)	Z TERR.
RECTA Pendiente	179028.926	355927.914	4611355.732	0.000	692.153	692.153	80.859629	0.000	-1.013	0.00	0.00	692.153		
CIRC. Pendiente	179032.173	355931.016	4611356.694	250.000	692.150	692.150	80.859629	0.000	-1.013	0.00	0.00	692.150		
CIRC. Pendiente	179040.000	355938.527	4611358.894	250.000	692.142	692.142	82.852699	0.000	-1.013	0.00	0.00	692.142		
CIRC. KV 30000	179051.657	355949.831	4611361.733	-250.000	692.131	692.131	85.821035	0.000	-0.724	0.00	0.00	692.131		
CIRC. KV 30000	179060.000	355957.936	4611363.711	-250.000	692.127	692.127	83.696413	0.000	-0.446	0.00	0.00	692.127		
CIRC. Pendiente	179080.000	355977.061	4611369.546	-250.000	692.121	692.121	78.603455	0.000	-0.224	0.00	0.00	692.121		
RECTA Pendiente	179099.096	355994.830	4611376.526	0.000	692.117	692.117	73.740812	0.000	-0.224	0.00	0.00	692.117		
RECTA Pendiente	179100.000	355995.659	4611376.888	0.000	692.117	692.117	73.740812	0.000	-0.224	0.00	0.00	692.117		
RECTA Pendiente	179120.000	356013.981	4611384.906	0.000	692.112	692.112	73.740812	0.000	-0.224	0.00	0.00	692.112		
RECTA Pendiente	179140.000	356032.304	4611392.923	0.000	692.108	692.108	73.740812	0.000	-0.224	0.00	0.00	692.108		
RECTA KV -13000	179160.000	356050.627	4611400.941	0.000	692.099	692.099	73.740812	0.000	-1.058	0.00	0.00	692.099		
RECTA Pendiente	179180.000	356068.949	4611408.959	0.000	692.063	692.063	73.740812	0.000	-2.229	0.00	0.00	692.063		
RECTA Pendiente	179200.000	356087.272	4611416.976	0.000	692.019	692.019	73.740812	0.000	-2.229	0.00	0.00	692.019		
RECTA Pendiente	179220.000	356105.594	4611424.994	0.000	691.974	691.974	73.740812	0.000	-2.229	0.00	0.00	691.974		
RECTA Pendiente	179240.000	356123.917	4611433.011	0.000	691.930	691.930	73.740812	0.000	-2.229	0.00	0.00	691.930		
RECTA Pendiente	179260.000	356142.240	4611441.029	0.000	691.885	691.885	73.740812	0.000	-2.229	0.00	0.00	691.885		
RECTA KV 10000	179280.000	356160.562	4611449.047	0.000	691.846	691.846	73.740812	0.000	-1.132	0.00	0.00	691.846		
RECTA Horizontal	179300.000	356178.885	4611457.064	0.000	691.840	691.840	73.740812	0.000	0.000	0.00	0.00	691.840		
RECTA Horizontal	179320.000	356197.207	4611465.082	0.000	691.840	691.840	73.740812	0.000	0.000	0.00	0.00	691.840		
RECTA Horizontal	179340.000	356215.530	4611473.100	0.000	691.840	691.840	73.740812	0.000	0.000	0.00	0.00	691.840		
CIRC. Horizontal	179349.481	356224.216	4611476.900	-1100.000	691.840	691.840	73.740812	0.000	0.000	0.00	0.00	691.840		
CIRC. KV 40000	179360.000	356233.832	4611481.163	-1100.000	691.841	691.841	73.132026	0.000	0.184	0.00	0.00	691.841		
CIRC. KV 40000	179380.000	356252.002	4611489.521	-1100.000	691.849	691.849	71.974536	0.000	0.684	0.00	0.00	691.849		
CIRC. KV 40000	179385.398	356256.879	4611491.833	8000.000	691.853	691.853	71.662141	0.000	0.819	0.00	0.00	691.853		
CIRC. KV 40000	179400.000	356270.064	4611498.109	8000.000	691.868	691.868	71.778341	0.000	1.184	0.00	0.00	691.868		
RECTA Rampa	179419.284	356287.495	4611506.359	0.000	691.895	691.895	71.931800	0.000	1.582	0.00	0.00	691.895		
RECTA Rampa	179420.000	356288.142	4611506.665	0.000	691.897	691.897	71.931800	0.000	1.582	0.00	0.00	691.897		
RECTA Rampa	179440.000	356306.229	4611515.200	0.000	691.928	691.928	71.931800	0.000	1.582	0.00	0.00	691.928		
CLOT. Rampa	179443.660	356309.539	4611516.761	1000000.000	691.934	691.934	71.931800	0.000	1.582	0.00	0.00	691.934		
CLOT. Rampa	179460.000	356324.325	4611523.716	2203.143	691.960	691.960	72.167884	0.000	1.582	0.00	0.00	691.960		
CIRC. Rampa	179463.660	356327.642	4611525.263	1800.000	691.966	691.966	72.285478	0.000	1.582	0.00	0.00	691.966		
CIRC. Rampa	179480.000	356342.489	4611532.086	1800.000	691.991	691.991	72.863397	0.000	1.582	0.00	0.00	691.991		
CIRC. Rampa	179500.000	356360.745	4611540.254	1800.000	692.023	692.023	73.570753	0.000	1.582	0.00	0.00	692.023		
CLOT. Rampa	179506.061	356366.296	4611542.690	1800.000	692.033	692.033	73.785122	0.000	1.582	0.00	0.00	692.033		
CLOT. Rampa	179520.000	356379.086	4611548.231	5939.455	692.055	692.055	74.106317	0.000	1.582	0.00	0.00	692.055		
RECTA Rampa	179526.061	356384.653	4611550.627	0.000	692.064	692.064	74.138800	0.000	1.582	0.00	0.00	692.064		
RECTA Rampa	179540.000	356397.458	4611556.134	0.000	692.086	692.086	74.138800	0.000	1.582	0.00	0.00	692.086		
RECTA Rampa	179560.000	356415.830	4611564.037	0.000	692.118	692.118	74.138800	0.000	1.582	0.00	0.00	692.118		
RECTA Rampa	179580.000	356434.203	4611571.940	0.000	692.150	692.150	74.138800	0.000	1.582	0.00	0.00	692.150		
CLOT. Rampa	179599.933	356452.513	4611579.817	-1000000.000	692.181	692.181	74.138800	0.000	1.582	0.00	0.00	692.181		
CLOT. Rampa	179600.000	356452.575	4611579.843	-178008.942	692.181	692.181	74.138788	0.000	1.582	0.00	0.00	692.181		
CIRC. Rampa	179619.933	356470.841	4611587.821	-600.000	692.213	692.213	73.077767	0.000	1.582	0.00	0.00	692.213		
CIRC. Rampa	179620.000	356470.903	4611587.849	-600.000	692.213	692.213	73.070614	0.000	1.582	0.00	0.00	692.213		
CIRC. KV -50000	179640.000	356488.999	4611596.362	-600.000	692.241	692.241	70.948548	0.000	1.210	0.00	0.00	692.241		
CLOT. KV -50000	179646.182	356494.534	4611599.114	-600.000	692.248	692.248	70.292671	0.000	1.086	0.00	0.00	692.248		
CLOT. KV -50000	179660.000	356506.820	4611605.440	-1941.276	692.261	692.261	69.332996	0.000	0.810	0.00	0.00	692.261		
RECTA KV -50000	179666.182	356512.295	4611608.310	0.000	692.266	692.266	69.231638	0.000	0.686	0.00	0.00	692.266		
RECTA KV -50000	179680.000	356524.530	4611614.731	0.000	692.274	692.274	69.231638	0.000	0.410	0.00	0.00	692.274		
RECTA Rampa	179700.000	356542.240	4611624.025	0.000	692.281	692.281	69.231638	0.000	0.348	0.00	0.00	692.281		
RECTA Rampa	179720.000	356559.949	4611633.320	0.000	692.288	692.288	69.231638	0.000	0.348	0.00	0.00	692.288		

Istram 20.08.08.26 11/02/21 09:47:23 200009 pagina 2
PROYECTO : ESTUDIO INFORMATIVO DE LA INTEGRACION DEL FFCC EN VALLADOLID
GRUPO : 1 : ALTERNATIVA 1
EJE : 32 : VÍA 3 UIC

* * * PUNTOS DEL EJE EN PLANTA * * *

TIPO	P.K.	X	Y	RADIO	Z RAS IZ.	Z RAS DR.	AZIMUT	DIST. EJE	PEN(o/oo)	PERAL_I	PERAL_D	HILO BAJO	ZT (eje)	Z TERR.
RECTA Rampa	179740.000	356577.658	4611642.614	0.000	692.295	692.295	69.231638	0.000	0.348	0.00	0.00	692.295		
RECTA Rampa	179743.039	356580.349	4611644.026	0.000	692.296	692.296	69.231638	0.000	0.348	0.00	0.00	692.296		

Istram 20.08.08.26 11/02/21 09:48:11 200009 pagina 1
PROYECTO : ESTUDIO INFORMATIVO DE LA INTEGRACION DEL FFCC EN VALLADOLID
GRUPO : 1 : ALTERNATIVA 1
EJE : 42 : VIA 2 BIFURCACION NORTE

* * * PUNTOS DEL EJE EN PLANTA * * *

TIPO	P.K.	X	Y	RADIO	Z RAS IZ.	Z RAS DR.	AZIMUT	DIST. EJE	PEN(o/oo)	PERAL_I	PERAL_D	HILO BAJO	ZT (eje)	Z TERR.
RECTA Rampa	0.000	360664.074	4618168.041	0.000	697.937	697.937	32.921006	0.000	0.023	0.00	0.00	697.937		
CLOT. Rampa	4.593	360666.345	4618172.033	1000000.000	697.937	697.937	32.921006	0.000	0.023	0.00	0.00	697.937		
CLOT. Rampa	20.000	360673.962	4618185.426	64336.926	697.937	697.937	32.928629	0.000	0.023	0.00	0.00	697.937		
CLOT. KV 10600	40.000	360683.856	4618202.808	27995.987	697.940	697.940	32.961264	0.000	0.642	0.00	0.00	697.940		
CLOT. KV 10600	60.000	360693.762	4618220.182	17890.484	697.971	697.971	33.019588	0.000	2.529	0.00	0.00	697.971		
CLOT. KV 10600	80.000	360703.687	4618237.545	13145.464	698.041	698.041	33.103601	0.000	4.415	0.00	0.00	698.041		
CLOT. KV 10600	100.000	360713.639	4618254.894	10389.815	698.148	698.148	33.213304	0.000	6.302	0.00	0.00	698.148		
CLOT. KV 10600	120.000	360723.624	4618272.223	8589.270	698.293	698.293	33.348695	0.000	8.189	0.00	0.00	698.293		
CLOT. KV 10600	140.000	360733.650	4618289.528	7320.614	698.475	698.475	33.509776	0.000	10.076	0.00	0.00	698.475		
CLOT. KV 10600	160.000	360743.722	4618306.807	6378.495	698.696	698.696	33.696545	0.000	11.963	0.00	0.00	698.696		
CLOT. KV 10600	180.000	360753.849	4618324.053	5651.217	698.954	698.954	33.909004	0.000	13.849	0.00	0.00	698.954		
CLOT. KV 10600	200.000	360764.037	4618341.264	5072.814	699.250	699.250	34.147153	0.000	15.736	0.00	0.00	699.250		
CLOT. KV 10600	220.000	360774.293	4618358.434	4601.816	699.583	699.583	34.410990	0.000	17.623	0.00	0.00	699.583		
CLOT. KV 10600	240.000	360784.623	4618375.560	4210.850	699.955	699.955	34.700517	0.000	19.510	0.00	0.00	699.955		
CLOT. KV 10600	260.000	360795.034	4618392.636	3881.114	700.364	700.364	35.015732	0.000	21.397	0.00	0.00	700.364		
CLOT. Rampa	280.000	360805.533	4618409.659	3599.269	700.797	700.797	35.356637	0.000	21.655	0.00	0.00	700.797		
CLOT. Rampa	300.000	360816.127	4618426.623	3355.587	701.230	701.230	35.723231	0.000	21.655	0.00	0.00	701.230		
CLOT. Rampa	320.000	360826.822	4618443.523	3142.809	701.663	701.663	36.115515	0.000	21.655	0.00	0.00	701.663		
CIRC. Rampa	335.273	360835.061	4618456.384	2997.650	701.994	701.994	36.432389	0.000	21.655	0.00	0.00	701.994		
CIRC. Rampa	340.000	360837.623	4618460.355	2997.650	702.096	702.096	36.532770	0.000	21.655	0.00	0.00	702.096		
CIRC. Rampa	360.000	360848.537	4618477.115	2997.650	702.529	702.529	36.957515	0.000	21.655	0.00	0.00	702.529		
CIRC. Rampa	380.000	360859.562	4618493.802	2997.650	702.962	702.962	37.382261	0.000	21.655	0.00	0.00	702.962		
CIRC. Rampa	400.000	360870.698	4618510.415	2997.650	703.395	703.395	37.807007	0.000	21.655	0.00	0.00	703.395		
CIRC. Rampa	420.000	360881.945	4618526.953	2997.650	703.828	703.828	38.231753	0.000	21.655	0.00	0.00	703.828		
CIRC. Rampa	440.000	360893.301	4618543.416	2997.650	704.261	704.261	38.656499	0.000	21.655	0.00	0.00	704.261		
CIRC. Rampa	460.000	360904.768	4618559.802	2997.650	704.694	704.694	39.081245	0.000	21.655	0.00	0.00	704.694		
CIRC. KV -20360	480.000	360916.343	4618576.112	2997.650	705.126	705.126	39.505991	0.000	21.290	0.00	0.00	705.126		
CIRC. KV -20360	500.000	360928.027	4618592.344	2997.650	705.542	705.542	39.930737	0.000	20.308	0.00	0.00	705.542		
CIRC. KV -20360	520.000	360939.819	4618608.498	2997.650	705.938	705.938	40.355483	0.000	19.325	0.00	0.00	705.938		
CIRC. KV -20360	540.000	360951.719	4618624.573	2997.650	706.315	706.315	40.780229	0.000	18.343	0.00	0.00	706.315		
CIRC. KV -20360	560.000	360963.725	4618640.568	2997.650	706.672	706.672	41.204974	0.000	17.361	0.00	0.00	706.672		
CIRC. KV -20360	580.000	360975.838	4618656.483	2997.650	707.010	707.010	41.629720	0.000	16.378	0.00	0.00	707.010		
CIRC. KV -20360	600.000	360988.057	4618672.316	2997.650	707.327	707.327	42.054466	0.000	15.396	0.00	0.00	707.327		
CIRC. KV -20360	620.000	361000.381	4618688.068	2997.650	707.625	707.625	42.479212	0.000	14.414	0.00	0.00	707.625		
CIRC. KV -20360	640.000	361012.810	4618703.737	2997.650	707.904	707.904	42.903958	0.000	13.431	0.00	0.00	707.904		
CIRC. KV -20360	660.000	361025.344	4618719.322	2997.650	708.163	708.163	43.328704	0.000	12.449	0.00	0.00	708.163		
CIRC. KV -20360	680.000	361037.981	4618734.824	2997.650	708.402	708.402	43.753450	0.000	11.467	0.00	0.00	708.402		
CIRC. KV -20360	700.000	361050.721	4618750.241	2997.650	708.621	708.621	44.178196	0.000	10.484	0.00	0.00	708.621		
CIRC. KV -20360	720.000	361063.564	4618765.573	2997.650	708.821	708.821	44.602942	0.000	9.502	0.00	0.00	708.821		
CIRC. KV -20360	725.190	361066.913	4618769.537	2997.650	708.870	708.870	44.713158	0.000	9.247	0.00	0.00	708.870		

ALTERNATIVA 2

PUNTOS SINGULARES EN PLANTA ANCHO 1.668 mm

Istram 20.08.08.26 04/02/21 10:03:07 200009 pagina 1
PROYECTO : ESTUDIO INFORMATIVO DE LA INTEGRACION DEL FFCC EN VALLADOLID
GRUPO : 2 : EJES ANCHO 1668 ALTERNATIVA 2
EJE : 100 : MANGO SUR IBERICO

* * * LISTADO DE LAS ALINEACIONES * * *

DATO	TIPO	LONGITUD	P.K.	X TANGENCIA	Y TANGENCIA	RADIO	PARAMETRO	AZIMUT	Cos/Xc/Xinf	Sen/Yc/Yinf
1	CIRC.	46.285	0.000	355844.102	4611310.640	445.000		69.7561	356047.646	4610914.919
	CLOT.	15.000	46.285	355886.288	4611329.634		246.337	76.3777	356017.614	4611365.824
2	CIRC.	41.824	61.285	355900.353	4611334.845	500.000		78.4056	356066.721	4610863.335
3	RECTA	35.064	103.109	355940.329	4611347.096			83.7307	0.9675226	0.2527844
			138.173	355974.254	4611355.960			83.7307		

Istram 20.08.08.26 04/02/21 10:04:05 200009 pagina 1
PROYECTO : ESTUDIO INFORMATIVO DE LA INTEGRACION DEL FFCC EN VALLADOLID
GRUPO : 2 : EJES ANCHO 1668 ALTERNATIVA 2
EJE : 36 : VIA 1E IBERICO

* * * LISTADO DE LAS ALINEACIONES * * *

DATO	TIPO	LONGITUD	P.K.	X TANGENCIA	Y TANGENCIA	RADIO	PARAMETRO	AZIMUT	Cos/Xc/Xinf	Sen/Yc/Yinf
1	RECTA	107.256	0.000	356408.094	4611523.530			73.7950	0.9164709	0.4001013
2	CIRC.	65.579	107.256	356506.392	4611566.443	-300.000		73.7950	356386.361	4611841.384
3	RECTA	40.279	172.835	356563.159	4611599.016			59.8787	0.8078954	0.5893258
			213.115	356595.701	4611622.753			59.8787		

Istram 20.08.08.26 04/02/21 10:03:41 200009 pagina 1
PROYECTO : ESTUDIO INFORMATIVO DE LA INTEGRACION DEL FFCC EN VALLADOLID
GRUPO : 2 : EJES ANCHO 1668 ALTERNATIVA 2
EJE : 17 : VIA 2E IBERICO

* * * LISTADO DE LAS ALINEACIONES * * *

DATO	TIPO	LONGITUD	P.K.	X TANGENCIA	Y TANGENCIA	RADIO	PARAMETRO	AZIMUT	Cos/Xc/Xinf	Sen/Yc/Yinf
1	RECTA	22.382	0.000	356019.787	4611369.792			89.4449	0.9862868	0.1650403
2	CIRC.	73.749	22.382	356041.862	4611373.486	-300.000		89.4449	355992.350	4611669.372
3	RECTA	97.666	96.130	356112.380	4611394.430			73.7950	0.9164709	0.4001013
			193.797	356201.888	4611433.507			73.7950		

Istram 20.08.08.26 04/02/21 10:02:41 200009 pagina 1
PROYECTO : ESTUDIO INFORMATIVO DE LA INTEGRACION DEL FFCC EN VALLADOLID
GRUPO : 2 : EJES ANCHO 1668 ALTERNATIVA 2
EJE : 69 : VIA 8 IBERICO

* * * LISTADO DE LAS ALINEACIONES * * *

DATO	TIPO	LONGITUD	P.K.	X TANGENCIA	Y TANGENCIA	RADIO	PARAMETRO	AZIMUT	Cos/Xc/Xinf	Sen/Yc/Yinf
1	CIRC.	63.314	0.000	355882.943	4611323.831	500.000		75.6693	356069.417	4610859.905
2	RECTA	38.912	63.314	355943.025	4611343.666			83.7307	0.9675226	0.2527847
3	CIRC.	35.903	102.226	355980.674	4611353.503	400.000		83.7307	356081.787	4610966.494
4	RECTA	28.780	138.129	356015.771	4611361.009			89.4449	0.9862868	0.1650405
5	CIRC.	73.748	166.910	356044.157	4611365.758	-300.000		89.4449	355994.645	4611661.644
6	RECTA	431.789	240.658	356114.675	4611386.703			73.7950	0.9164709	0.4001013
7	CIRC.	65.579	672.447	356510.397	4611559.463	-300.000		73.7950	356390.367	4611834.404
8	RECTA	51.282	738.026	356567.165	4611592.035			59.8787	0.8078955	0.5893258
			789.308	356608.595	4611622.257			59.8787		

Istram 20.08.08.26 04/02/21 10:02:13 200009 pagina 1
PROYECTO : ESTUDIO INFORMATIVO DE LA INTEGRACION DEL FFCC EN VALLADOLID
GRUPO : 2 : EJES ANCHO 1668 ALTERNATIVA 2
EJE : 71 : VIA 7 IBERICO

* * * LISTADO DE LAS ALINEACIONES * * *

DATO	TIPO	LONGITUD	P.K.	X TANGENCIA	Y TANGENCIA	RADIO	PARAMETRO	AZIMUT	Cos/Xc/Xinf	Sen/Yc/Yinf
1	RECTA	67.321	0.000	355976.612	4611358.511			89.4449	0.9862868	0.1650403
2	CIRC.	73.749	67.321	356043.009	4611369.622	-300.000		89.4449	355993.497	4611665.508
3	RECTA	430.856	141.069	356113.528	4611390.567			73.7950	0.9164709	0.4001015
4	CIRC.	65.579	571.925	356508.395	4611562.953	-300.000		73.7950	356388.364	4611837.894
5	RECTA	85.163	637.504	356565.162	4611595.526			59.8787	0.8078954	0.5893258
			722.667	356633.964	4611645.714			59.8787		

Istram 20.08.08.26 04/02/21 10:00:40 200009 pagina 1
PROYECTO : ESTUDIO INFORMATIVO DE LA INTEGRACION DEL FFCC EN VALLADOLID
GRUPO : 2 : EJES ANCHO 1668 ALTERNATIVA 2
EJE : 77 : VIA 1 - VIA 6 IBERICO

* * * LISTADO DE LAS ALINEACIONES * * *

DATO	TIPO	LONGITUD	P.K.	X TANGENCIA	Y TANGENCIA	RADIO	PARAMETRO	AZIMUT	Cos/Xc/Xinf	Sen/Yc/Yinf
1	RECTA	61.163	244217.757	354447.172	4607541.789			20.4062	0.3150785	0.9490656
2	CIRC.	80.954	244278.920	354466.443	4607599.836	649996.133		20.4062	971355.432	4402800.059
3	RECTA	523.588	244359.874	354491.955	4607676.665			20.4141	0.3151967	0.9490264
4	CIRC.	83.787	244883.462	354656.988	4608173.564	-330003.867		20.4141	41474.613	4712189.679
5	CIRC.	143.616	244967.248	354683.387	4608253.083	499996.133		20.3979	829232.905	4450776.456
6	RECTA	295.233	245110.864	354728.639	4608389.383			20.4162	0.3152283	0.9490159
7	CIRC.	158.496	245406.096	354821.705	4608669.563	-500003.867		20.4162	-119689.901	4766284.928
8	RECTA	376.239	245564.592	354871.644	4608819.986			20.3960	0.3149274	0.9491157
9	CIRC.	89.800	245940.832	354990.132	4609177.081	-150003.867		20.3960	212619.099	4656417.416
10	CIRC.	95.034	246030.631	355018.387	4609262.320	149996.133		20.3579	497410.332	4562109.655
11	RECTA	616.388	246125.666	355048.290	4609352.527			20.3983	0.3149606	0.9491047
12	CIRC.	78.688	246742.053	355242.428	4609937.543	-300003.867		20.3983	70507.333	4704426.940
13	CIRC.	55.397	246820.741	355267.202	4610012.230	369996.133		20.3816	706462.842	4493570.138
14	RECTA	426.061	246876.139	355284.640	4610064.811			20.3911	0.3148538	0.9491402
15	CIRC.	82.042	247302.200	355418.787	4610469.203	99996.133		20.3911	450329.136	4578985.044
16	CIRC.	84.718	247384.242	355444.650	4610547.062	-100003.867		20.4433	260552.825	4642111.520
17	RECTA	83.342	247468.960	355471.356	4610627.460			20.3894	0.3148284	0.9491486
18	CIRC.	53.537	247552.302	355497.594	4610706.564	-40003.867		20.3894	317527.980	4623300.919
19	CIRC.	61.861	247605.839	355514.415	4610757.390	39996.133		20.3042	393493.506	4598216.287
20	RECTA	162.921	247667.700	355533.858	4610816.117			20.4027	0.3150262	0.9490830
	CLOT.	147.912	247830.622	355585.182	4610970.742		267.285	20.4027	355585.182	4610970.742
21	CIRC.	214.740	247978.534	355638.822	4611108.420	483.000		30.1505	356068.659	4610888.126
	CLOT.	10.000	248193.273	355775.356	4611271.874		237.827	58.4543	355688.416	4611193.533
22	CIRC.	107.774	248203.273	355783.365	4611277.861	445.000		59.8286	356045.897	4610918.554
	CLOT.	25.000	248311.047	355877.198	4611330.338		318.019	75.2468	356098.423	4611379.467
23	CIRC.	40.088	248336.047	355900.577	4611339.185	500.000		78.6266	356065.308	4610867.100
24	RECTA	89.785	248376.135	355938.916	4611350.861			83.7307	0.9675226	0.2527844
25	CIRC.	78.035	248465.919	356025.784	4611373.557	-500.000		83.7307	355899.392	4611857.319
26	RECTA	439.374	248543.954	356099.443	4611399.083			73.7950	0.9164710	0.4001011
27	CIRC.	77.303	248983.328	356502.116	4611574.877	-600.000		73.7950	356262.055	4612124.760
28	RECTA	114.728	249060.631	356570.777	4611610.278			65.5929	0.8574690	0.5145356
29	CIRC.	47.092	249175.360	356669.153	4611669.310	350.000		65.5929	356849.240	4611369.196
30	RECTA	182.348	249222.452	356711.039	4611690.755			74.1586	0.9187409	0.3948610
	CLOT.	247.157	249404.800	356878.569	4611762.757		487.058	74.1586	356878.569	4611762.757
31	CIRC.	454.115	249651.957	357101.083	4611869.922	-959.816		65.9619	356612.003	4612695.784
	CLOT.	130.346	250106.072	357423.679	4612183.506		353.707	35.8417	357488.175	4612296.746
32	RECTA	217.253	250236.419	357488.175	4612296.746			31.5189	0.4751181	0.8799220
	CLOT.	10.000	250453.672	357591.396	4612487.912		921.954	31.5189	357591.396	4612487.912
33	CIRC.	67.536	250463.672	357596.147	4612496.711	85000.000		31.5227	432387.145	4572107.273

Istram 20.08.08.26 04/02/21 10:00:40 200009 pagina 2
PROYECTO : ESTUDIO INFORMATIVO DE LA INTEGRACION DEL FFCC EN VALLADOLID
GRUPO : 2 : EJES ANCHO 1668 ALTERNATIVA 2
EJE : 77 : VIA 1 - VIA 6 IBERICO

* * * LISTADO DE LAS ALINEACIONES * * *

DATO	TIPO	LONGITUD	P.K.	X TANGENCIA	Y TANGENCIA	RADIO	PARAMETRO	AZIMUT	Cos/Xc/Xinf	Sen/Yc/Yinf
	CLOT.	10.000	250531.208	357628.262	4612556.123		921.954	31.5733	357633.021	4612564.918
34	RECTA	1212.331	250541.208	357633.021	4612564.918			31.5770	0.4759206	0.8794883
	CLOT.	30.000	251753.539	358209.994	4613631.149		2449.490	31.5770	358209.994	4613631.149
35	CIRC.	77.577	251783.539	358224.273	4613657.533	200000.000		31.5818	534114.787	4518460.228
	CLOT.	30.000	251861.116	358261.212	4613725.751		2449.490	31.6065	358275.503	4613752.129
	CLOT.	30.000	251891.116	358275.503	4613752.129		2449.490	31.6112	358275.503	4613752.129
36	CIRC.	80.710	251921.116	358289.794	4613778.506	-200000.000		31.6065	182436.218	4709044.029
	CLOT.	30.000	252001.826	358328.224	4613849.479		2449.490	31.5808	358342.502	4613875.864
37	RECTA	852.294	252031.826	358342.502	4613875.864			31.5760	0.4759068	0.8794957
	CLOT.	55.000	252884.120	358748.114	4614625.453		497.494	31.5760	358748.114	4614625.453
38	CIRC.	93.722	252939.120	358774.388	4614673.772	4500.000		31.9651	362718.957	4612508.045
	CLOT.	55.000	253032.843	358820.346	4614755.450		497.494	33.2910	358848.008	4614802.988
39	RECTA	153.443	253087.843	358848.008	4614802.988			33.6800	0.5047084	0.8632899
	CLOT.	55.000	253241.285	358925.452	4614935.453		497.494	33.6800	358925.452	4614935.453
40	CIRC.	92.825	253296.285	358953.114	4614982.991	-4500.000		33.2910	355054.503	4617230.396
	CLOT.	55.000	253389.111	358998.640	4615063.883		497.494	31.9777	359024.923	4615112.196
41	RECTA	182.529	253444.111	359024.923	4615112.196			31.5887	0.4760821	0.8794008
	CLOT.	32.500	253626.639	359111.822	4615272.712		487.083	31.5887	359111.822	4615272.712
42	CIRC.	92.339	253659.139	359127.274	4615301.304	-7300.000		31.4470	352699.927	4618762.405
	CLOT.	32.500	253751.479	359170.539	4615382.880		487.083	30.6417	359185.542	4615411.710
43	RECTA	145.188	253783.979	359185.542	4615411.710			30.5000	0.4609744	0.8874134
	CLOT.	32.500	253929.167	359252.469	4615540.552		487.083	30.5000	359252.469	4615540.552
44	CIRC.	91.553	253961.667	359267.472	4615569.381	7300.000		30.6417	365738.084	4612189.856
	CLOT.	32.500	254053.220	359310.365	4615650.265		487.083	31.4401	359325.813	4615678.859
45	RECTA	1436.777	254085.720	359325.813	4615678.859			31.5818	0.4759874	0.8794521
46	CIRC.	121.049	255522.497	360009.701	4616942.436	600000.000		31.5818	887680.948	4331349.971
47	RECTA	298.792	255643.546	360067.329	4617048.886			31.5947	0.4761649	0.8793560
	CLOT.	35.000	255942.338	360209.604	4617311.631		519.134	31.5947	360209.604	4617311.631
48	CIRC.	91.427	255977.338	360226.293	4617342.396	7700.000		31.7394	366988.984	4613660.547
	CLOT.	35.000	256068.766	360270.486	4617422.432		519.134	32.4953	360287.631	4617452.945
49	RECTA	130.959	256103.766	360287.631	4617452.945			32.6400	0.4905383	0.8714196
	CLOT.	35.000	256234.725	360351.872	4617567.065		512.348	32.6400	360351.872	4617567.065
50	CIRC.	89.732	256269.725	360369.017	4617597.578	-7500.000		32.4914	353824.803	4621261.356
	CLOT.	35.000	256359.457	360412.382	4617676.136		512.348	31.7297	360429.065	4617706.904
51	RECTA	366.857	256394.457	360429.065	4617706.904			31.5812	0.4759785	0.8794569
	CLOT.	15.000	256761.315	360603.682	4618029.539		504.975	31.5812	360603.682	4618029.539
52	CIRC.	105.169	256776.315	360610.819	4618042.732	-17000.000		31.5531	345656.484	4626127.771
	CLOT.	15.000	256881.484	360660.550	4618135.400		504.975	31.1593	360667.599	4618148.641
	CLOT.	40.000	256896.484	360667.599	4618148.641		489.898	31.1312	360667.599	4618148.641

Istram 20.08.08.26 04/02/21 10:00:40 200009 pagina 3
PROYECTO : ESTUDIO INFORMATIVO DE LA INTEGRACION DEL FFCC EN VALLADOLID
GRUPO : 2 : EJES ANCHO 1668 ALTERNATIVA 2
EJE : 77 : VIA 1 - VIA 6 IBERICO

* * * LISTADO DE LAS ALINEACIONES * * *

DATO	TIPO	LONGITUD	P.K.	X TANGENCIA	Y TANGENCIA	RADIO	PARAMETRO	AZIMUT	Cos/Xc/Xinf	Sen/Yc/Yinf
53	CIRC.	97.499	256936.484	360686.428	4618183.932	6000.000		31.3434	365973.800	4615347.792
	CLOT.	40.000	257033.983	360733.211	4618269.473		178.040	32.3779	360730.640	4618264.858
54	CIRC.	18.079	257073.983	360753.097	4618304.178	700.000		34.4090	361353.314	4617943.985
			257092.062	360762.599	4618319.558			36.0532		

Istram 20.08.08.26 04/02/21 10:04:26 200009 pagina 1
PROYECTO : ESTUDIO INFORMATIVO DE LA INTEGRACION DEL FFCC EN VALLADOLID
GRUPO : 2 : EJES ANCHO 1668 ALTERNATIVA 2
EJE : 78 : VIA 8 TRES HERMANOS

* * * LISTADO DE LAS ALINEACIONES * * *

DATO	TIPO	LONGITUD	P.K.	X TANGENCIA	Y TANGENCIA	RADIO	PARAMETRO	AZIMUT	Cos/Xc/Xinf	Sen/Yc/Yinf
1	RECTA	13.468	0.000	358916.516	4614916.206			36.3522	0.5404901	0.8413504
	CLOT.	45.000	13.468	358923.796	4614927.538		264.102	36.3522	358923.796	4614927.538
2	CIRC.	70.979	58.468	358947.934	4614965.515	-1550.000		35.4281	357631.818	4615784.257
	CLOT.	45.000	129.447	358984.034	4615026.622		264.102	32.5128	359005.649	4615066.090
3	RECTA	260.129	174.447	359005.649	4615066.090			31.5887	0.4760822	0.8794008
	CLOT.	37.500	434.576	359129.491	4615294.847		243.028	31.5887	359129.491	4615294.847
4	CIRC.	55.546	472.076	359147.213	4615327.895	-1575.000		30.8308	357753.329	4616061.183
	CLOT.	37.500	527.622	359172.202	4615377.499		243.028	28.5856	359188.211	4615411.410
5	RECTA	12.094	565.122	359188.211	4615411.410			27.8278	0.4233298	0.9059757
			577.216	359193.331	4615422.367			27.8278		

Istram 20.08.08.26 04/02/21 10:04:48 200009 pagina 1
PROYECTO : ESTUDIO INFORMATIVO DE LA INTEGRACION DEL FFCC EN VALLADOLID
GRUPO : 2 : EJES ANCHO 1668 ALTERNATIVA 2
EJE : 83 : VIA 10 TRES HERMANOS

==========
* * * LISTADO DE LAS ALINEACIONES * * *
==========

DATO	TIPO	LONGITUD	P.K.	X TANGENCIA	Y TANGENCIA	RADIO	PARAMETRO	AZIMUT	Cos/Xc/Xinf	Sen/Yc/Yinf
1	RECTA	70.312	0.000	358873.562	4614842.619			38.1924	0.5645808	0.8253778
	CLOT.	20.000	70.312	358913.259	4614900.653		154.919	38.1924	358913.259	4614900.653
2	CIRC.	104.477	90.312	358924.505	4614917.192	-1200.000		37.6619	357928.440	4615586.412
	CLOT.	20.000	194.789	358978.924	4615006.339		154.919	32.1192	358988.494	4615023.901
3	RECTA	345.954	214.789	358988.494	4615023.901			31.5887	0.4760820	0.8794009
	CLOT.	20.000	560.743	359153.197	4615328.133		154.919	31.5887	359153.197	4615328.133
4	CIRC.	85.579	580.743	359162.669	4615345.747	-1200.000		31.0582	358102.664	4615908.232
	CLOT.	20.000	666.322	359200.055	4615422.708		154.919	26.5181	359208.045	4615441.042
5	RECTA	61.989	686.322	359208.045	4615441.042			25.9876	0.3969687	0.9178321
			748.311	359232.653	4615497.938			25.9876		

PUNTOS SINGULARES EN PLANTA ANCHO 1.435 mm

Istram 20.08.08.26 11/02/21 08:35:00 200009 pagina 1
PROYECTO : ESTUDIO INFORMATIVO DE LA INTEGRACION DEL FFCC EN VALLADOLID
GRUPO : 1 : EJES ANCHO 1435 ALTERNATIVA 2
EJE : 2 : VIA 2 UIC

* * * LISTADO DE LAS ALINEACIONES * * *

DATO	TIPO	LONGITUD	P.K.	X TANGENCIA	Y TANGENCIA	RADIO	PARAMETRO	AZIMUT	Cos/Xc/Xinf	Sen/Yc/Yinf
1	RECTA	1985.294	174876.679	354437.426	4607545.024			20.4056	0.3150706	0.9490682
	CLOT.	40.000	176861.973	355062.933	4609429.204		774.597	20.4056	355062.933	4609429.204
2	CIRC.	88.323	176901.973	355075.519	4609467.172	-15000.000		20.3208	340833.207	4614174.245
	CLOT.	40.000	176990.296	355102.988	4609551.115		774.597	19.9459	355115.283	4609589.178
	CLOT.	40.000	177030.296	355115.283	4609589.178		774.597	19.8610	355115.283	4609589.178
3	CIRC.	84.199	177070.296	355127.577	4609627.242	15000.000		19.9459	369397.359	4605004.111
	CLOT.	40.000	177154.495	355153.753	4609707.269		774.597	20.3033	355166.328	4609745.240
4	RECTA	396.954	177194.495	355166.328	4609745.240			20.3881	0.3148096	0.9491548
	CLOT.	40.000	177591.449	355291.293	4610122.011		632.456	20.3881	355291.293	4610122.011
5	CIRC.	87.605	177631.449	355303.911	4610159.969	10000.000		20.5155	364789.144	4606992.896
	CLOT.	40.000	177719.054	355332.020	4610242.942		632.456	21.0732	355345.070	4610280.753
	CLOT.	37.355	177759.054	355345.070	4610280.753		333.128	21.2005	355345.070	4610280.753
6	CIRC.	0.000	177796.409	355357.208	4610316.082	-2970.800		20.8003	352543.572	4611269.552
	CLOT.	37.355	177796.409	355357.208	4610316.082		333.128	20.8003	355369.048	4610351.510
7	RECTA	641.777	177833.764	355369.048	4610351.510			20.4000	0.3149866	0.9490961
	CLOT.	179.436	178475.541	355571.199	4610960.618		294.393	20.4000	355571.199	4610960.618
8	CIRC.	295.968	178654.977	355638.043	4611126.842	483.000		32.2253	356060.473	4610892.659
	CLOT.	38.835	178950.945	355849.589	4611327.189		136.958	71.2355	355884.966	4611343.202
9	RECTA	1120.035	178989.780	355884.966	4611343.202			73.7949	0.9164702	0.4001030
	CLOT.	10.000	180109.815	356911.445	4611791.331		360.555	73.7949	356911.445	4611791.331
10	CIRC.	53.129	180119.815	356920.610	4611795.331	13000.000		73.8194	362117.366	4599879.219
	CLOT.	10.000	180172.944	356969.352	4611816.470		360.555	74.0795	356978.536	4611820.427
	CLOT.	20.000	180182.944	356978.536	4611820.427		133.679	74.1040	356978.536	4611820.427
11	CIRC.	62.406	180202.944	356996.874	4611828.409	-893.500		73.3915	356634.201	4612644.993
	CLOT.	20.000	180265.350	357052.977	4611855.710		441.904	68.9451	357236.933	4611973.451
12	CIRC.	128.369	180285.350	357070.541	4611865.274	-983.500		67.5853	356591.132	4612724.017
	CLOT.	50.000	180413.719	357178.231	4611934.975		1373.088	59.2760	355341.087	4611958.312
13	CIRC.	203.083	180463.719	357217.562	4611965.838	-958.500		55.9973	356606.559	4612704.348
	CLOT.	60.000	180666.802	357359.203	4612110.843		3328.990	42.5088	360708.966	4612078.188
14	CIRC.	55.886	180726.802	357394.860	4612159.086	-963.500		38.5340	356602.539	4612707.319
	CLOT.	100.000	180782.688	357425.309	4612205.939		310.403	34.8415	357474.355	4612293.071
15	RECTA	71.376	180882.688	357474.355	4612293.071			31.5378	0.4753789	0.8797812
	CLOT.	10.000	180954.064	357508.286	4612355.867		612.372	31.5378	357508.286	4612355.867
16	CIRC.	54.248	180964.064	357513.040	4612364.665	37500.000		31.5463	390502.457	4594533.558
	CLOT.	10.000	181018.312	357538.870	4612412.369		612.372	31.6384	357543.638	4612421.159
17	RECTA	54.962	181028.312	357543.638	4612421.159			31.6469	0.4768855	0.8789654
	CLOT.	27.500	181083.274	357569.848	4612469.468		262.202	31.6469	357569.848	4612469.468
18	CIRC.	33.868	181110.774	357583.007	4612493.616	2500.000		31.9970	359773.830	4611289.334
	CLOT.	27.500	181144.641	357599.522	4612523.184		262.202	32.8594	357613.182	4612547.051

Istram 20.08.08.26 11/02/21 08:35:00 200009 pagina 2
PROYECTO : ESTUDIO INFORMATIVO DE LA INTEGRACION DEL FFCC EN VALLADOLID
GRUPO : 1 : EJES ANCHO 1435 ALTERNATIVA 2
EJE : 2 : VIA 2 UIC

* * * LISTADO DE LAS ALINEACIONES * * *

DATO	TIPO	LONGITUD	P.K.	X TANGENCIA	Y TANGENCIA	RADIO	PARAMETRO	AZIMUT	Cos/Xc/Xinf	Sen/Yc/Yinf
	CLOT.	27.500	181172.141	357613.182	4612547.051		256.905	33.2096	357613.182	4612547.051
19	CIRC.	41.696	181199.641	357626.840	4612570.920	-2400.000		32.8449	355539.233	4613754.936
	CLOT.	27.500	181241.338	357647.095	4612607.365		256.905	31.7388	357660.151	4612631.568
20	RECTA	45.674	181268.838	357660.151	4612631.568			31.3741	0.4731150	0.8810007
	CLOT.	25.000	181314.512	357681.760	4612671.807		344.601	31.3741	357681.760	4612671.807
21	CIRC.	49.828	181339.512	357693.569	4612693.842	-4750.000		31.2066	353502.916	4614930.118
	CLOT.	25.000	181389.340	357716.797	4612737.925		344.601	30.5387	357728.296	4612760.124
	CLOT.	20.000	181414.340	357728.296	4612760.124		346.410	30.3712	357728.296	4612760.124
22	CIRC.	77.257	181434.340	357737.489	4612777.885	6000.000		30.4773	363062.955	4610013.937
	CLOT.	50.000	181511.597	357773.519	4612846.226		548.900	31.2970	357797.346	4612890.428
23	CIRC.	566.276	181561.597	357797.244	4612890.239	1400000.000		31.5634	1589222.914	3946864.099
	CLOT.	50.000	182127.873	358066.741	4613388.275		8366.600	31.5892	358090.546	4613432.244
24	RECTA	321.959	182177.873	358090.546	4613432.244			31.5903	0.4761044	0.8793888
	CLOT.	25.000	182499.833	358243.832	4613715.372		1936.492	31.5903	358243.832	4613715.372
25	CIRC.	122.164	182524.833	358255.734	4613737.357	-150000.000		31.5850	226341.468	4685142.024
	CLOT.	25.000	182646.997	358313.844	4613844.815		1936.492	31.5332	358325.726	4613866.811
	CLOT.	25.000	182671.997	358325.726	4613866.811		1968.502	31.5279	358325.726	4613866.811
26	CIRC.	92.241	182696.997	358337.608	4613888.807	155000.000		31.5330	494709.261	4540215.391
	CLOT.	25.000	182789.238	358381.475	4613969.950		1968.502	31.5709	358393.372	4613991.937
27	RECTA	588.055	182814.238	358393.372	4613991.937			31.5760	0.4759068	0.8794957
	CLOT.	40.000	183402.293	358673.231	4614509.129		6324.555	31.5760	358673.231	4614509.129
28	CIRC.	159.407	183442.293	358692.268	4614544.309	1000000.000		31.5773	1238178.474	4138619.930
	CLOT.	40.000	183601.700	358768.145	4614684.499		6324.555	31.5874	358787.188	4614719.675
29	RECTA	167.588	183641.700	358787.188	4614719.675			31.5887	0.4760822	0.8794008
	CLOT.	70.000	183809.288	358866.973	4614867.052		935.414	31.5887	358866.973	4614867.052
30	CIRC.	182.190	183879.288	358900.357	4614928.579	12500.000		31.7670	369876.161	4608946.797
	CLOT.	70.000	184061.478	358988.705	4615087.913		935.414	32.6948	359023.209	4615148.818
	CLOT.	70.000	184131.478	359023.209	4615148.818		935.414	32.8731	359023.209	4615148.818
31	CIRC.	182.190	184201.478	359057.713	4615209.724	-12500.000		32.6948	348170.258	4621350.840
	CLOT.	70.000	184383.668	359146.062	4615369.058		935.414	31.7670	359179.445	4615430.584
32	RECTA	353.962	184453.668	359179.445	4615430.584			31.5887	0.4760822	0.8794008
	CLOT.	30.000	184807.630	359347.960	4615741.859		6708.204	31.5887	359347.960	4615741.859
33	CIRC.	131.525	184837.630	359362.242	4615768.241	-1500000.000		31.5881	-959746.110	5329878.285
	CLOT.	30.000	184969.155	359424.852	4615883.907		6708.204	31.5825	359439.132	4615910.291
34	RECTA	1178.442	184999.155	359439.132	4615910.291			31.5818	0.4759875	0.8794521
35	CIRC.	120.121	186177.597	360000.056	4616946.674	600000.000		31.5818	887671.297	4331354.200
36	RECTA	1255.103	186297.719	360057.243	4617052.310			31.5946	0.4761635	0.8793568
	CLOT.	205.000	187552.821	360654.877	4618155.993		803.586	31.5946	360654.877	4618155.993
37	CIRC.	0.000	187757.821	360754.435	4618335.183	3150.000		33.6661	363474.145	4616745.944

Istram 20.08.08.26 11/02/21 08:35:00 *200009* pagina 3
PROYECTO : ESTUDIO INFORMATIVO DE LA INTEGRACION DEL FFCC EN VALLADOLID
GRUPO : 1 : EJES ANCHO 1435 ALTERNATIVA 2
EJE : 2 : VIA 2 UIC

* * * LISTADO DE LAS ALINEACIONES * * *

DATO	TIPO	LONGITUD	P.K.	X TANGENCIA	Y TANGENCIA	RADIO	PARAMETRO	AZIMUT	Cos/Xc/Xinf	Sen/Yc/Yinf
38	CIRC.	0.000	187757.821	360754.435	4618335.183	3150.000		33.6661	363474.145	4616745.944
			187757.821	360754.435	4618335.183			33.6661		

Istram 20.08.08.26 11/02/21 08:36:27 *200009* pagina 1
PROYECTO : ESTUDIO INFORMATIVO DE LA INTEGRACION DEL FFCC EN VALLADOLID
GRUPO : 1 : EJES ANCHO 1435 ALTERNATIVA 2
EJE : 35 : VIA 4 UIC

* * * LISTADO DE LAS ALINEACIONES * * *

DATO	TIPO	LONGITUD	P.K.	X TANGENCIA	Y TANGENCIA	RADIO	PARAMETRO	AZIMUT	Cos/Xc/Xinf	Sen/Yc/Yinf
1	RECTA	80.615	0.000	355923.398	4611353.449			80.7698	0.9547233	0.2974952
2	CIRC.	82.137	80.615	356000.362	4611377.431	-750.000		80.7698	355777.241	4612093.474
3	RECTA	443.198	162.752	356077.287	4611406.108			73.7977	0.9164881	0.4000619
4	CIRC.	23.945	605.949	356483.473	4611583.414	-1000.000		73.7977	356083.411	4612499.902
5	RECTA	46.573	629.895	356505.301	4611593.256			72.2733	0.9066467	0.4218906
6	CIRC.	85.657	676.468	356547.527	4611612.904	-1000.000		72.2733	356125.636	4612519.551
7	RECTA	24.255	762.125	356623.546	4611652.322			66.8202	0.8672288	0.4979099
8	CIRC.	28.485	786.380	356644.581	4611664.399	260.000		66.8202	356774.037	4611438.920
9	RECTA	64.504	814.865	356670.011	4611677.202			73.7949	0.9164707	0.4001019
10	CIRC.	31.772	879.370	356729.127	4611703.010	-290.000		73.7949	356613.097	4611968.787
11	RECTA	2.487	911.142	356757.491	4611717.290			66.8202	0.8672287	0.4979099
			913.629	356759.648	4611718.529			66.8202		

Istram 20.08.08.26 11/02/21 08:37:01 *200009* pagina 1
PROYECTO : ESTUDIO INFORMATIVO DE LA INTEGRACION DEL FFCC EN VALLADOLID
GRUPO : 1 : EJES ANCHO 1435 ALTERNATIVA 2
EJE : 38 : VIA 5 UIC

* * * LISTADO DE LAS ALINEACIONES * * *

DATO	TIPO	LONGITUD	P.K.	X TANGENCIA	Y TANGENCIA	RADIO	PARAMETRO	AZIMUT	Cos/Xc/Xinf	Sen/Yc/Yinf
1	RECTA	25.103	0.000	355969.625	4611365.773			87.7445	0.9815274	0.1913216
2	CIRC.	109.559	25.103	355994.265	4611370.576	-500.000		87.7445	355898.604	4611861.339
3	RECTA	438.426	134.663	356098.654	4611403.104			73.7950	0.9164710	0.4001011
4	CIRC.	78.506	573.089	356500.459	4611578.518	-600.000		73.7950	356260.398	4612128.401
5	RECTA	96.966	651.594	356570.150	4611614.539			65.4653	0.8564362	0.5162528
6	CIRC.	18.090	748.560	356653.195	4611664.598	850.000		65.4653	357092.010	4610936.627
7	RECTA	6.103	766.650	356668.786	4611673.772			66.8202	0.8672285	0.4979104
			772.753	356674.079	4611676.810			66.8202		

Istram 20.08.08.26 11/02/21 08:35:56 *200009* pagina 1
PROYECTO : ESTUDIO INFORMATIVO DE LA INTEGRACION DEL FFCC EN VALLADOLID
GRUPO : 1 : EJES ANCHO 1435 ALTERNATIVA 2
EJE : 39 : VIA 3 UIC

* * * LISTADO DE LAS ALINEACIONES * * *

DATO	TIPO	LONGITUD	P.K.	X TANGENCIA	Y TANGENCIA	RADIO	PARAMETRO	AZIMUT	Cos/Xc/Xinf	Sen/Yc/Yinf
1	RECTA	80.628	0.000	355921.798	4611357.114			80.7696	0.9547228	0.2974968
3	CIRC.	82.167	80.628	355998.775	4611381.100	-750.000		80.7696	355775.653	4612097.142
4	RECTA	443.823	162.796	356075.728	4611409.789			73.7951	0.9164713	0.4001004
5	CIRC.	23.903	606.618	356482.479	4611587.362	-1000.000		73.7951	356082.378	4612503.834
6	RECTA	45.679	630.522	356504.269	4611597.187			72.2733	0.9066468	0.4218906
7	CIRC.	85.658	676.201	356545.684	4611616.459	-1000.000		72.2733	356123.793	4612523.105
8	RECTA	20.366	761.858	356621.703	4611655.877			66.8202	0.8672287	0.4979099
			782.224	356639.365	4611666.017			66.8202		

Istram 20.08.08.26 11/02/21 08:38:09 200009 pagina 1
PROYECTO : ESTUDIO INFORMATIVO DE LA INTEGRACION DEL FFCC EN VALLADOLID
GRUPO : 1 : EJES ANCHO 1435 ALTERNATIVA 2
EJE : 62 : VIA M2 UIC ESTACION VALLADOLID

* * * LISTADO DE LAS ALINEACIONES * * *

DATO	TIPO	LONGITUD	P.K.	X TANGENCIA	Y TANGENCIA	RADIO	PARAMETRO	AZIMUT	Cos/Xc/Xinf	Sen/Yc/Yinf
1	RECTA	26.767	0.000	356496.943	4611620.286			273.7949	-0.9164702	-0.4001030
2	CIRC.	34.448	26.767	356472.412	4611609.577	25000.000		273.7949	346469.838	4634521.331
3	RECTA	211.479	61.215	356440.832	4611595.816			273.8826	-0.9170206	-0.3988398
			272.694	356246.901	4611511.469			273.8826		

Istram 20.08.08.26 11/02/21 08:37:25 200009 pagina 1
PROYECTO : ESTUDIO INFORMATIVO DE LA INTEGRACION DEL FFCC EN VALLADOLID
GRUPO : 1 : EJES ANCHO 1435 ALTERNATIVA 2
EJE : 63 : VIA M1 UIC ESTACION VALLADOLID

* * * LISTADO DE LAS ALINEACIONES * * *

DATO	TIPO	LONGITUD	P.K.	X TANGENCIA	Y TANGENCIA	RADIO	PARAMETRO	AZIMUT	Cos/Xc/Xinf	Sen/Yc/Yinf
1	RECTA	84.994	0.000	356577.242	4611647.542			280.7696	-0.9547228	-0.2974968
2	CIRC.	34.022	84.994	356496.096	4611622.257	-315.000		280.7696	356589.808	4611321.519
3	RECTA	238.746	119.016	356464.224	4611610.403			273.8937	-0.9170904	-0.3986793
			357.761	356245.272	4611515.220			273.8937		

Istram 20.08.08.26 11/02/21 08:29:16 200009 pagina 1
PROYECTO : ESTUDIO INFORMATIVO DE LA INTEGRACION DEL FFCC EN VALLADOLID
GRUPO : 1 : EJES ANCHO 1435 ALTERNATIVA 2
EJE : 74 : VIA 1 UIC

* * * LISTADO DE LAS ALINEACIONES * * *

DATO	TIPO	LONGITUD	P.K.	X TANGENCIA	Y TANGENCIA	RADIO	PARAMETRO	AZIMUT	Cos/Xc/Xinf	Sen/Yc/Yinf
1	RECTA	61.163	174874.848	354443.502	4607543.007			20.4062	0.3150785	0.9490656
2	CIRC.	80.954	174936.011	354462.773	4607601.055	650000.000		20.4062	971355.432	4402800.059
3	RECTA	523.588	175016.965	354488.285	4607677.884			20.4141	0.3151967	0.9490264
4	CIRC.	83.786	175540.553	354653.318	4608174.783	-330000.000		20.4141	41474.613	4712189.679
5	CIRC.	143.617	175624.339	354679.717	4608254.301	500000.000		20.3979	829232.905	4450776.456
6	RECTA	295.233	175767.955	354724.969	4608390.602			20.4162	0.3152283	0.9490159
7	CIRC.	158.495	176063.188	354818.035	4608670.782	-500000.000		20.4162	-119689.901	4766284.928
8	RECTA	376.239	176221.683	354867.973	4608821.204			20.3960	0.3149274	0.9491157
9	CIRC.	89.798	176597.922	354986.461	4609178.299	-150000.000		20.3960	212619.099	4656417.416
10	CIRC.	95.037	176687.719	355014.716	4609263.535	150000.000		20.3579	497410.332	4562109.655
11	RECTA	616.388	176782.756	355044.620	4609353.745			20.3983	0.3149606	0.9491047
12	CIRC.	78.687	177399.144	355238.758	4609938.761	-300000.000		20.3983	70507.333	4704426.940
13	CIRC.	55.398	177477.831	355263.531	4610013.447	370000.000		20.3816	706462.842	4493570.138
14	RECTA	426.061	177533.229	355280.969	4610066.028			20.3911	0.3148538	0.9491402
15	CIRC.	82.046	177959.290	355415.116	4610470.420	100000.000		20.3911	450329.136	4578985.044
16	CIRC.	84.714	178041.335	355440.981	4610548.282	-100000.000		20.4433	260552.825	4642111.520
17	RECTA	83.342	178126.050	355467.685	4610628.677			20.3894	0.3148284	0.9491486
18	CIRC.	56.330	178209.392	355493.924	4610707.782	-40000.000		20.3894	317527.980	4623300.919
19	CIRC.	63.016	178265.722	355511.620	4610761.260	40000.000		20.2997	393495.261	4598221.600
20	RECTA	159.088	178328.738	355531.422	4610821.083			20.4000	0.3149871	0.9490960
	CLOT.	150.632	178487.826	355581.533	4610972.073		269.732	20.4000	355581.533	4610972.073
21	CIRC.	236.442	178638.458	355636.283	4611112.228	483.000		30.3271	356065.507	4610890.742
	CLOT.	10.000	178874.900	355790.838	4611288.041		237.827	61.4914	355700.261	4611213.935
22	CIRC.	26.534	178884.900	355799.123	4611293.639	445.000		62.8657	356044.223	4610922.221
	CLOT.	25.000	178911.433	355821.692	4611307.585		221.826	66.6616	355921.628	4611354.736
23	CIRC.	20.777	178936.433	355843.657	4611319.519	575.000		69.8338	356106.038	4610807.873
	CLOT.	30.000	178957.211	355862.312	4611328.664		131.339	72.1342	355889.700	4611340.905
24	RECTA	1070.874	178987.211	355889.700	4611340.905			73.7950	0.9164709	0.4001014
	CLOT.	20.000	180058.084	356871.124	4611769.363		189.737	73.7950	356871.124	4611769.363
25	CIRC.	48.864	180078.084	356889.469	4611777.331	1800.000		74.1487	357600.475	4610123.708
	CLOT.	20.000	180126.948	356934.615	4611796.021		189.737	75.8769	356953.224	4611803.351
	CLOT.	20.000	180146.948	356953.224	4611803.351		134.164	76.2305	356953.224	4611803.351
26	CIRC.	93.573	180166.948	356971.818	4611810.715	-900.000		75.5232	356634.248	4612645.009
	CLOT.	20.000	180260.521	357056.581	4611850.254		444.972	68.9042	357241.684	4611968.883
27	CIRC.	128.468	180280.521	357074.140	4611859.829	-990.000		67.5538	356591.135	4612724.008
	CLOT.	50.000	180408.989	357181.905	4611929.596		1382.281	59.2927	355332.338	4611953.785
28	CIRC.	119.360	180458.989	357221.250	4611960.442	-965.000		56.0358	356606.554	4612704.333
	CLOT.	60.000	180578.349	357308.330	4612041.962		3351.507	48.1615	360664.339	4611709.308
29	CIRC.	148.136	180638.349	357348.134	4612086.846	-970.000		44.2135	356602.813	4612707.649

Istram 20.08.08.26 11/02/21 08:29:16 200009 pagina 2
PROYECTO : ESTUDIO INFORMATIVO DE LA INTEGRACION DEL FFCC EN VALLADOLID
GRUPO : 1 : EJES ANCHO 1435 ALTERNATIVA 2
EJE : 74 : VIA 1 UIC

* * * LISTADO DE LAS ALINEACIONES * * *

DATO	TIPO	LONGITUD	P.K.	X TANGENCIA	Y TANGENCIA	RADIO	PARAMETRO	AZIMUT	Cos/Xc/Xinf	Sen/Yc/Yinf
	CLOT.	90.000	180786.484	357433.898	4612207.452		295.466	34.4912	357477.898	4612285.954
30	RECTA	126.935	180876.484	357477.898	4612285.954			31.5378	0.4753789	0.8797812
	CLOT.	10.000	181003.419	357538.240	4612397.629		974.679	31.5378	357538.240	4612397.629
31	CIRC.	42.241	181013.419	357542.994	4612406.426	95000.000		31.5412	441119.828	4567241.033
	CLOT.	10.000	181055.660	357563.084	4612443.584		974.679	31.5695	357567.843	4612452.379
32	RECTA	85.182	181065.660	357567.843	4612452.379			31.5728	0.4758626	0.8795196
	CLOT.	20.000	181150.843	357608.378	4612527.299		1886.796	31.5728	357608.378	4612527.299
33	CIRC.	39.281	181170.843	357617.895	4612544.889	-178000.000		31.5692	201058.644	4697239.640
	CLOT.	20.000	181210.124	357636.581	4612579.441		1886.796	31.5552	357646.093	4612597.034
34	RECTA	44.043	181230.124	357646.093	4612597.034			31.5516	0.4755697	0.8796781
	CLOT.	50.000	181274.167	357667.039	4612635.778		8366.600	31.5516	357667.039	4612635.778
35	CIRC.	801.143	181324.167	357690.817	4612679.762	1400000.000		31.5527	1589228.205	3946860.220
	CLOT.	50.000	182125.309	358072.031	4613384.393		8366.600	31.5892	358095.836	4613428.363
36	RECTA	322.857	182175.309	358095.836	4613428.363			31.5903	0.4761044	0.8793888
	CLOT.	25.000	182498.166	358249.549	4613712.280		1936.492	31.5903	358249.549	4613712.280
37	CIRC.	122.164	182523.166	358261.451	4613734.265	-150000.000		31.5850	226347.186	4685138.932
	CLOT.	25.000	182645.330	358319.561	4613841.723		1936.492	31.5332	358331.443	4613863.719
	CLOT.	25.000	182670.330	358331.443	4613863.719		1968.502	31.5279	358331.443	4613863.719
38	CIRC.	92.241	182695.330	358343.325	4613885.715	155000.000		31.5330	494714.978	4540212.299
	CLOT.	25.000	182787.571	358387.192	4613966.857		1968.502	31.5709	358399.089	4613988.845
39	RECTA	588.053	182812.571	358399.089	4613988.845			31.5760	0.4759068	0.8794957
	CLOT.	40.000	183400.624	358678.948	4614506.035		6324.555	31.5760	358678.948	4614506.035
40	CIRC.	159.413	183440.624	358697.984	4614541.215	1000000.000		31.5773	1238184.190	4138616.837
	CLOT.	40.000	183600.037	358773.864	4614681.410		6324.555	31.5874	358792.907	4614716.586
41	RECTA	173.506	183640.037	358792.907	4614716.586			31.5887	0.4760822	0.8794008
	CLOT.	50.000	183813.543	358875.510	4614869.168		1024.695	31.5887	358875.510	4614869.168
42	CIRC.	215.906	183863.543	358899.332	4614913.128	21000.000		31.6645	377354.833	4604893.425
	CLOT.	50.000	184079.449	359003.320	4615102.341		1024.695	32.3190	359027.662	4615146.016
	CLOT.	50.000	184129.449	359027.662	4615146.016		1024.695	32.3948	359027.662	4615146.016
43	CIRC.	215.906	184179.449	359052.003	4615189.690	-21000.000		32.3190	340700.490	4625398.606
	CLOT.	50.000	184395.355	359155.992	4615378.903		1024.695	31.6645	359179.813	4615422.863
44	RECTA	360.577	184445.355	359179.813	4615422.863			31.5887	0.4760822	0.8794008
	CLOT.	30.000	184805.932	359351.477	4615739.955		6708.204	31.5887	359351.477	4615739.955
45	CIRC.	131.525	184835.932	359365.760	4615766.337	-1500000.000		31.5881	-959742.592	5329876.381
	CLOT.	30.000	184967.456	359428.370	4615882.003		6708.204	31.5825	359442.650	4615908.387
46	RECTA	1178.442	184997.456	359442.650	4615908.387			31.5818	0.4759875	0.8794521
47	CIRC.	120.121	186175.899	360003.574	4616944.770	600000.000		31.5818	887674.815	4331352.296
48	RECTA	1249.728	186296.020	360060.761	4617050.405			31.5946	0.4761635	0.8793568
	CLOT.	205.000	187545.748	360655.835	4618149.362		802.986	31.5946	360655.835	4618149.362

Istram 20.08.08.26 11/02/21 08:29:16 200009 pagina 3
PROYECTO : ESTUDIO INFORMATIVO DE LA INTEGRACION DEL FFCC EN VALLADOLID
GRUPO : 1 : EJES ANCHO 1435 ALTERNATIVA 2
EJE : 74 : VIA 1 UIC

* * * LISTADO DE LAS ALINEACIONES * * *

DATO	TIPO	LONGITUD	P.K.	X TANGENCIA	Y TANGENCIA	RADIO	PARAMETRO	AZIMUT	Cos/Xc/Xinf	Sen/Yc/Yinf
49	CIRC.	5.234	187750.748	360755.397	4618328.551	3145.300		33.6692	363470.971	4616741.551
50	RECTA	0.000	187755.982	360758.041	4618333.068			33.7752	0.5059984	0.8625344
			187755.982	360758.041	4618333.068			33.7752		

Istram 20.08.08.26 11/02/21 08:38:59 200009 pagina 1
PROYECTO : ESTUDIO INFORMATIVO DE LA INTEGRACION DEL FFCC EN VALLADOLID
GRUPO : 10 : EJES ANCHO MIXTO ALTERNATIVA 2
EJE : 80 : RAMAL MIXTO

* * * LISTADO DE LAS ALINEACIONES * * *

DATO	TIPO	LONGITUD	P.K.	X TANGENCIA	Y TANGENCIA	RADIO	PARAMETRO	AZIMUT	Cos/Xc/Xinf	Sen/Yc/Yinf
1	RECTA	12.537	0.000	360342.445	4617546.122			37.1524	0.5510220	0.8344907
	CLOT.	30.893	12.537	360349.353	4617556.584		81.118	37.1524	360349.353	4617556.584
2	CIRC.	19.615	43.429	360366.990	4617581.939	213.000		41.7690	360535.765	4617452.001
			63.044	360379.654	4617596.909			47.6316		

PUNTOS SINGULARES EN ALZADO ANCHO 1.668 mm

Istram 20.08.08.26 04/02/21 10:08:09 200009 pagina 1
PROYECTO : ESTUDIO INFORMATIVO DE LA INTEGRACION DEL FFCC EN VALLADOLID
GRUPO : 2 : EJES ANCHO 1668 ALTERNATIVA 2
EJE : 100 : MANGO SUR IBERICO

* * * ESTADO DE RASANTES * * *

PENDIENTE	LONGITUD	PARAMETRO	VÉRTICE		ENTRADA AL ACUERDO		SALIDA DEL ACUERDO		BISECT.	DIF.PEN
(o/oo)	(m.)	(kv)	PK	Z	PK	Z	PK	Z	(m.)	(%)
					0.000	692.204				
-0.438570	40.000	41028.318	52.592	692.181	32.592	692.190	72.592	692.152	0.005	-0.097
-1.413506							176.525	692.006		

Istram 20.08.08.26 04/02/21 10:08:34 200009 pagina 1
PROYECTO : ESTUDIO INFORMATIVO DE LA INTEGRACION DEL FFCC EN VALLADOLID
GRUPO : 2 : EJES ANCHO 1668 ALTERNATIVA 2
EJE : 17 : VIA 2E IBERICO

* * * ESTADO DE RASANTES * * *

PENDIENTE	LONGITUD	PARAMETRO	VÉRTICE		ENTRADA AL ACUERDO		SALIDA DEL ACUERDO		BISECT.	DIF.PEN
(o/oo)	(m.)	(kv)	PK	Z	PK	Z	PK	Z	(m.)	(%)
					-38.353	692.050				
-1.520390	30.000	19731.780	15.814	691.968	0.814	691.991	30.814	691.968	0.006	0.152
0.000000	30.000	28224.114	80.031	691.968	65.031	691.968	95.031	691.952	0.004	-0.106
-1.062921							193.797	691.847		

Istram 20.08.08.26 04/02/21 10:08:55 200009 pagina 1
PROYECTO : ESTUDIO INFORMATIVO DE LA INTEGRACION DEL FFCC EN VALLADOLID
GRUPO : 2 : EJES ANCHO 1668 ALTERNATIVA 2
EJE : 36 : VIA 1E IBERICO

* * * ESTADO DE RASANTES * * *

PENDIENTE	LONGITUD	PARAMETRO	VÉRTICE		ENTRADA AL ACUERDO		SALIDA DEL ACUERDO		BISECT.	DIF.PEN
(o/oo)	(m.)	(kv)	PK	Z	PK	Z	PK	Z	(m.)	(%)
					0.000	692.028				
2.482763	30.000	17397.260	65.014	692.190	50.014	692.152	80.014	692.201	0.006	-0.172
0.758353	30.000	305023.259	122.569	692.233	107.569	692.222	137.569	692.243	0.000	-0.010
0.660000	30.000	99334.521	189.977	692.278	174.977	692.268	204.977	692.292	0.001	0.030
0.962010							251.468	692.337		

Istram 20.08.08.26 04/02/21 10:07:45 200009 pagina 1
PROYECTO : ESTUDIO INFORMATIVO DE LA INTEGRACION DEL FFCC EN VALLADOLID
GRUPO : 2 : EJES ANCHO 1668 ALTERNATIVA 2
EJE : 69 : VIA 8 IBERICO

* * * ESTADO DE RASANTES * * *

PENDIENTE	LONGITUD	PARAMETRO	VÉRTICE		ENTRADA AL ACUERDO		SALIDA DEL ACUERDO		BISECT.	DIF.PEN
(o/oo)	(m.)	(kv)	PK	Z	PK	Z	PK	Z	(m.)	(%)
					-64.356	692.194				
0.438569	38.398	20732.343	-13.715	692.216	-32.914	692.207	5.484	692.189	0.009	-0.185
-1.413500	30.000	29600.395	77.265	692.087	62.265	692.108	92.265	692.081	0.004	0.101
-0.400000	30.000	43473.220	143.653	692.061	128.653	692.067	158.653	692.044	0.003	-0.069
-1.090080	30.000	51655.635	343.798	691.842	328.798	691.859	358.798	691.835	0.002	0.058
-0.509311	115.000	38537.456	464.388	691.781	406.888	691.810	521.888	691.923	0.043	0.298
2.474799	30.000	11651.395	674.757	692.302	659.757	692.264	689.757	692.300	0.010	-0.257
-0.100000	30.000	30224.624	769.523	692.292	754.523	692.294	784.523	692.306	0.004	0.099
0.892568							789.308	692.310		

Istram 20.08.08.26 04/02/21 10:07:22 200009 pagina 1
PROYECTO : ESTUDIO INFORMATIVO DE LA INTEGRACION DEL FFCC EN VALLADOLID
GRUPO : 2 : EJES ANCHO 1668 ALTERNATIVA 2
EJE : 71 : VIA 7 IBERICO

* * * ESTADO DE RASANTES * * *

PENDIENTE	LONGITUD	PARAMETRO	VÉRTICE		ENTRADA AL ACUERDO		SALIDA DEL ACUERDO		BISECT.	DIF.PEN
(o/oo)	(m.)	(kv)	PK	Z	PK	Z	PK	Z	(m.)	(%)
					-38.353	692.118				
-1.518817	30.000	19752.209	51.756	691.981	36.756	692.004	66.756	691.981	0.006	0.152
0.000000	30.000	27519.464	116.585	691.981	101.585	691.981	131.585	691.965	0.004	-0.109
-1.090137	30.000	51294.314	244.535	691.842	229.535	691.858	259.535	691.834	0.002	0.058
-0.505277	115.329	38699.878	364.304	691.781	306.640	691.810	421.969	691.924	0.043	0.298
2.474799	30.000	14637.069	540.884	692.218	525.884	692.181	555.884	692.224	0.008	-0.205
0.425208	90.000	167659.123	634.050	692.258	589.050	692.238	679.050	692.301	0.006	0.054
0.962012							761.020	692.380		

Istram 20.08.08.26 04/02/21 10:06:36 *200009* pagina 1
PROYECTO : ESTUDIO INFORMATIVO DE LA INTEGRACION DEL FFCC EN VALLADOLID
GRUPO : 2 : EJES ANCHO 1668 ALTERNATIVA 2
EJE : 77 : VIA 1 - VIA 6 IBERICO

* * * ESTADO DE RASANTES * * *

PENDIENTE	LONGITUD	PARAMETRO	VÉRTICE		ENTRADA AL ACUERDO		SALIDA DEL ACUERDO		BISECT.	DIF.PEN
(o/oo)	(m.)	(kv)	PK	Z	PK	Z	PK	Z	(m.)	(%)
					243513.731	695.721				
-5.591298	631.437	129999.660	244404.580	690.740	244088.861	692.505	244720.298	690.508	0.383	0.486
-0.734082	203.310	247395.062	245739.581	689.760	245637.926	689.835	245841.235	689.769	0.021	0.082
0.087719	159.918	227007.690	246537.580	689.830	246457.621	689.823	246617.539	689.893	0.014	0.070
0.792180	58.623	21469.717	247657.275	690.717	247627.964	690.694	247686.587	690.820	0.020	0.273
3.522695	28.502	156220.650	247760.605	691.081	247746.354	691.031	247774.856	691.134	0.001	0.018
3.705140	149.608	35743.860	248075.303	692.247	248000.499	691.970	248150.107	692.211	0.078	-0.419
-0.480415	42.188	46104.037	248216.236	692.179	248195.143	692.189	248237.330	692.188	0.005	0.092
0.434639	50.000	25667.630	248308.998	692.220	248283.998	692.209	248333.998	692.182	0.012	-0.195
-1.513340	50.000	49718.835	248509.038	691.917	248484.038	691.955	248534.038	691.904	0.006	0.101
-0.507685	115.423	38700.387	248776.691	691.781	248718.979	691.810	248834.403	691.924	0.043	0.298
2.474799	30.000	14715.893	248953.271	692.218	248938.271	692.181	248968.271	692.225	0.008	-0.204
0.436187	30.000	57450.562	249043.740	692.257	249028.740	692.251	249058.740	692.272	0.002	0.052
0.958375	64.440	15751.528	249406.747	692.605	249374.527	692.574	249438.967	692.768	0.033	0.409
5.049409	101.141	77773.521	249734.588	694.261	249684.018	694.005	249785.158	694.450	0.016	-0.130
3.748958	79.995	76326.733	249950.445	695.070	249910.448	694.920	249990.443	695.262	0.010	0.105
4.797021	101.970	111785.360	250186.008	696.200	250135.023	695.955	250236.993	696.398	0.012	-0.091
3.884829	80.010	14674.735	250397.601	697.022	250357.596	696.867	250437.606	696.959	0.055	-0.545
-1.567394	119.998	47092.865	250613.245	696.684	250553.246	696.778	250673.244	696.743	0.038	0.255
0.980717	99.999	65205.131	250966.048	697.030	250916.048	696.981	251016.048	697.002	0.019	-0.153
-0.552893	79.999	93916.703	251459.814	696.757	251419.814	696.779	251499.814	696.769	0.009	0.085
0.298916	80.006	158128.043	251633.776	696.809	251593.773	696.797	251673.779	696.801	0.005	-0.051
-0.207044	79.882	2713067.879	251855.951	696.763	251816.010	696.771	251895.892	696.756	0.000	0.003
-0.177600	80.002	129644.929	252098.068	696.720	252058.067	696.727	252138.069	696.738	0.006	0.062
0.439485	179.704	3656426.477	252382.492	696.845	252292.640	696.806	252472.344	696.880	0.001	-0.005
0.390337	180.029	461213.780	253676.245	697.350	253586.231	697.315	253766.259	697.350	0.009	-0.039
0.000000	180.003	133923.601	254106.246	697.350	254016.245	697.350	254196.247	697.471	0.030	0.134
1.344069	179.998	127500.316	254545.211	697.940	254455.212	697.819	254635.210	697.934	0.032	-0.141
-0.067678	180.023	2053242.628	255136.246	697.900	255046.235	697.906	255226.258	697.902	0.002	0.009
0.020000	178.558	61313423.904	256536.270	697.928	256446.991	697.926	256625.549	697.930	0.000	0.000
0.022912	228.808	10571.851	257060.016	697.940	256945.612	697.937	257174.420	700.419	0.619	2.164
21.666024	666.200	20399.000	257716.758	712.169	257383.658	704.952	258049.858	708.507	2.720	-3.266
-10.992460							258095.927	708.001		

Istram 20.08.08.26 04/02/21 10:09:25 *200009* pagina 1
PROYECTO : ESTUDIO INFORMATIVO DE LA INTEGRACION DEL FFCC EN VALLADOLID
GRUPO : 2 : EJES ANCHO 1668 ALTERNATIVA 2
EJE : 78 : VIA 8 TRES HERMANOS

* * * ESTADO DE RASANTES * * *

PENDIENTE	LONGITUD	PARAMETRO	VÉRTICE		ENTRADA AL ACUERDO		SALIDA DEL ACUERDO		BISECT.	DIF.PEN
(o/oo)	(m.)	(kv)	PK	Z	PK	Z	PK	Z	(m.)	(%)
					-79.102	697.141				
0.390639	182.410	466952.860	455.568	697.350	364.363	697.314	546.773	697.350	0.009	-0.039
0.000000							656.318	697.350		

Istram 20.08.08.26 04/02/21 10:09:48 *200009* pagina 1
PROYECTO : ESTUDIO INFORMATIVO DE LA INTEGRACION DEL FFCC EN VALLADOLID
GRUPO : 2 : EJES ANCHO 1668 ALTERNATIVA 2
EJE : 83 : VIA 10 TRES HERMANOS

* * * ESTADO DE RASANTES * * *

PENDIENTE	LONGITUD	PARAMETRO	VÉRTICE		ENTRADA AL ACUERDO		SALIDA DEL ACUERDO		BISECT.	DIF.PEN
(o/oo)	(m.)	(kv)	PK	Z	PK	Z	PK	Z	(m.)	(%)
					-46.825	697.120				
0.391660	189.319	483375.732	539.281	697.350	444.621	697.313	633.940	697.350	0.009	-0.039
0.000000							795.136	697.350		

PUNTOS SINGULARES EN ALZADO ANCHO 1.435 mm

Istram 20.08.08.26 11/02/21 08:42:53 200009 pagina 1
PROYECTO : ESTUDIO INFORMATIVO DE LA INTEGRACION DEL FFCC EN VALLADOLID
GRUPO : 1 : EJES ANCHO 1435 ALTERNATIVA 2
EJE : 2 : VIA 2 UIC

* * * ESTADO DE RASANTES * * *

PENDIENTE	LONGITUD	PARAMETRO	VÉRTICE		ENTRADA AL ACUERDO		SALIDA DEL ACUERDO		BISECT.	DIF.PEN
(o/oo)	(m.)	(kv)	PK	Z	PK	Z	PK	Z	(m.)	(%)
					174172.653	695.721				
-5.591296	631.437	129999.836	175063.502	690.740	174747.783	692.505	175379.220	690.508	0.383	0.486
-0.734082	203.000	247018.308	176398.502	689.760	176297.002	689.835	176500.002	689.769	0.021	0.082
0.087719	160.000	227125.704	177196.504	689.830	177116.504	689.823	177276.504	689.893	0.014	0.070
0.792175	133.000	339134.529	178000.439	690.467	177933.939	690.414	178066.939	690.493	0.007	-0.039
0.400000	132.999	42591.703	178276.549	690.577	178210.050	690.551	178343.049	690.812	0.052	0.312
3.522660	237.164	64059.829	178754.464	692.261	178635.882	691.843	178873.046	692.240	0.110	-0.370
-0.179574	49.262	59995.756	178965.143	692.223	178940.513	692.227	178989.774	692.198	0.005	-0.082
-1.000659	44.016	43501.890	179126.037	692.062	179104.029	692.084	179148.045	692.018	0.006	-0.101
-2.012475	54.449	36299.538	179206.038	691.901	179178.814	691.956	179233.263	691.887	0.010	0.150
-0.512493	56.648	40000.126	179356.284	691.824	179327.961	691.839	179384.608	691.850	0.010	0.142
0.903697	49.704	40000.874	179491.285	691.946	179466.434	691.924	179516.137	691.999	0.008	0.124
2.146261	25.396	14599.707	179618.017	692.218	179605.319	692.191	179630.715	692.223	0.006	-0.174
0.406775	53.424	97505.294	179699.143	692.251	179672.431	692.240	179725.856	692.277	0.004	0.055
0.954688	44.000	15266.192	180005.002	692.543	179983.002	692.522	180027.002	692.627	0.016	0.288
3.836874	77.637	92023.256	180153.138	693.111	180114.320	692.962	180191.957	693.293	0.008	0.084
4.680542	200.004	251847.960	180671.372	695.537	180571.370	695.069	180771.374	695.926	0.020	-0.079
3.886396	99.999	18335.848	181053.476	697.022	181003.476	696.828	181103.476	696.944	0.068	-0.545
-1.567374	119.997	47093.179	181269.123	696.684	181209.125	696.778	181329.122	696.743	0.038	0.255
0.980709	132.998	86722.607	181621.929	697.030	181555.430	696.965	181688.428	696.993	0.025	-0.153
-0.552888	132.998	354393.609	181912.229	696.869	181845.729	696.906	181978.728	696.858	0.006	0.038
-0.177604	133.000	218892.577	182753.971	696.720	182687.471	696.732	182820.471	696.749	0.010	0.061
0.430000	130.000	3281389.146	183106.469	696.872	183041.469	696.844	183171.469	696.897	0.001	-0.004
0.390383	180.000	461086.086	184332.000	697.350	184242.000	697.315	184422.000	697.350	0.009	-0.039
0.000000	180.002	133923.337	184761.998	697.350	184671.997	697.350	184852.000	697.471	0.030	0.134
1.344071	179.998	127500.076	185200.963	697.940	185110.964	697.819	185290.962	697.934	0.032	-0.141
-0.067678	180.000	2052965.835	185791.998	697.900	185701.998	697.906	185881.998	697.902	0.002	0.009
0.020000	180.000	62161499.510	187191.988	697.928	187101.988	697.926	187281.988	697.930	0.000	0.000
0.022896	229.112	10600.004	187716.101	697.940	187601.545	697.937	187830.657	700.419	0.619	2.161
21.637247	666.788	20434.997	188373.717	712.169	188040.323	704.955	188707.111	708.504	2.720	-3.263
-10.992460							188752.886	708.001		

Istram 20.08.08.26 11/02/21 08:43:45 200009 pagina 1
PROYECTO : ESTUDIO INFORMATIVO DE LA INTEGRACION DEL FFCC EN VALLADOLID
GRUPO : 1 : EJES ANCHO 1435 ALTERNATIVA 2
EJE : 35 : VIA 4 UIC

* * * ESTADO DE RASANTES * * *

PENDIENTE	LONGITUD	PARAMETRO	VÉRTICE		ENTRADA AL ACUERDO		SALIDA DEL ACUERDO		BISECT.	DIF.PEN
(o/oo)	(m.)	(kv)	PK	Z	PK	Z	PK	Z	(m.)	(%)
					-18.169	692.177				
-0.990696	27.500	16920.858	104.819	692.055	91.069	692.069	118.569	692.019	0.006	-0.163
-2.615909	27.500	13079.396	160.309	691.910	146.559	691.946	174.059	691.903	0.007	0.210
-0.513365	56.680	39998.310	327.831	691.824	299.491	691.839	356.171	691.850	0.010	0.142
0.903704	49.705	40002.395	462.831	691.946	437.979	691.924	487.683	691.999	0.008	0.124
2.146244	25.416	14599.364	589.564	692.218	576.856	692.191	602.272	692.223	0.006	-0.174
0.405320	53.110	97507.257	669.703	692.250	643.148	692.240	696.258	692.276	0.004	0.054
0.949999	30.000	2917003.942	885.521	692.456	870.521	692.441	900.521	692.470	0.000	0.001
0.960284							949.522	692.517		

Istram 20.08.08.26 11/02/21 08:44:13 200009 pagina 1
PROYECTO : ESTUDIO INFORMATIVO DE LA INTEGRACION DEL FFCC EN VALLADOLID
GRUPO : 1 : EJES ANCHO 1435 ALTERNATIVA 2
EJE : 38 : VIA 5 UIC

* * * ESTADO DE RASANTES * * *

PENDIENTE	LONGITUD	PARAMETRO	VÉRTICE		ENTRADA AL ACUERDO		SALIDA DEL ACUERDO		BISECT.	DIF.PEN
(o/oo)	(m.)	(kv)	PK	Z	PK	Z	PK	Z	(m.)	(%)
					-35.893	692.147				
-0.977336	27.500	14303.073	17.251	692.095	3.501	692.108	31.001	692.055	0.007	-0.192
-2.900000	27.500	11495.745	74.385	691.929	60.635	691.969	88.135	691.922	0.008	0.239
-0.507811	115.427	38700.180	366.513	691.781	308.799	691.810	424.226	691.924	0.043	0.298
2.474785	30.381	14599.182	543.094	692.218	527.903	692.180	558.284	692.224	0.008	-0.208
0.393763	45.567	72763.769	634.890	692.254	612.106	692.245	657.674	692.277	0.004	0.063
1.020000	27.500	393045.437	732.152	692.353	718.402	692.339	745.902	692.366	0.000	-0.007
0.950034							808.646	692.426		

Istram 20.08.08.26 11/02/21 08:43:19 200009 pagina 1
PROYECTO : ESTUDIO INFORMATIVO DE LA INTEGRACION DEL FFCC EN VALLADOLID
GRUPO : 1 : EJES ANCHO 1435 ALTERNATIVA 2
EJE : 39 : VIA 3 UIC

* * * ESTADO DE RASANTES * * *

PENDIENTE	LONGITUD	PARAMETRO	VÉRTICE		ENTRADA AL ACUERDO		SALIDA DEL ACUERDO		BISECT.	DIF.PEN
(o/oo)	(m.)	(kv)	PK	Z	PK	Z	PK	Z	(m.)	(%)
					-35.893	692.195				
-0.999998	27.000	16522.153	106.041	692.053	92.541	692.066	119.541	692.017	0.006	-0.163
-2.634167	27.000	12731.032	160.309	691.910	146.809	691.946	173.809	691.903	0.007	0.212
-0.513365	56.680	39998.309	327.831	691.824	299.491	691.839	356.171	691.850	0.010	0.142
0.903704	49.704	40001.305	462.831	691.946	437.979	691.924	487.683	691.999	0.008	0.124
2.146261	25.414	14599.562	589.563	692.218	576.856	692.191	602.270	692.223	0.006	-0.174
0.405506	67.794	122200.114	672.364	692.252	638.467	692.238	706.260	692.284	0.005	0.055
0.960283							818.117	692.392		

Istram 20.08.08.26 11/02/21 08:44:59 200009 pagina 1
PROYECTO : ESTUDIO INFORMATIVO DE LA INTEGRACION DEL FFCC EN VALLADOLID
GRUPO : 1 : EJES ANCHO 1435 ALTERNATIVA 2
EJE : 63 : VIA M1 UIC ESTACION VALLADOLID

* * * ESTADO DE RASANTES * * *

PENDIENTE	LONGITUD	PARAMETRO	VÉRTICE		ENTRADA AL ACUERDO		SALIDA DEL ACUERDO		BISECT.	DIF.PEN
(o/oo)	(m.)	(kv)	PK	Z	PK	Z	PK	Z	(m.)	(%)
					-17.719	692.313				
-0.959437	22.126	14601.005	158.450	692.144	147.387	692.155	169.513	692.117	0.004	-0.152
-2.474786	110.481	38700.428	302.669	691.787	247.429	691.924	357.910	691.808	0.039	0.285
0.379996							357.762	691.808		

Istram 20.08.08.26 11/02/21 08:45:28 200009 pagina 1
PROYECTO : ESTUDIO INFORMATIVO DE LA INTEGRACION DEL FFCC EN VALLADOLID
GRUPO : 1 : EJES ANCHO 1435 ALTERNATIVA 2
EJE : 62 : VIA M2 UIC ESTACION VALLADOLID

* * * ESTADO DE RASANTES * * *

PENDIENTE	LONGITUD	PARAMETRO	VÉRTICE		ENTRADA AL ACUERDO		SALIDA DEL ACUERDO		BISECT.	DIF.PEN
(o/oo)	(m.)	(kv)	PK	Z	PK	Z	PK	Z	(m.)	(%)
					-19.506	692.233				
-0.922790	22.660	14600.480	71.248	692.149	59.918	692.160	82.578	692.121	0.004	-0.155
-2.474785	110.481	38700.447	217.600	691.787	162.359	691.924	272.840	691.808	0.039	0.285
0.379996							272.692	691.808		

Istram 20.08.08.26 11/02/21 08:41:26 *200009* pagina 1
PROYECTO : ESTUDIO INFORMATIVO DE LA INTEGRACION DEL FFCC EN VALLADOLID
GRUPO : 1 : EJES ANCHO 1435 ALTERNATIVA 2
EJE : 74 : VIA 1 UIC

* * * ESTADO DE RASANTES * * *

PENDIENTE	LONGITUD	PARAMETRO	VÉRTICE		ENTRADA AL ACUERDO		SALIDA DEL ACUERDO		BISECT.	DIF.PEN
(o/oo)	(m.)	(kv)	PK	Z	PK	Z	PK	Z	(m.)	(%)
					174170.822	695.721				
-5.591295	631.437	129999.853	175061.671	690.740	174745.953	692.505	175377.389	690.508	0.383	0.486
-0.734082	203.309	247394.705	176396.671	689.760	176295.016	689.835	176498.326	689.769	0.021	0.082
0.087719	159.918	227007.338	177194.671	689.830	177114.712	689.823	177274.630	689.893	0.014	0.070
0.792181	58.624	21470.272	178314.365	690.717	178285.053	690.694	178343.677	690.820	0.020	0.273
3.522660	31.347	188973.945	178417.696	691.081	178402.022	691.026	178433.370	691.139	0.001	0.017
3.688543	150.352	36100.084	178733.810	692.247	178658.634	691.970	178808.986	692.211	0.078	-0.416
-0.476310	42.500	46861.522	178875.942	692.179	178854.692	692.189	178897.192	692.188	0.005	0.091
0.430617	42.500	29683.766	178964.703	692.218	178943.453	692.208	178985.953	692.196	0.008	-0.143
-1.001142	43.996	43502.157	179120.049	692.062	179098.051	692.084	179142.047	692.018	0.006	-0.101
-2.012500	54.453	36301.711	179200.049	691.901	179172.822	691.956	179227.275	691.887	0.010	0.150
-0.512489	56.648	39999.940	179350.296	691.824	179321.972	691.839	179378.620	691.850	0.010	0.142
0.903704	49.704	40001.305	179485.296	691.946	179460.444	691.924	179510.148	691.999	0.008	0.124
2.146261	25.396	14599.707	179612.028	692.218	179599.330	692.191	179624.726	692.223	0.006	-0.174
0.406775	53.501	97465.260	179693.154	692.251	179666.403	692.240	179719.904	692.277	0.004	0.055
0.955699	65.082	15823.000	180064.660	692.606	180032.119	692.575	180097.201	692.771	0.033	0.411
5.068815	100.408	77172.073	180391.250	694.261	180341.046	694.007	180441.454	694.451	0.016	-0.130
3.767720	80.001	76338.332	180605.843	695.070	180565.843	694.919	180645.844	695.263	0.010	0.105
4.815703	100.001	107510.162	180840.492	696.200	180790.492	695.959	180890.493	696.394	0.012	-0.093
3.885551	80.000	14670.984	181052.045	697.022	181012.046	696.867	181092.045	696.959	0.055	-0.545
-1.567369	119.999	47093.802	181267.693	696.684	181207.694	696.778	181327.693	696.743	0.038	0.255
0.980717	99.999	65205.136	181620.496	697.030	181570.497	696.981	181670.496	697.002	0.019	-0.153
-0.552893	79.999	93916.703	182114.262	696.757	182074.263	696.779	182154.262	696.769	0.009	0.085
0.298916	80.007	158129.024	182288.224	696.809	182248.221	696.797	182328.228	696.801	0.005	-0.051
-0.207042	79.890	2713592.256	182510.401	696.763	182470.457	696.771	182550.346	696.756	0.000	0.003
-0.177602	80.002	129644.403	182752.516	696.720	182712.516	696.727	182792.517	696.738	0.006	0.062
0.439485	179.924	3665399.713	183036.940	696.845	182946.978	696.805	183126.903	696.880	0.001	-0.005
0.390397	180.001	461071.608	184330.494	697.350	184240.493	697.315	184420.495	697.350	0.009	-0.039
0.000000	180.003	133923.604	184760.511	697.350	184670.509	697.350	184850.512	697.471	0.030	0.134
1.344069	179.998	127500.318	185199.476	697.940	185109.477	697.819	185289.475	697.934	0.032	-0.141
-0.067678	180.022	2053219.514	185790.511	697.900	185700.500	697.906	185880.522	697.902	0.002	0.009
0.020000	179.336	61848689.002	187190.500	697.928	187100.832	697.926	187280.168	697.930	0.000	0.000
0.022900	228.819	10572.918	187714.524	697.940	187600.114	697.937	187828.933	700.419	0.619	2.164
21.664920	666.223	20400.380	188371.300	712.169	188038.188	704.952	188704.411	708.507	2.720	-3.266
-10.992460							188750.469	708.001		

Istram 20.08.08.26 11/02/21 08:45:53 *200009* pagina 1
PROYECTO : ESTUDIO INFORMATIVO DE LA INTEGRACION DEL FFCC EN VALLADOLID
GRUPO : 10 : EJES ANCHO MIXTO ALTERNATIVA 2
EJE : 80 : RAMAL MIXTO

* * * ESTADO DE RASANTES * * *

PENDIENTE	LONGITUD	PARAMETRO	VÉRTICE		ENTRADA AL ACUERDO		SALIDA DEL ACUERDO		BISECT.	DIF.PEN
(o/oo)	(m.)	(kv)	PK	Z	PK	Z	PK	Z	(m.)	(%)
					-46.828	697.921				
0.022912							63.044	697.923		

PUNTOS DEL EJE CADA 20 M ANCHO 1.668 MM

Istram 20.08.08.26 10/02/21 11:52:43 200009 pagina 1
PROYECTO : ESTUDIO INFORMATIVO DE LA INTEGRACION DEL FFCC EN VALLADOLID
GRUPO : 2 : EJES ANCHO 1668 ALTERNATIVA 2
EJE : 100 : MANGO SUR IBERICO

* * * PUNTOS DEL EJE EN PLANTA * * *

TIPO	P.K.	X	Y	RADIO	Z RAS IZ.	Z RAS DR.	AZIMUT	DIST. EJE	PEN(o/oo)	PERAL_I	PERAL_D	HILO BAJO	ZT (eje)	Z TERR.
CIRC. Pendiente	0.000	355844.102	4611310.640	445.000	692.204	692.204	69.756106	0.000	-0.439	0.00	0.00	692.204	692.083	692.083
CIRC. Pendiente	20.000	355862.087	4611319.385	445.000	692.195	692.195	72.617319	0.000	-0.439	0.00	0.00	692.195	692.003	692.003
CIRC. KV -41028	40.000	355880.447	4611327.313	445.000	692.186	692.186	75.478531	0.000	-0.619	0.00	0.00	692.186	692.020	692.020
CLOT. KV -41028	46.285	355886.288	4611329.634	445.000	692.181	692.181	76.377712	0.000	-0.772	0.00	0.00	692.181	692.048	692.048
CLOT. KV -41028	60.000	355899.141	4611334.416	494.760	692.168	692.168	78.241079	0.000	-1.107	0.00	0.00	692.168	692.049	692.049
CIRC. KV -41028	61.285	355900.353	4611334.845	500.000	692.167	692.167	78.405596	0.000	-1.138	0.00	0.00	692.167	692.047	692.047
CIRC. Pendiente	80.000	355918.114	4611340.740	500.000	692.142	692.142	80.788424	0.000	-1.414	0.00	0.00	692.142	692.008	692.008
CIRC. Pendiente	100.000	355937.324	4611346.301	500.000	692.114	692.114	83.334904	0.000	-1.414	0.00	0.00	692.114	691.981	691.981
RECTA Pendiente	103.109	355940.329	4611347.096	0.000	692.109	692.109	83.730730	0.000	-1.414	0.00	0.00	692.109	691.971	691.971
RECTA Pendiente	120.000	355956.672	4611351.366	0.000	692.085	692.085	83.730730	0.000	-1.414	0.00	0.00	692.085	691.881	691.881
RECTA Pendiente	138.173	355974.254	4611355.960	0.000	692.060	692.060	83.730730	0.000	-1.414	0.00	0.00	692.060	691.887	691.887

Istram 20.08.08.26 10/02/21 11:53:40 200009 pagina 1
PROYECTO : ESTUDIO INFORMATIVO DE LA INTEGRACION DEL FFCC EN VALLADOLID
GRUPO : 2 : EJES ANCHO 1668 ALTERNATIVA 2
EJE : 36 : VIA 1E IBERICO

* * * PUNTOS DEL EJE EN PLANTA * * *

TIPO	P.K.	X	Y	RADIO	Z RAS IZ.	Z RAS DR.	AZIMUT	DIST. EJE	PEN(o/oo)	PERAL_I	PERAL_D	HILO BAJO	ZT (eje)	Z TERR.
RECTA Rampa	0.000	356408.094	4611523.530	0.000	692.028	692.028	73.794987	0.000	2.483	0.00	0.00	692.028	691.931	691.931
RECTA Rampa	20.000	356426.424	4611531.532	0.000	692.078	692.078	73.794987	0.000	2.483	0.00	0.00	692.078	691.940	691.940
RECTA Rampa	40.000	356444.753	4611539.534	0.000	692.128	692.128	73.794987	0.000	2.483	0.00	0.00	692.128	691.887	691.887
RECTA KV -17397	60.000	356463.083	4611547.536	0.000	692.174	692.174	73.794987	0.000	1.909	0.00	0.00	692.174	691.982	691.982
RECTA KV -17397	80.000	356481.412	4611555.538	0.000	692.201	692.201	73.794987	0.000	0.759	0.00	0.00	692.201	692.000	692.000
RECTA Rampa	100.000	356499.741	4611563.540	0.000	692.216	692.216	73.794987	0.000	0.758	0.00	0.00	692.216	692.000	692.000
CIRC. Rampa	107.256	356506.392	4611566.443	-300.000	692.222	692.222	73.794987	0.000	0.758	0.00	0.00	692.222	691.992	691.992
CIRC. KV -305023	120.000	356517.959	4611571.788	-300.000	692.231	692.231	71.090721	0.000	0.718	0.00	0.00	692.231	691.977	691.977
CIRC. Rampa	140.000	356535.627	4611581.154	-300.000	692.245	692.245	66.846589	0.000	0.660	0.00	0.00	692.245	691.901	691.901
CIRC. Rampa	160.000	356552.631	4611591.676	-300.000	692.258	692.258	62.602457	0.000	0.660	0.00	0.00	692.258	691.847	691.847
RECTA Rampa	172.835	356563.159	4611599.016	0.000	692.267	692.267	59.878686	0.000	0.660	0.00	0.00	692.267	691.924	691.924
RECTA KV 99335	180.000	356568.947	4611603.238	0.000	692.271	692.271	59.878686	0.000	0.711	0.00	0.00	692.271	691.967	691.967
RECTA KV 99335	200.000	356585.105	4611615.025	0.000	692.288	692.288	59.878686	0.000	0.912	0.00	0.00	692.288	692.016	692.016
RECTA Rampa	213.115	356595.701	4611622.753	0.000	692.300	692.300	59.878686	0.000	0.962	0.00	0.00	692.300	692.015	692.015

Istram 20.08.08.26 10/02/21 11:53:08 200009 pagina 1
PROYECTO : ESTUDIO INFORMATIVO DE LA INTEGRACION DEL FFCC EN VALLADOLID
GRUPO : 2 : EJES ANCHO 1668 ALTERNATIVA 2
EJE : 100 : MANGO SUR IBERICO

* * * PUNTOS DEL EJE EN PLANTA * * *

TIPO	P.K.	X	Y	RADIO	Z RAS IZ.	Z RAS DR.	AZIMUT	DIST. EJE	PEN(o/oo)	PERAL_I	PERAL_D	HILO BAJO	ZT (eje)	Z TERR.
CIRC. Pendiente	0.000	355844.102	4611310.640	445.000	692.204	692.204	69.756106	0.000	-0.439	0.00	0.00	692.204	692.083	692.083
CIRC. Pendiente	20.000	355862.087	4611319.385	445.000	692.195	692.195	72.617319	0.000	-0.439	0.00	0.00	692.195	692.003	692.003
CIRC. KV -41028	40.000	355880.447	4611327.313	445.000	692.186	692.186	75.478531	0.000	-0.619	0.00	0.00	692.186	692.020	692.020
CLOT. KV -41028	46.285	355886.288	4611329.634	445.000	692.181	692.181	76.377712	0.000	-0.772	0.00	0.00	692.181	692.048	692.048
CLOT. KV -41028	60.000	355899.141	4611334.416	494.760	692.168	692.168	78.241079	0.000	-1.107	0.00	0.00	692.168	692.049	692.049
CIRC. KV -41028	61.285	355900.353	4611334.845	500.000	692.167	692.167	78.405596	0.000	-1.138	0.00	0.00	692.167	692.047	692.047
CIRC. Pendiente	80.000	355918.114	4611340.740	500.000	692.142	692.142	80.788424	0.000	-1.414	0.00	0.00	692.142	692.008	692.008
CIRC. Pendiente	100.000	355937.324	4611346.301	500.000	692.114	692.114	83.334904	0.000	-1.414	0.00	0.00	692.114	691.981	691.981
RECTA Pendiente	103.109	355940.329	4611347.096	0.000	692.109	692.109	83.730730	0.000	-1.414	0.00	0.00	692.109	691.971	691.971
RECTA Pendiente	120.000	355956.672	4611351.366	0.000	692.085	692.085	83.730730	0.000	-1.414	0.00	0.00	692.085	691.881	691.881
RECTA Pendiente	138.173	355974.254	4611355.960	0.000	692.060	692.060	83.730730	0.000	-1.414	0.00	0.00	692.060	691.887	691.887

Istram 20.08.08.26 10/02/21 11:52:09 200009 pagina 1
PROYECTO : ESTUDIO INFORMATIVO DE LA INTEGRACION DEL FFCC EN VALLADOLID
GRUPO : 2 : EJES ANCHO 1668 ALTERNATIVA 2
EJE : 69 : VIA 8 IBERICO

* * * PUNTOS DEL EJE EN PLANTA * * *

TIPO	P.K.	X	Y	RADIO	Z RAS IZ.	Z RAS DR.	AZIMUT	DIST. EJE	PEN(o/oo)	PERAL_I	PERAL_D	HILO BAJO	ZT (eje)	Z TERR.
CIRC. KV -20732	0.000	355882.943	4611323.831	500.000	692.196	692.196	75.669330	0.000	-1.149	0.00	0.00	692.196	692.019	692.019
CIRC. Pendiente	20.000	355901.644	4611330.917	500.000	692.168	692.168	78.215809	0.000	-1.414	0.00	0.00	692.168	692.073	692.073
CIRC. Pendiente	40.000	355920.614	4611337.249	500.000	692.140	692.140	80.762288	0.000	-1.414	0.00	0.00	692.140	691.996	691.996
CIRC. Pendiente	60.000	355939.822	4611342.818	500.000	692.112	692.112	83.308767	0.000	-1.414	0.00	0.00	692.112	691.992	691.992
RECTA KV 29600	63.314	355943.025	4611343.666	0.000	692.107	692.107	83.730716	0.000	-1.378	0.00	0.00	692.107	691.986	691.986
RECTA KV 29600	80.000	355959.169	4611347.884	0.000	692.089	692.089	83.730716	0.000	-0.814	0.00	0.00	692.089	691.914	691.914
RECTA Pendiente	100.000	355978.520	4611352.940	0.000	692.078	692.078	83.730716	0.000	-0.400	0.00	0.00	692.078	691.942	691.942
CIRC. Pendiente	102.226	355980.674	4611353.503	400.000	692.077	692.077	83.730716	0.000	-0.400	0.00	0.00	692.077	691.934	691.934
CIRC. Pendiente	120.000	355997.964	4611357.612	400.000	692.070	692.070	86.559522	0.000	-0.400	0.00	0.00	692.070	691.870	691.870
RECTA KV -43473	138.129	356015.771	4611361.009	0.000	692.062	692.062	89.444903	0.000	-0.618	0.00	0.00	692.062	691.911	691.911
RECTA KV -43473	140.000	356017.616	4611361.317	0.000	692.061	692.061	89.444903	0.000	-0.661	0.00	0.00	692.061	691.916	691.916
RECTA Pendiente	160.000	356037.342	4611364.618	0.000	692.043	692.043	89.444903	0.000	-1.090	0.00	0.00	692.043	691.969	691.969
CIRC. Pendiente	166.910	356044.157	4611365.758	-300.000	692.035	692.035	89.444903	0.000	-1.090	0.00	0.00	692.035	691.920	691.920
CIRC. Pendiente	180.000	356057.016	4611368.200	-300.000	692.021	692.021	86.667041	0.000	-1.090	0.00	0.00	692.021	691.827	691.827
CIRC. Pendiente	200.000	356076.426	4611373.007	-300.000	691.999	691.999	82.422910	0.000	-1.090	0.00	0.00	691.999	691.839	691.839
CIRC. Pendiente	220.000	356095.473	4611379.096	-300.000	691.977	691.977	78.178778	0.000	-1.090	0.00	0.00	691.977	691.691	691.691
CIRC. Pendiente	240.000	356114.072	4611386.441	-300.000	691.956	691.956	73.934646	0.000	-1.090	0.00	0.00	691.956	691.676	691.676
RECTA Pendiente	240.658	356114.675	4611386.703	0.000	691.955	691.955	73.794987	0.000	-1.090	0.00	0.00	691.955	691.678	691.678
RECTA Pendiente	260.000	356132.401	4611394.442	0.000	691.934	691.934	73.794987	0.000	-1.090	0.00	0.00	691.934	691.744	691.744
RECTA Pendiente	280.000	356150.731	4611402.444	0.000	691.912	691.912	73.794987	0.000	-1.090	0.00	0.00	691.912	691.747	691.747
RECTA Pendiente	300.000	356169.060	4611410.446	0.000	691.890	691.890	73.794987	0.000	-1.090	0.00	0.00	691.890	691.765	691.765
RECTA Pendiente	320.000	356187.390	4611418.448	0.000	691.868	691.868	73.794987	0.000	-1.090	0.00	0.00	691.868	691.775	691.775
RECTA KV 51656	340.000	356205.719	4611426.450	0.000	691.848	691.848	73.794987	0.000	-0.873	0.00	0.00	691.848	691.776	691.776
RECTA Pendiente	360.000	356224.048	4611434.452	0.000	691.834	691.834	73.794987	0.000	-0.509	0.00	0.00	691.834	691.777	691.777
RECTA Pendiente	380.000	356242.378	4611442.454	0.000	691.824	691.824	73.794987	0.000	-0.509	0.00	0.00	691.824	691.777	691.777
RECTA Pendiente	400.000	356260.707	4611450.456	0.000	691.814	691.814	73.794987	0.000	-0.509	0.00	0.00	691.814	691.787	691.787
RECTA KV 38537	420.000	356279.037	4611458.458	0.000	691.806	691.806	73.794987	0.000	-0.169	0.00	0.00	691.806	691.786	691.786
RECTA KV 38537	440.000	356297.366	4611466.460	0.000	691.808	691.808	73.794987	0.000	0.350	0.00	0.00	691.808	691.782	691.782
RECTA KV 38537	460.000	356315.695	4611474.462	0.000	691.820	691.820	73.794987	0.000	0.869	0.00	0.00	691.820	691.778	691.778
RECTA KV 38537	480.000	356334.025	4611482.464	0.000	691.842	691.842	73.794987	0.000	1.388	0.00	0.00	691.842	691.773	691.773
RECTA KV 38537	500.000	356352.354	4611490.466	0.000	691.875	691.875	73.794987	0.000	1.907	0.00	0.00	691.875	691.779	691.779
RECTA KV 38537	520.000	356370.684	4611498.468	0.000	691.919	691.919	73.794987	0.000	2.426	0.00	0.00	691.919	691.818	691.818
RECTA Rampa	540.000	356389.013	4611506.470	0.000	691.968	691.968	73.794987	0.000	2.475	0.00	0.00	691.968	691.828	691.828
RECTA Rampa	560.000	356407.343	4611514.472	0.000	692.018	692.018	73.794987	0.000	2.475	0.00	0.00	692.018	691.933	691.933
RECTA Rampa	580.000	356425.672	4611522.474	0.000	692.067	692.067	73.794987	0.000	2.475	0.00	0.00	692.067	692.000	692.000
RECTA Rampa	600.000	356444.001	4611530.476	0.000	692.117	692.117	73.794987	0.000	2.475	0.00	0.00	692.117	691.993	691.993
RECTA Rampa	620.000	356462.331	4611538.478	0.000	692.166	692.166	73.794987	0.000	2.475	0.00	0.00	692.166	692.000	692.000
RECTA Rampa	640.000	356480.660	4611546.480	0.000	692.216	692.216	73.794987	0.000	2.475	0.00	0.00	692.216	691.952	691.952
RECTA KV -11651	660.000	356498.990	4611554.482	0.000	692.265	692.265	73.794987	0.000	2.454	0.00	0.00	692.265	691.967	691.967
CIRC. KV -11651	672.447	356510.397	4611559.463	-300.000	692.289	692.289	73.794987	0.000	1.386	0.00	0.00	692.289	691.950	691.950
CIRC. KV -11651	680.000	356517.280	4611562.571	-300.000	692.297	692.297	72.192250	0.000	0.737	0.00	0.00	692.297	691.939	691.939
CIRC. Pendiente	700.000	356535.107	4611571.630	-300.000	692.299	692.299	67.948118	0.000	-0.100	0.00	0.00	692.299	691.916	691.916
CIRC. Pendiente	720.000	356552.291	4611581.856	-300.000	692.297	692.297	63.703986	0.000	-0.100	0.00	0.00	692.297	691.760	691.760
RECTA Pendiente	738.026	356567.165	4611592.035	0.000	692.295	692.295	59.878688	0.000	-0.100	0.00	0.00	692.295	691.745	691.745
RECTA Pendiente	740.000	356568.759	4611593.198	0.000	692.295	692.295	59.878688	0.000	-0.100	0.00	0.00	692.295	691.743	691.743
RECTA KV 30225	760.000	356584.917	4611604.985	0.000	692.294	692.294	59.878688	0.000	0.081	0.00	0.00	692.294	691.905	691.905
RECTA KV 30225	780.000	356601.075	4611616.771	0.000	692.302	692.302	59.878688	0.000	0.743	0.00	0.00	692.302	691.963	691.963
RECTA Rampa	789.308	356608.595	4611622.257	0.000	692.310	692.310	59.878688	0.000	0.893	0.00	0.00	692.310	691.762	691.762

Istram 20.08.08.26 10/02/21 11:50:58 200009 pagina 1
PROYECTO : ESTUDIO INFORMATIVO DE LA INTEGRACION DEL FFCC EN VALLADOLID
GRUPO : 2 : EJES ANCHO 1668 ALTERNATIVA 2
EJE : 71 : VIA 7 IBERICO

* * * PUNTOS DEL EJE EN PLANTA * * *

TIPO	P.K.	X	Y	RADIO	Z RAS IZ.	Z RAS DR.	AZIMUT	DIST. EJE	PEN(o/oo)	PERAL_I	PERAL_D	HILO BAJO	ZT (eje)	Z TERR.
RECTA Pendiente	0.000	355976.612	4611358.511	0.000	692.060	692.060	89.444913	0.000	-1.519	0.00	0.00	692.060	691.890	691.890
RECTA Pendiente	20.000	355996.338	4611361.812	0.000	692.029	692.029	89.444913	0.000	-1.519	0.00	0.00	692.029	691.986	691.986
RECTA KV 19752	40.000	356016.063	4611365.113	0.000	691.999	691.999	89.444913	0.000	-1.355	0.00	0.00	691.999	691.833	691.833
RECTA KV 19752	60.000	356035.789	4611368.414	0.000	691.982	691.982	89.444913	0.000	-0.342	0.00	0.00	691.982	691.874	691.874
CIRC. Horizontal	67.321	356043.009	4611369.622	-300.000	691.981	691.981	89.444913	0.000	0.000	0.00	0.00	691.981	691.863	691.863
CIRC. Horizontal	80.000	356055.467	4611371.978	-300.000	691.981	691.981	86.754280	0.000	0.000	0.00	0.00	691.981	691.839	691.839
CIRC. Horizontal	100.000	356074.883	4611376.759	-300.000	691.981	691.981	82.510148	0.000	0.000	0.00	0.00	691.981	691.828	691.828
CIRC. KV -27519	120.000	356093.938	4611382.822	-300.000	691.975	691.975	78.266016	0.000	-0.669	0.00	0.00	691.975	691.776	691.776
CIRC. Pendiente	140.000	356112.547	4611390.141	-300.000	691.955	691.955	74.021884	0.000	-1.090	0.00	0.00	691.955	691.780	691.780
RECTA Pendiente	141.069	356113.528	4611390.567	0.000	691.954	691.954	73.794977	0.000	-1.090	0.00	0.00	691.954	691.776	691.776
RECTA Pendiente	160.000	356130.877	4611398.141	0.000	691.934	691.934	73.794977	0.000	-1.090	0.00	0.00	691.934	691.632	691.632
RECTA Pendiente	180.000	356149.207	4611406.143	0.000	691.912	691.912	73.794977	0.000	-1.090	0.00	0.00	691.912	691.493	691.493
RECTA Pendiente	200.000	356167.536	4611414.145	0.000	691.890	691.890	73.794977	0.000	-1.090	0.00	0.00	691.890	691.526	691.526
RECTA Pendiente	220.000	356185.865	4611422.147	0.000	691.868	691.868	73.794977	0.000	-1.090	0.00	0.00	691.868	691.571	691.571
RECTA KV 51294	240.000	356204.195	4611430.149	0.000	691.848	691.848	73.794977	0.000	-0.886	0.00	0.00	691.848	691.617	691.617
RECTA Pendiente	260.000	356222.524	4611438.151	0.000	691.834	691.834	73.794977	0.000	-0.505	0.00	0.00	691.834	691.662	691.662
RECTA Pendiente	280.000	356240.854	4611446.153	0.000	691.824	691.824	73.794977	0.000	-0.505	0.00	0.00	691.824	691.708	691.708
RECTA Pendiente	300.000	356259.183	4611454.155	0.000	691.813	691.813	73.794977	0.000	-0.505	0.00	0.00	691.813	691.753	691.753
RECTA KV 38700	320.000	356277.513	4611462.157	0.000	691.806	691.806	73.794977	0.000	-0.160	0.00	0.00	691.806	691.799	691.799
RECTA KV 38700	340.000	356295.842	4611470.159	0.000	691.808	691.808	73.794977	0.000	0.357	0.00	0.00	691.808	691.845	691.845
RECTA KV 38700	360.000	356314.171	4611478.161	0.000	691.820	691.820	73.794977	0.000	0.874	0.00	0.00	691.820	691.849	691.849
RECTA KV 38700	380.000	356332.501	4611486.163	0.000	691.843	691.843	73.794977	0.000	1.390	0.00	0.00	691.843	691.833	691.833
RECTA KV 38700	400.000	356350.830	4611494.165	0.000	691.876	691.876	73.794977	0.000	1.907	0.00	0.00	691.876	691.831	691.831
RECTA KV 38700	420.000	356369.160	4611502.167	0.000	691.919	691.919	73.794977	0.000	2.424	0.00	0.00	691.919	691.831	691.831
RECTA Rampa	440.000	356387.489	4611510.169	0.000	691.968	691.968	73.794977	0.000	2.475	0.00	0.00	691.968	691.814	691.814
RECTA Rampa	460.000	356405.818	4611518.171	0.000	692.018	692.018	73.794977	0.000	2.475	0.00	0.00	692.018	691.874	691.874
RECTA Rampa	480.000	356424.148	4611526.174	0.000	692.067	692.067	73.794977	0.000	2.475	0.00	0.00	692.067	691.944	691.944
RECTA Rampa	500.000	356442.477	4611534.176	0.000	692.117	692.117	73.794977	0.000	2.475	0.00	0.00	692.117	691.928	691.928
RECTA Rampa	520.000	356460.807	4611542.178	0.000	692.166	692.166	73.794977	0.000	2.475	0.00	0.00	692.166	692.000	692.000
RECTA KV -14637	540.000	356479.136	4611550.180	0.000	692.209	692.209	73.794977	0.000	1.510	0.00	0.00	692.209	692.000	692.000
RECTA Rampa	560.000	356497.466	4611558.182	0.000	692.226	692.226	73.794977	0.000	0.425	0.00	0.00	692.226	692.000	692.000
CIRC. Rampa	571.925	356508.395	4611562.953	-300.000	692.231	692.231	73.794977	0.000	0.425	0.00	0.00	692.231	692.000	692.000
CIRC. Rampa	580.000	356515.751	4611566.283	-300.000	692.235	692.235	72.081445	0.000	0.425	0.00	0.00	692.235	692.000	692.000
CIRC. KV 167659	600.000	356533.562	4611575.372	-300.000	692.243	692.243	67.837313	0.000	0.491	0.00	0.00	692.243	691.929	691.929
CIRC. KV 167659	620.000	356550.728	4611585.628	-300.000	692.254	692.254	63.593181	0.000	0.610	0.00	0.00	692.254	691.791	691.791
RECTA KV 167659	637.504	356565.162	4611595.526	0.000	692.266	692.266	59.878686	0.000	0.714	0.00	0.00	692.266	691.798	691.798
RECTA KV 167659	640.000	356567.178	4611596.996	0.000	692.268	692.268	59.878686	0.000	0.729	0.00	0.00	692.268	691.799	691.799
RECTA KV 167659	660.000	356583.336	4611608.783	0.000	692.284	692.284	59.878686	0.000	0.848	0.00	0.00	692.284	692.000	692.000
RECTA Rampa	680.000	356599.494	4611620.569	0.000	692.302	692.302	59.878686	0.000	0.962	0.00	0.00	692.302	691.940	691.940
RECTA Rampa	700.000	356615.652	4611632.356	0.000	692.321	692.321	59.878686	0.000	0.962	0.00	0.00	692.321	691.936	691.936
RECTA Rampa	720.000	356631.810	4611644.142	0.000	692.340	692.340	59.878686	0.000	0.962	0.00	0.00	692.340	692.003	692.003
RECTA Rampa	722.667	356633.964	4611645.714	0.000	692.343	692.343	59.878686	0.000	0.962	0.00	0.00	692.343	692.014	692.014

Istram 20.08.08.26 10/02/21 11:48:54 200009 pagina 1
PROYECTO : ESTUDIO INFORMATIVO DE LA INTEGRACION DEL FFCC EN VALLADOLID
GRUPO : 2 : EJES ANCHO 1668 ALTERNATIVA 2
EJE : 77 : VIA 1 - VIA 6 IBERICO

* * * PUNTOS DEL EJE EN PLANTA * * *

TIPO	P.K.	X	Y	RADIO	Z RAS IZ.	Z RAS DR.	AZIMUT	DIST. EJE	PEN(o/oo)	PERAL_I	PERAL_D	HILO BAJO	ZT (eje)	Z TERR.
RECTA KV 130000	244217.757	354447.172	4607541.789	0.000	691.848	691.848	20.406167	0.000	-4.600	0.00	0.00	691.848	691.939	691.939
RECTA KV 130000	244220.000	354447.879	4607543.917	0.000	691.838	691.838	20.406167	0.000	-4.583	0.00	0.00	691.838	691.935	691.935
RECTA KV 130000	244240.000	354454.180	4607562.899	0.000	691.748	691.748	20.406167	0.000	-4.429	0.00	0.00	691.748	691.855	691.855
RECTA KV 130000	244260.000	354460.482	4607581.880	0.000	691.661	691.661	20.406167	0.000	-4.275	0.00	0.00	691.661	691.757	691.757
CIRC. KV 130000	244278.920	354466.443	4607599.836	649996.133	691.582	691.582	20.406167	0.000	-4.129	0.00	0.00	691.582	691.662	691.662
CIRC. KV 130000	244280.000	354466.784	4607600.861	649996.133	691.577	691.577	20.406273	0.000	-4.121	0.00	0.00	691.577	691.656	691.656
CIRC. KV 130000	244300.000	354473.085	4607619.842	649996.133	691.496	691.496	20.408231	0.000	-3.967	0.00	0.00	691.496	691.274	691.274
CIRC. KV 130000	244320.000	354479.388	4607638.823	649996.133	691.418	691.418	20.410190	0.000	-3.813	0.00	0.00	691.418	691.485	691.485
CIRC. KV 130000	244340.000	354485.691	4607657.804	649996.133	691.344	691.344	20.412149	0.000	-3.659	0.00	0.00	691.344	691.403	691.403
RECTA KV 130000	244359.874	354491.955	4607676.665	0.000	691.272	691.272	20.414096	0.000	-3.507	0.00	0.00	691.272	691.334	691.334
RECTA KV 130000	244360.000	354491.995	4607676.785	0.000	691.272	691.272	20.414096	0.000	-3.506	0.00	0.00	691.272	691.333	691.333
RECTA KV 130000	244380.000	354498.299	4607695.765	0.000	691.203	691.203	20.414096	0.000	-3.352	0.00	0.00	691.203	691.277	691.277
RECTA KV 130000	244400.000	354504.603	4607714.746	0.000	691.138	691.138	20.414096	0.000	-3.198	0.00	0.00	691.138	691.224	691.224
RECTA KV 130000	244420.000	354510.906	4607733.726	0.000	691.076	691.076	20.414096	0.000	-3.044	0.00	0.00	691.076	691.106	691.106
RECTA KV 130000	244440.000	354517.210	4607752.707	0.000	691.016	691.016	20.414096	0.000	-2.890	0.00	0.00	691.016	691.032	691.032
RECTA KV 130000	244460.000	354523.514	4607771.688	0.000	690.960	690.960	20.414096	0.000	-2.736	0.00	0.00	690.960	690.937	690.937
RECTA KV 130000	244480.000	354529.818	4607790.668	0.000	690.907	690.907	20.414096	0.000	-2.583	0.00	0.00	690.907	690.875	690.875
RECTA KV 130000	244500.000	354536.122	4607809.649	0.000	690.857	690.857	20.414096	0.000	-2.429	0.00	0.00	690.857	690.858	690.858
RECTA KV 130000	244520.000	354542.426	4607828.629	0.000	690.810	690.810	20.414096	0.000	-2.275	0.00	0.00	690.810	690.829	690.829
RECTA KV 130000	244540.000	354548.730	4607847.610	0.000	690.766	690.766	20.414096	0.000	-2.121	0.00	0.00	690.766	690.763	690.763
RECTA KV 130000	244560.000	354555.034	4607866.590	0.000	690.725	690.725	20.414096	0.000	-1.967	0.00	0.00	690.725	690.724	690.724
RECTA KV 130000	244580.000	354561.338	4607885.571	0.000	690.687	690.687	20.414096	0.000	-1.813	0.00	0.00	690.687	690.657	690.657
RECTA KV 130000	244600.000	354567.642	4607904.551	0.000	690.652	690.652	20.414096	0.000	-1.659	0.00	0.00	690.652	690.597	690.597
RECTA KV 130000	244620.000	354573.946	4607923.532	0.000	690.621	690.621	20.414096	0.000	-1.506	0.00	0.00	690.621	690.573	690.573
RECTA KV 130000	244640.000	354580.250	4607942.512	0.000	690.592	690.592	20.414096	0.000	-1.352	0.00	0.00	690.592	690.504	690.504
RECTA KV 130000	244660.000	354586.554	4607961.493	0.000	690.566	690.566	20.414096	0.000	-1.198	0.00	0.00	690.566	690.513	690.513
RECTA KV 130000	244680.000	354592.858	4607980.473	0.000	690.544	690.544	20.414096	0.000	-1.044	0.00	0.00	690.544	690.500	690.500
RECTA KV 130000	244700.000	354599.162	4607999.454	0.000	690.525	690.525	20.414096	0.000	-0.890	0.00	0.00	690.525	690.456	690.456
RECTA KV 130000	244720.000	354605.465	4608018.434	0.000	690.508	690.508	20.414096	0.000	-0.736	0.00	0.00	690.508	690.487	690.487
RECTA Pendiente	244740.000	354611.769	4608037.415	0.000	690.494	690.494	20.414096	0.000	-0.734	0.00	0.00	690.494	690.490	690.490
RECTA Pendiente	244760.000	354618.073	4608056.395	0.000	690.479	690.479	20.414096	0.000	-0.734	0.00	0.00	690.479	690.519	690.519
RECTA Pendiente	244780.000	354624.377	4608075.376	0.000	690.464	690.464	20.414096	0.000	-0.734	0.00	0.00	690.464	690.474	690.474
RECTA Pendiente	244800.000	354630.681	4608094.357	0.000	690.450	690.450	20.414096	0.000	-0.734	0.00	0.00	690.450	690.440	690.440
RECTA Pendiente	244820.000	354636.985	4608113.337	0.000	690.435	690.435	20.414096	0.000	-0.734	0.00	0.00	690.435	690.440	690.440
RECTA Pendiente	244840.000	354643.289	4608132.318	0.000	690.420	690.420	20.414096	0.000	-0.734	0.00	0.00	690.420	690.428	690.428
RECTA Pendiente	244860.000	354649.593	4608151.298	0.000	690.406	690.406	20.414096	0.000	-0.734	0.00	0.00	690.406	690.415	690.415
RECTA Pendiente	244880.000	354655.897	4608170.279	0.000	690.391	690.391	20.414096	0.000	-0.734	0.00	0.00	690.391	690.401	690.401
CIRC. Pendiente	244883.462	354656.988	4608173.564	-330003.867	690.388	690.388	20.414096	0.000	-0.734	0.00	0.00	690.388	690.401	690.401
CIRC. Pendiente	244900.000	354662.200	4608189.259	-330003.867	690.376	690.376	20.410905	0.000	-0.734	0.00	0.00	690.376	690.399	690.399
CIRC. Pendiente	244920.000	354668.503	4608208.240	-330003.867	690.362	690.362	20.407047	0.000	-0.734	0.00	0.00	690.362	690.399	690.399
CIRC. Pendiente	244940.000	354674.804	4608227.222	-330003.867	690.347	690.347	20.403189	0.000	-0.734	0.00	0.00	690.347	690.399	690.399
CIRC. Pendiente	244960.000	354681.104	4608246.204	-330003.867	690.332	690.332	20.399330	0.000	-0.734	0.00	0.00	690.332	690.390	690.390
CIRC. Pendiente	244967.248	354683.387	4608253.083	499996.133	690.327	690.327	20.397932	0.000	-0.734	0.00	0.00	690.327	690.382	690.382
CIRC. Pendiente	244980.000	354687.404	4608265.186	499996.133	690.318	690.318	20.399556	0.000	-0.734	0.00	0.00	690.318	690.368	690.368
CIRC. Pendiente	245000.000	354693.704	4608284.167	499996.133	690.303	690.303	20.402102	0.000	-0.734	0.00	0.00	690.303	690.320	690.320
CIRC. Pendiente	245020.000	354700.004	4608303.149	499996.133	690.288	690.288	20.404649	0.000	-0.734	0.00	0.00	690.288	690.346	690.346
CIRC. Pendiente	245040.000	354706.306	4608322.130	499996.133	690.274	690.274	20.407195	0.000	-0.734	0.00	0.00	690.274	690.367	690.367
CIRC. Pendiente	245060.000	354712.608	4608341.111	499996.133	690.259	690.259	20.409742	0.000	-0.734	0.00	0.00	690.259	690.299	690.299
CIRC. Pendiente	245080.000	354718.911	4608360.092	499996.133	690.244	690.244	20.412288	0.000	-0.734	0.00	0.00	690.244	690.280	690.280
CIRC. Pendiente	245100.000	354725.215	4608379.073	499996.133	690.230	690.230	20.414835	0.000	-0.734	0.00	0.00	690.230	690.290	690.290

Istram 20.08.08.26 10/02/21 11:48:55 200009 pagina 2
PROYECTO : ESTUDIO INFORMATIVO DE LA INTEGRACION DEL FFCC EN VALLADOLID
GRUPO : 2 : EJES ANCHO 1668 ALTERNATIVA 2
EJE : 77 : VIA 1 - VIA 6 IBERICO

* * * PUNTOS DEL EJE EN PLANTA * * *

TIPO	P.K.	X	Y	RADIO	Z RAS IZ.	Z RAS DR.	AZIMUT	DIST. EJE	PEN(o/oo)	PERAL_I	PERAL_D	HILO BAJO	ZT (eje)	Z TERR.
RECTA Pendiente	245110.864	354728.639	4608389.383	0.000	690.222	690.222	20.416218	0.000	-0.734	0.00	0.00	690.222	690.282	690.282
RECTA Pendiente	245120.000	354731.519	4608398.053	0.000	690.215	690.215	20.416218	0.000	-0.734	0.00	0.00	690.215	690.274	690.274
RECTA Pendiente	245140.000	354737.824	4608417.034	0.000	690.200	690.200	20.416218	0.000	-0.734	0.00	0.00	690.200	690.222	690.222
RECTA Pendiente	245160.000	354744.128	4608436.014	0.000	690.185	690.185	20.416218	0.000	-0.734	0.00	0.00	690.185	690.183	690.183
RECTA Pendiente	245180.000	354750.433	4608454.994	0.000	690.171	690.171	20.416218	0.000	-0.734	0.00	0.00	690.171	690.124	690.124
RECTA Pendiente	245200.000	354756.738	4608473.974	0.000	690.156	690.156	20.416218	0.000	-0.734	0.00	0.00	690.156	690.085	690.085
RECTA Pendiente	245220.000	354763.042	4608492.955	0.000	690.141	690.141	20.416218	0.000	-0.734	0.00	0.00	690.141	690.113	690.113
RECTA Pendiente	245240.000	354769.347	4608511.935	0.000	690.127	690.127	20.416218	0.000	-0.734	0.00	0.00	690.127	690.125	690.125
RECTA Pendiente	245260.000	354775.651	4608530.915	0.000	690.112	690.112	20.416218	0.000	-0.734	0.00	0.00	690.112	690.049	690.049
RECTA Pendiente	245280.000	354781.956	4608549.896	0.000	690.097	690.097	20.416218	0.000	-0.734	0.00	0.00	690.097	690.010	690.010
RECTA Pendiente	245300.000	354788.260	4608568.876	0.000	690.083	690.083	20.416218	0.000	-0.734	0.00	0.00	690.083	690.047	690.047
RECTA Pendiente	245320.000	354794.565	4608587.856	0.000	690.068	690.068	20.416218	0.000	-0.734	0.00	0.00	690.068	690.053	690.053
RECTA Pendiente	245340.000	354800.870	4608606.837	0.000	690.053	690.053	20.416218	0.000	-0.734	0.00	0.00	690.053	690.034	690.034
RECTA Pendiente	245360.000	354807.174	4608625.817	0.000	690.039	690.039	20.416218	0.000	-0.734	0.00	0.00	690.039	689.974	689.974
RECTA Pendiente	245380.000	354813.479	4608644.797	0.000	690.024	690.024	20.416218	0.000	-0.734	0.00	0.00	690.024	689.909	689.909
RECTA Pendiente	245400.000	354819.783	4608663.778	0.000	690.009	690.009	20.416218	0.000	-0.734	0.00	0.00	690.009	689.913	689.913
CIRC. Pendiente	245406.096	354821.705	4608669.563	-500003.867	690.005	690.005	20.416218	0.000	-0.734	0.00	0.00	690.005	689.924	689.924
CIRC. Pendiente	245420.000	354826.088	4608682.758	-500003.867	689.995	689.995	20.414448	0.000	-0.734	0.00	0.00	689.995	689.950	689.950
CIRC. Pendiente	245440.000	354832.391	4608701.739	-500003.867	689.980	689.980	20.411901	0.000	-0.734	0.00	0.00	689.980	689.950	689.950
CIRC. Pendiente	245460.000	354838.694	4608720.720	-500003.867	689.965	689.965	20.409355	0.000	-0.734	0.00	0.00	689.965	689.923	689.923
CIRC. Pendiente	245480.000	354844.996	4608739.701	-500003.867	689.951	689.951	20.406808	0.000	-0.734	0.00	0.00	689.951	689.866	689.866
CIRC. Pendiente	245500.000	354851.298	4608758.682	-500003.867	689.936	689.936	20.404262	0.000	-0.734	0.00	0.00	689.936	689.932	689.932
CIRC. Pendiente	245520.000	354857.598	4608777.664	-500003.867	689.921	689.921	20.401715	0.000	-0.734	0.00	0.00	689.921	689.898	689.898
CIRC. Pendiente	245540.000	354863.898	4608796.646	-500003.867	689.907	689.907	20.399169	0.000	-0.734	0.00	0.00	689.907	689.875	689.875
CIRC. Pendiente	245560.000	354870.197	4608815.628	-500003.867	689.892	689.892	20.396622	0.000	-0.734	0.00	0.00	689.892	689.876	689.876
RECTA Pendiente	245564.592	354871.644	4608819.986	0.000	689.888	689.888	20.396038	0.000	-0.734	0.00	0.00	689.888	689.875	689.875
RECTA Pendiente	245580.000	354876.496	4608834.610	0.000	689.877	689.877	20.396038	0.000	-0.734	0.00	0.00	689.877	689.871	689.871
RECTA Pendiente	245600.000	354882.794	4608853.592	0.000	689.862	689.862	20.396038	0.000	-0.734	0.00	0.00	689.862	689.844	689.844
RECTA Pendiente	245620.000	354889.093	4608872.575	0.000	689.848	689.848	20.396038	0.000	-0.734	0.00	0.00	689.848	689.793	689.793
RECTA KV 247395	245640.000	354895.391	4608891.557	0.000	689.833	689.833	20.396038	0.000	-0.726	0.00	0.00	689.833	689.797	689.797
RECTA KV 247395	245660.000	354901.690	4608910.539	0.000	689.819	689.819	20.396038	0.000	-0.645	0.00	0.00	689.819	689.857	689.857
RECTA KV 247395	245680.000	354907.989	4608929.522	0.000	689.807	689.807	20.396038	0.000	-0.564	0.00	0.00	689.807	689.831	689.831
RECTA KV 247395	245700.000	354914.287	4608948.504	0.000	689.797	689.797	20.396038	0.000	-0.483	0.00	0.00	689.797	689.797	689.797
RECTA KV 247395	245720.000	354920.586	4608967.486	0.000	689.788	689.788	20.396038	0.000	-0.402	0.00	0.00	689.788	689.770	689.770
RECTA KV 247395	245740.000	354926.884	4608986.468	0.000	689.781	689.781	20.396038	0.000	-0.321	0.00	0.00	689.781	689.803	689.803
RECTA KV 247395	245760.000	354933.183	4609005.451	0.000	689.775	689.775	20.396038	0.000	-0.241	0.00	0.00	689.775	689.846	689.846
RECTA KV 247395	245780.000	354939.481	4609024.433	0.000	689.771	689.771	20.396038	0.000	-0.160	0.00	0.00	689.771	689.827	689.827
RECTA KV 247395	245800.000	354945.780	4609043.415	0.000	689.769	689.769	20.396038	0.000	-0.079	0.00	0.00	689.769	689.851	689.851
RECTA KV 247395	245820.000	354952.078	4609062.398	0.000	689.768	689.768	20.396038	0.000	0.002	0.00	0.00	689.768	689.890	689.890
RECTA KV 247395	245840.000	354958.377	4609081.380	0.000	689.769	689.769	20.396038	0.000	0.083	0.00	0.00	689.769	689.817	689.817
RECTA Rampa	245860.000	354964.676	4609100.362	0.000	689.771	689.771	20.396038	0.000	0.088	0.00	0.00	689.771	689.842	689.842
RECTA Rampa	245880.000	354970.974	4609119.345	0.000	689.772	689.772	20.396038	0.000	0.088	0.00	0.00	689.772	689.807	689.807
RECTA Rampa	245900.000	354977.273	4609138.327	0.000	689.774	689.774	20.396038	0.000	0.088	0.00	0.00	689.774	689.828	689.828
RECTA Rampa	245920.000	354983.571	4609157.309	0.000	689.776	689.776	20.396038	0.000	0.088	0.00	0.00	689.776	689.799	689.799
RECTA Rampa	245940.000	354989.870	4609176.292	0.000	689.778	689.778	20.396038	0.000	0.088	0.00	0.00	689.778	689.817	689.817
CIRC. Rampa	245940.832	354990.132	4609177.081	-150003.867	689.778	689.778	20.396038	0.000	0.088	0.00	0.00	689.778	689.818	689.818
CIRC. Rampa	245960.000	354996.167	4609195.274	-150003.867	689.779	689.779	20.387903	0.000	0.088	0.00	0.00	689.779	689.835	689.835
CIRC. Rampa	245980.000	355002.462	4609214.258	-150003.867	689.781	689.781	20.379415	0.000	0.088	0.00	0.00	689.781	689.798	689.798
CIRC. Rampa	246000.000	355008.754	4609233.242	-150003.867	689.783	689.783	20.370927	0.000	0.088	0.00	0.00	689.783	689.780	689.780
CIRC. Rampa	246020.000	355015.044	4609252.227	-150003.867	689.785	689.785	20.362438	0.000	0.088	0.00	0.00	689.785	689.780	689.780

Istram 20.08.08.26 10/02/21 11:48:55 200009 pagina 3

PROYECTO : ESTUDIO INFORMATIVO DE LA INTEGRACION DEL FFCC EN VALLADOLID
GRUPO : 2 : EJES ANCHO 1668 ALTERNATIVA 2
EJE : 77 : VIA 1 - VIA 6 IBERICO

* * * PUNTOS DEL EJE EN PLANTA * * *

TIPO	P.K.	X	Y	RADIO	Z RAS IZ.	Z RAS DR.	AZIMUT	DIST. EJE	PEN(o/oo)	PERAL_I	PERAL_D	HILO BAJO	ZT (eje)	Z TERR.
CIRC. Rampa	246030.631	355018.387	4609262.320	149996.133	689.786	689.786	20.357926	0.000	0.088	0.00	0.00	689.786	689.780	689.780
CIRC. Rampa	246040.000	355021.332	4609271.213	149996.133	689.786	689.786	20.361903	0.000	0.088	0.00	0.00	689.786	689.780	689.780
CIRC. Rampa	246060.000	355027.622	4609290.199	149996.133	689.788	689.788	20.370391	0.000	0.088	0.00	0.00	689.788	689.787	689.787
CIRC. Rampa	246080.000	355033.914	4609309.183	149996.133	689.790	689.790	20.378880	0.000	0.088	0.00	0.00	689.790	689.810	689.810
CIRC. Rampa	246100.000	355040.208	4609328.167	149996.133	689.792	689.792	20.387368	0.000	0.088	0.00	0.00	689.792	689.821	689.821
CIRC. Rampa	246120.000	355046.506	4609347.149	149996.133	689.793	689.793	20.395857	0.000	0.088	0.00	0.00	689.793	689.821	689.821
RECTA Rampa	246125.666	355048.290	4609352.527	0.000	689.794	689.794	20.398261	0.000	0.088	0.00	0.00	689.794	689.828	689.828
RECTA Rampa	246140.000	355052.805	4609366.131	0.000	689.795	689.795	20.398261	0.000	0.088	0.00	0.00	689.795	689.847	689.847
RECTA Rampa	246160.000	355059.104	4609385.114	0.000	689.797	689.797	20.398261	0.000	0.088	0.00	0.00	689.797	689.809	689.809
RECTA Rampa	246180.000	355065.403	4609404.096	0.000	689.799	689.799	20.398261	0.000	0.088	0.00	0.00	689.799	689.784	689.784
RECTA Rampa	246200.000	355071.702	4609423.078	0.000	689.800	689.800	20.398261	0.000	0.088	0.00	0.00	689.800	689.709	689.709
RECTA Rampa	246220.000	355078.002	4609442.060	0.000	689.802	689.802	20.398261	0.000	0.088	0.00	0.00	689.802	689.748	689.748
RECTA Rampa	246240.000	355084.301	4609461.042	0.000	689.804	689.804	20.398261	0.000	0.088	0.00	0.00	689.804	689.780	689.780
RECTA Rampa	246260.000	355090.600	4609480.024	0.000	689.806	689.806	20.398261	0.000	0.088	0.00	0.00	689.806	689.780	689.780
RECTA Rampa	246280.000	355096.899	4609499.006	0.000	689.807	689.807	20.398261	0.000	0.088	0.00	0.00	689.807	689.780	689.780
RECTA Rampa	246300.000	355103.198	4609517.988	0.000	689.809	689.809	20.398261	0.000	0.088	0.00	0.00	689.809	689.780	689.780
RECTA Rampa	246320.000	355109.498	4609536.970	0.000	689.811	689.811	20.398261	0.000	0.088	0.00	0.00	689.811	689.741	689.741
RECTA Rampa	246340.000	355115.797	4609555.952	0.000	689.813	689.813	20.398261	0.000	0.088	0.00	0.00	689.813	689.732	689.732
RECTA Rampa	246360.000	355122.096	4609574.935	0.000	689.814	689.814	20.398261	0.000	0.088	0.00	0.00	689.814	689.624	689.624
RECTA Rampa	246380.000	355128.395	4609593.917	0.000	689.816	689.816	20.398261	0.000	0.088	0.00	0.00	689.816	689.546	689.546
RECTA Rampa	246400.000	355134.694	4609612.899	0.000	689.818	689.818	20.398261	0.000	0.088	0.00	0.00	689.818	689.522	689.522
RECTA Rampa	246420.000	355140.994	4609631.881	0.000	689.820	689.820	20.398261	0.000	0.088	0.00	0.00	689.820	689.591	689.591
RECTA Rampa	246440.000	355147.293	4609650.863	0.000	689.821	689.821	20.398261	0.000	0.088	0.00	0.00	689.821	689.652	689.652
RECTA KV 227008	246460.000	355153.592	4609669.845	0.000	689.823	689.823	20.398261	0.000	0.098	0.00	0.00	689.823	689.657	689.657
RECTA KV 227008	246480.000	355159.891	4609688.827	0.000	689.826	689.826	20.398261	0.000	0.186	0.00	0.00	689.826	689.628	689.628
RECTA KV 227008	246500.000	355166.191	4609707.809	0.000	689.831	689.831	20.398261	0.000	0.274	0.00	0.00	689.831	689.608	689.608
RECTA KV 227008	246520.000	355172.490	4609726.791	0.000	689.837	689.837	20.398261	0.000	0.363	0.00	0.00	689.837	689.627	689.627
RECTA KV 227008	246540.000	355178.789	4609745.773	0.000	689.845	689.845	20.398261	0.000	0.451	0.00	0.00	689.845	689.648	689.648
RECTA KV 227008	246560.000	355185.088	4609764.755	0.000	689.855	689.855	20.398261	0.000	0.539	0.00	0.00	689.855	689.671	689.671
RECTA KV 227008	246580.000	355191.387	4609783.738	0.000	689.867	689.867	20.398261	0.000	0.627	0.00	0.00	689.867	689.687	689.687
RECTA KV 227008	246600.000	355197.687	4609802.720	0.000	689.880	689.880	20.398261	0.000	0.715	0.00	0.00	689.880	689.693	689.693
RECTA Rampa	246620.000	355203.986	4609821.702	0.000	689.895	689.895	20.398261	0.000	0.792	0.00	0.00	689.895	689.767	689.767
RECTA Rampa	246640.000	355210.285	4609840.684	0.000	689.911	689.911	20.398261	0.000	0.792	0.00	0.00	689.911	689.822	689.822
RECTA Rampa	246660.000	355216.584	4609859.666	0.000	689.927	689.927	20.398261	0.000	0.792	0.00	0.00	689.927	689.802	689.802
RECTA Rampa	246680.000	355222.883	4609878.648	0.000	689.943	689.943	20.398261	0.000	0.792	0.00	0.00	689.943	689.797	689.797
RECTA Rampa	246700.000	355229.183	4609897.630	0.000	689.959	689.959	20.398261	0.000	0.792	0.00	0.00	689.959	689.797	689.797
RECTA Rampa	246720.000	355235.482	4609916.612	0.000	689.975	689.975	20.398261	0.000	0.792	0.00	0.00	689.975	689.814	689.814
RECTA Rampa	246740.000	355241.781	4609935.594	0.000	689.990	689.990	20.398261	0.000	0.792	0.00	0.00	689.990	689.830	689.830
CIRC. Rampa	246742.053	355242.428	4609937.543	-300003.867	689.992	689.992	20.398261	0.000	0.792	0.00	0.00	689.992	689.829	689.829
CIRC. Rampa	246760.000	355248.080	4609954.577	-300003.867	690.006	690.006	20.394453	0.000	0.792	0.00	0.00	690.006	689.821	689.821
CIRC. Rampa	246780.000	355254.377	4609973.559	-300003.867	690.022	690.022	20.390209	0.000	0.792	0.00	0.00	690.022	689.827	689.827
CIRC. Rampa	246800.000	355260.673	4609992.542	-300003.867	690.038	690.038	20.385965	0.000	0.792	0.00	0.00	690.038	689.855	689.855
CIRC. Rampa	246820.000	355266.968	4610011.526	-300003.867	690.054	690.054	20.381721	0.000	0.792	0.00	0.00	690.054	689.912	689.912
CIRC. Rampa	246820.741	355267.202	4610012.230	369996.133	690.054	690.054	20.381563	0.000	0.792	0.00	0.00	690.054	690.170	690.170
CIRC. Rampa	246840.000	355273.263	4610030.510	369996.133	690.070	690.070	20.384877	0.000	0.792	0.00	0.00	690.070	696.860	696.860
CIRC. Rampa	246860.000	355279.559	4610049.493	369996.133	690.085	690.085	20.388318	0.000	0.792	0.00	0.00	690.085	690.025	690.025
RECTA Rampa	246876.139	355284.640	4610064.811	0.000	690.098	690.098	20.391095	0.000	0.792	0.00	0.00	690.098	689.964	689.964
RECTA Rampa	246880.000	355285.856	4610068.476	0.000	690.101	690.101	20.391095	0.000	0.792	0.00	0.00	690.101	689.949	689.949
RECTA Rampa	246900.000	355292.153	4610087.458	0.000	690.117	690.117	20.391095	0.000	0.792	0.00	0.00	690.117	689.920	689.920
RECTA Rampa	246920.000	355298.450	4610106.441	0.000	690.133	690.133	20.391095	0.000	0.792	0.00	0.00	690.133	689.975	689.975

Istram 20.08.08.26 10/02/21 11:48:55 200009 pagina 4

PROYECTO : ESTUDIO INFORMATIVO DE LA INTEGRACION DEL FFCC EN VALLADOLID
GRUPO : 2 : EJES ANCHO 1668 ALTERNATIVA 2
EJE : 77 : VIA 1 - VIA 6 IBERICO

* * * PUNTOS DEL EJE EN PLANTA * * *

TIPO	P.K.	X	Y	RADIO	Z RAS IZ.	Z RAS DR.	AZIMUT	DIST. EJE	PEN(o/oo)	PERAL_I	PERAL_D	HILO BAJO	ZT (eje)	Z TERR.
RECTA Rampa	246940.000	355304.747	4610125.424	0.000	690.149	690.149	20.391095	0.000	0.792	0.00	0.00	690.149	689.963	689.963
RECTA Rampa	246960.000	355311.044	4610144.407	0.000	690.165	690.165	20.391095	0.000	0.792	0.00	0.00	690.165	689.985	689.985
RECTA Rampa	246980.000	355317.341	4610163.390	0.000	690.180	690.180	20.391095	0.000	0.792	0.00	0.00	690.180	690.025	690.025
RECTA Rampa	247000.000	355323.638	4610182.372	0.000	690.196	690.196	20.391095	0.000	0.792	0.00	0.00	690.196	690.061	690.061
RECTA Rampa	247020.000	355329.935	4610201.355	0.000	690.212	690.212	20.391095	0.000	0.792	0.00	0.00	690.212	690.127	690.127
RECTA Rampa	247040.000	355336.232	4610220.338	0.000	690.228	690.228	20.391095	0.000	0.792	0.00	0.00	690.228	690.118	690.118
RECTA Rampa	247060.000	355342.529	4610239.321	0.000	690.244	690.244	20.391095	0.000	0.792	0.00	0.00	690.244	690.122	690.122
RECTA Rampa	247080.000	355348.826	4610258.304	0.000	690.260	690.260	20.391095	0.000	0.792	0.00	0.00	690.260	690.159	690.159
RECTA Rampa	247100.000	355355.123	4610277.287	0.000	690.276	690.276	20.391095	0.000	0.792	0.00	0.00	690.276	690.195	690.195
RECTA Rampa	247120.000	355361.420	4610296.269	0.000	690.291	690.291	20.391095	0.000	0.792	0.00	0.00	690.291	690.218	690.218
RECTA Rampa	247140.000	355367.718	4610315.252	0.000	690.307	690.307	20.391095	0.000	0.792	0.00	0.00	690.307	690.182	690.182
RECTA Rampa	247160.000	355374.015	4610334.235	0.000	690.323	690.323	20.391095	0.000	0.792	0.00	0.00	690.323	690.074	690.074
RECTA Rampa	247180.000	355380.312	4610353.218	0.000	690.339	690.339	20.391095	0.000	0.792	0.00	0.00	690.339	690.067	690.067
RECTA Rampa	247200.000	355386.609	4610372.201	0.000	690.355	690.355	20.391095	0.000	0.792	0.00	0.00	690.355	690.086	690.086
RECTA Rampa	247220.000	355392.906	4610391.183	0.000	690.371	690.371	20.391095	0.000	0.792	0.00	0.00	690.371	690.110	690.110
RECTA Rampa	247240.000	355399.203	4610410.166	0.000	690.386	690.386	20.391095	0.000	0.792	0.00	0.00	690.386	690.141	690.141
RECTA Rampa	247260.000	355405.500	4610429.149	0.000	690.402	690.402	20.391095	0.000	0.792	0.00	0.00	690.402	690.173	690.173
RECTA Rampa	247280.000	355411.797	4610448.132	0.000	690.418	690.418	20.391095	0.000	0.792	0.00	0.00	690.418	690.310	690.310
RECTA Rampa	247300.000	355418.094	4610467.115	0.000	690.434	690.434	20.391095	0.000	0.792	0.00	0.00	690.434	690.334	690.334
CIRC. Rampa	247302.200	355418.787	4610469.203	99996.133	690.436	690.436	20.391095	0.000	0.792	0.00	0.00	690.436	690.331	690.331
CIRC. Rampa	247320.000	355424.393	4610486.097	99996.133	690.450	690.450	20.402427	0.000	0.792	0.00	0.00	690.450	690.305	690.305
CIRC. Rampa	247340.000	355430.695	4610505.078	99996.133	690.466	690.466	20.415160	0.000	0.792	0.00	0.00	690.466	690.354	690.354
CIRC. Rampa	247360.000	355437.001	4610524.058	99996.133	690.482	690.482	20.427893	0.000	0.792	0.00	0.00	690.482	690.403	690.403
CIRC. Rampa	247380.000	355443.311	4610543.036	99996.133	690.497	690.497	20.440626	0.000	0.792	0.00	0.00	690.497	690.416	690.416
CIRC. Rampa	247384.242	355444.650	4610547.062	-100003.867	690.501	690.501	20.443327	0.000	0.792	0.00	0.00	690.501	690.422	690.422
CIRC. Rampa	247400.000	355449.623	4610562.014	-100003.867	690.513	690.513	20.433296	0.000	0.792	0.00	0.00	690.513	690.445	690.445
CIRC. Rampa	247420.000	355455.930	4610580.994	-100003.867	690.529	690.529	20.420564	0.000	0.792	0.00	0.00	690.529	690.460	690.460
CIRC. Rampa	247440.000	355462.234	4610599.974	-100003.867	690.545	690.545	20.407832	0.000	0.792	0.00	0.00	690.545	690.355	690.355
CIRC. Rampa	247460.000	355468.534	4610618.956	-100003.867	690.561	690.561	20.395100	0.000	0.792	0.00	0.00	690.561	690.365	690.365
RECTA Rampa	247468.960	355471.356	4610627.460	0.000	690.568	690.568	20.389396	0.000	0.792	0.00	0.00	690.568	690.370	690.370
RECTA Rampa	247480.000	355474.831	4610637.939	0.000	690.577	690.577	20.389396	0.000	0.792	0.00	0.00	690.577	690.376	690.376
RECTA Rampa	247500.000	355481.128	4610656.922	0.000	690.592	690.592	20.389396	0.000	0.792	0.00	0.00	690.592	690.388	690.388
RECTA Rampa	247520.000	355487.424	4610675.905	0.000	690.608	690.608	20.389396	0.000	0.792	0.00	0.00	690.608	690.417	690.417
RECTA Rampa	247540.000	355493.721	4610694.888	0.000	690.624	690.624	20.389396	0.000	0.792	0.00	0.00	690.624	690.443	690.443
CIRC. Rampa	247552.302	355497.594	4610706.564	-40003.867	690.634	690.634	20.389396	0.000	0.792	0.00	0.00	690.634	690.471	690.471
CIRC. Rampa	247560.000	355500.017	4610713.871	-40003.867	690.640	690.640	20.377146	0.000	0.792	0.00	0.00	690.640	690.489	690.489
CIRC. Rampa	247580.000	355506.305	4610732.857	-40003.867	690.656	690.656	20.345318	0.000	0.792	0.00	0.00	690.656	690.513	690.513
CIRC. Rampa	247600.000	355512.584	4610751.845	-40003.867	690.672	690.672	20.313490	0.000	0.792	0.00	0.00	690.672	690.606	690.606
CIRC. Rampa	247605.839	355514.415	4610757.390	39996.133	690.676	690.676	20.304197	0.000	0.792	0.00	0.00	690.676	690.572	690.572
CIRC. Rampa	247620.000	355518.858	4610770.836	39996.133	690.687	690.687	20.326737	0.000	0.792	0.00	0.00	690.687	690.492	690.492
CIRC. KV 21470	247640.000	355525.140	4610789.824	39996.133	690.707	690.707	20.358571	0.000	1.353	0.00	0.00	690.707	690.513	690.513
CIRC. KV 21470	247660.000	355531.432	4610808.808	39996.133	690.743	690.743	20.390405	0.000	2.284	0.00	0.00	690.743	690.595	690.595
RECTA KV 21470	247667.700	355533.858	4610816.117	0.000	690.762	690.762	20.402662	0.000	2.643	0.00	0.00	690.762	690.639	690.639
RECTA KV 21470	247680.000	355537.732	4610827.790	0.000	690.798	690.798	20.402662	0.000	3.216	0.00	0.00	690.798	690.709	690.709
RECTA Rampa	247700.000	355544.033	4610846.771	0.000	690.868	690.868	20.402662	0.000	3.523	0.00	0.00	690.868	690.814	690.814
RECTA Rampa	247720.000	355550.333	4610865.753	0.000	690.938	690.938	20.402662	0.000	3.523	0.00	0.00	690.938	690.941	690.941
RECTA Rampa	247740.000	355556.634	4610884.735	0.000	691.008	691.008	20.402662	0.000	3.523	0.00	0.00	691.008	690.960	690.960
RECTA KV 156221	247760.000	355562.934	4610903.716	0.000	691.079	691.079	20.402662	0.000	3.610	0.00	0.00	691.079	691.064	691.064
RECTA Rampa	247780.000	355569.235	4610922.698	0.000	691.153	691.153	20.402662	0.000	3.705	0.00	0.00	691.153	691.110	691.110
RECTA Rampa	247800.000	355575.535	4610941.680	0.000	691.227	691.227	20.402662	0.000	3.705	0.00	0.00	691.227	691.170	691.170

Istram 20.08.08.26 10/02/21 11:48:55 200009 pagina 5

PROYECTO : ESTUDIO INFORMATIVO DE LA INTEGRACION DEL FFCC EN VALLADOLID
GRUPO : 2 : EJES ANCHO 1668 ALTERNATIVA 2
EJE : 77 : VIA 1 - VIA 6 IBERICO

* * * PUNTOS DEL EJE EN PLANTA * * *

TIPO	P.K.	X	Y	RADIO	Z RAS IZ.	Z RAS DR.	AZIMUT	DIST. EJE	PEN(o/oo)	PERAL_I	PERAL_D	HILO BAJO	ZT (eje)	Z TERR.
RECTA Rampa	247820.000	355581.836	4610960.661	0.000	691.301	691.301	20.402662	0.000	3.705	0.00	0.00	691.301	691.185	691.185
CLOT. Rampa	247830.622	355585.182	4610970.742	1000000.000	691.340	691.340	20.402662	0.000	3.705	0.00	0.00	691.340	691.217	691.217
CLOT. Rampa	247840.000	355588.138	4610979.643	7617.678	691.375	691.375	20.441850	0.000	3.705	1.27	0.00	691.375	691.244	691.244
CLOT. Rampa	247860.000	355594.493	4610998.606	2431.771	691.449	691.449	20.787214	0.000	3.705	3.97	0.00	691.449	691.326	691.326
CLOT. Rampa	247880.000	355601.004	4611017.517	1446.817	691.523	691.523	21.489021	0.000	3.705	6.68	0.00	691.523	691.408	691.408
CLOT. Rampa	247900.000	355607.775	4611036.335	1029.737	691.597	691.597	22.547270	0.000	3.705	9.38	0.00	691.597	691.503	691.503
CLOT. Rampa	247920.000	355614.910	4611055.019	799.315	691.672	691.672	23.961961	0.000	3.705	12.09	0.00	691.672	691.573	691.573
CLOT. Rampa	247940.000	355622.511	4611073.517	653.159	691.746	691.746	25.733095	0.000	3.705	14.79	0.00	691.746	691.635	691.635
CLOT. Rampa	247960.000	355630.674	4611091.775	552.190	691.820	691.820	27.860672	0.000	3.705	17.49	0.00	691.820	691.692	691.692
CIRC. Rampa	247978.534	355638.822	4611108.420	483.000	691.888	691.888	30.150459	0.000	3.705	20.00	0.00	691.888	691.736	691.736
CIRC. Rampa	247980.000	355639.493	4611109.724	483.000	691.894	691.894	30.343733	0.000	3.705	20.00	0.00	691.894	691.739	691.739
CIRC. Rampa	248000.000	355649.034	4611127.300	483.000	691.968	691.968	32.979840	0.000	3.705	20.00	0.00	691.968	691.860	691.860
CIRC. KV -35744	248020.000	355659.294	4611144.466	483.000	692.037	692.037	35.615946	0.000	3.160	20.00	0.00	692.037	691.926	691.926
CIRC. KV -35744	248040.000	355670.257	4611161.192	483.000	692.094	692.094	38.252053	0.000	2.600	20.00	0.00	692.094	691.875	691.875
CIRC. KV -35744	248060.000	355681.902	4611177.450	483.000	692.141	692.141	40.888160	0.000	2.040	20.00	0.00	692.141	691.921	691.921
CIRC. KV -35744	248080.000	355694.211	4611193.212	483.000	692.176	692.176	43.524266	0.000	1.481	20.00	0.00	692.176	691.937	691.937
CIRC. KV -35744	248100.000	355707.161	4611208.451	483.000	692.200	692.200	46.160373	0.000	0.921	20.00	0.00	692.200	691.991	691.991
CIRC. KV -35744	248120.000	355720.731	4611223.141	483.000	692.213	692.213	48.796480	0.000	0.362	20.00	0.00	692.213	692.024	692.024
CIRC. KV -35744	248140.000	355734.897	4611237.257	483.000	692.214	692.214	51.432587	0.000	-0.198	20.00	0.00	692.214	692.089	692.089
CIRC. Pendiente	248160.000	355749.636	4611250.774	483.000	692.206	692.206	54.068693	0.000	-0.480	20.00	0.00	692.206	692.040	692.040
CIRC. Pendiente	248180.000	355764.922	4611263.670	483.000	692.197	692.197	56.704800	0.000	-0.480	20.00	0.00	692.197	692.068	692.068
CLOT. Pendiente	248193.273	355775.356	4611271.874	483.000	692.190	692.190	58.454285	0.000	-0.480	20.00	0.00	692.190	692.147	692.147
CLOT. KV 46104	248200.000	355780.729	4611275.920	456.763	692.187	692.187	59.366371	0.000	-0.375	23.36	0.00	692.187	692.187	692.187
CIRC. KV 46104	248203.273	355783.365	4611277.861	445.000	692.186	692.186	59.828615	0.000	-0.304	25.00	0.00	692.186	692.173	692.173
CIRC. KV 46104	248220.000	355797.053	4611287.473	445.000	692.184	692.184	62.221554	0.000	0.059	25.00	0.00	692.184	692.102	692.102
CIRC. Rampa	248240.000	355813.879	4611298.281	445.000	692.190	692.190	65.082767	0.000	0.435	25.00	0.00	692.190	692.180	692.180
CIRC. Rampa	248260.000	355831.174	4611308.322	445.000	692.198	692.198	67.943979	0.000	0.435	25.00	0.00	692.198	698.717	698.717
CIRC. Rampa	248280.000	355848.902	4611317.575	445.000	692.207	692.207	70.805192	0.000	0.435	25.00	0.00	692.207	692.066	692.066
CIRC. KV -25668	248300.000	355867.029	4611326.023	445.000	692.211	692.211	73.666404	0.000	-0.189	25.00	0.00	692.211	692.026	692.026
CLOT. KV -25668	248311.047	355877.198	4611330.338	445.000	692.206	692.206	75.246803	0.000	-0.619	25.00	0.00	692.206	692.016	692.016
CLOT. KV -25668	248320.000	355885.516	4611333.649	463.249	692.199	692.199	76.502389	0.000	-0.968	16.05	0.00	692.199	692.008	692.008
CIRC. Pendiente	248336.047	355900.577	4611339.185	500.000	692.179	692.179	78.626610	0.000	-1.513	0.00	0.00	692.179	691.972	691.972
CIRC. Pendiente	248340.000	355904.315	4611340.472	500.000	692.173	692.173	79.129915	0.000	-1.513	0.00	0.00	692.173	691.963	691.963
CIRC. Pendiente	248360.000	355923.373	4611346.532	500.000	692.142	692.142	81.676394	0.000	-1.513	0.00	0.00	692.142	691.934	691.934
RECTA Pendiente	248376.135	355938.916	4611350.861	0.000	692.118	692.118	83.730730	0.000	-1.513	0.00	0.00	692.118	691.979	691.979
RECTA Pendiente	248380.000	355942.655	4611351.838	0.000	692.112	692.112	83.730730	0.000	-1.513	0.00	0.00	692.112	691.989	691.989
RECTA Pendiente	248400.000	355962.006	4611356.894	0.000	692.082	692.082	83.730730	0.000	-1.513	0.00	0.00	692.082	691.855	691.855
RECTA Pendiente	248420.000	355981.356	4611361.950	0.000	692.052	692.052	83.730730	0.000	-1.513	0.00	0.00	692.052	691.867	691.867
RECTA Pendiente	248440.000	356000.707	4611367.005	0.000	692.021	692.021	83.730730	0.000	-1.513	0.00	0.00	692.021	691.968	691.968
RECTA Pendiente	248460.000	356020.057	4611372.061	0.000	691.991	691.991	83.730730	0.000	-1.513	0.00	0.00	691.991	692.000	692.000
CIRC. Pendiente	248465.919	356025.784	4611373.557	-500.000	691.982	691.982	83.730730	0.000	-1.513	0.00	0.00	691.982	691.991	691.991
CIRC. Pendiente	248480.000	356039.356	4611377.308	-500.000	691.961	691.961	81.937929	0.000	-1.513	0.00	0.00	691.961	691.971	691.971
CIRC. KV 49719	248500.000	356058.439	4611383.289	-500.000	691.933	691.933	79.391450	0.000	-1.192	0.00	0.00	691.933	691.935	691.935
CIRC. KV 49719	248520.000	356077.268	4611390.029	-500.000	691.913	691.913	76.844971	0.000	-0.790	0.00	0.00	691.913	691.843	691.843
CIRC. Pendiente	248540.000	356095.812	4611397.515	-500.000	691.901	691.901	74.298492	0.000	-0.508	0.00	0.00	691.901	691.826	691.826
RECTA Pendiente	248543.954	356099.443	4611399.083	0.000	691.899	691.899	73.795002	0.000	-0.508	0.00	0.00	691.899	691.826	691.826
RECTA Pendiente	248560.000	356114.148	4611405.503	0.000	691.891	691.891	73.795002	0.000	-0.508	0.00	0.00	691.891	691.826	691.826
RECTA Pendiente	248580.000	356132.477	4611413.505	0.000	691.881	691.881	73.795002	0.000	-0.508	0.00	0.00	691.881	691.777	691.777
RECTA Pendiente	248600.000	356150.807	4611421.507	0.000	691.871	691.871	73.795002	0.000	-0.508	0.00	0.00	691.871	691.766	691.766
RECTA Pendiente	248620.000	356169.136	4611429.509	0.000	691.861	691.861	73.795002	0.000	-0.508	0.00	0.00	691.861	691.774	691.774

Istram 20.08.08.26 10/02/21 11:48:55 200009 pagina 6

PROYECTO : ESTUDIO INFORMATIVO DE LA INTEGRACION DEL FFCC EN VALLADOLID
GRUPO : 2 : EJES ANCHO 1668 ALTERNATIVA 2
EJE : 77 : VIA 1 - VIA 6 IBERICO

* * * PUNTOS DEL EJE EN PLANTA * * *

TIPO	P.K.	X	Y	RADIO	Z RAS IZ.	Z RAS DR.	AZIMUT	DIST. EJE	PEN(o/oo)	PERAL_I	PERAL_D	HILO BAJO	ZT (eje)	Z TERR.
RECTA Pendiente	248640.000	356187.466	4611437.511	0.000	691.850	691.850	73.795002	0.000	-0.508	0.00	0.00	691.850	691.783	691.783
RECTA Pendiente	248660.000	356205.795	4611445.513	0.000	691.840	691.840	73.795002	0.000	-0.508	0.00	0.00	691.840	691.792	691.792
RECTA Pendiente	248680.000	356224.124	4611453.515	0.000	691.830	691.830	73.795002	0.000	-0.508	0.00	0.00	691.830	691.800	691.800
RECTA Pendiente	248700.000	356242.454	4611461.517	0.000	691.820	691.820	73.795002	0.000	-0.508	0.00	0.00	691.820	691.809	691.809
RECTA KV 38700	248720.000	356260.783	4611469.519	0.000	691.810	691.810	73.795002	0.000	-0.481	0.00	0.00	691.810	691.817	691.817
RECTA KV 38700	248740.000	356279.113	4611477.521	0.000	691.805	691.805	73.795002	0.000	0.035	0.00	0.00	691.805	691.826	691.826
RECTA KV 38700	248760.000	356297.442	4611485.523	0.000	691.811	691.811	73.795002	0.000	0.552	0.00	0.00	691.811	691.834	691.834
RECTA KV 38700	248780.000	356315.772	4611493.525	0.000	691.827	691.827	73.795002	0.000	1.069	0.00	0.00	691.827	691.843	691.843
RECTA KV 38700	248800.000	356334.101	4611501.527	0.000	691.854	691.854	73.795002	0.000	1.586	0.00	0.00	691.854	691.851	691.851
RECTA KV 38700	248820.000	356352.430	4611509.529	0.000	691.891	691.891	73.795002	0.000	2.103	0.00	0.00	691.891	691.865	691.865
RECTA Rampa	248840.000	356370.760	4611517.531	0.000	691.938	691.938	73.795002	0.000	2.475	0.00	0.00	691.938	691.889	691.889
RECTA Rampa	248860.000	356389.089	4611525.533	0.000	691.987	691.987	73.795002	0.000	2.475	0.00	0.00	691.987	691.909	691.909
RECTA Rampa	248880.000	356407.419	4611533.535	0.000	692.037	692.037	73.795002	0.000	2.475	0.00	0.00	692.037	691.940	691.940
RECTA Rampa	248900.000	356425.748	4611541.538	0.000	692.086	692.086	73.795002	0.000	2.475	0.00	0.00	692.086	691.944	691.944
RECTA Rampa	248920.000	356444.078	4611549.540	0.000	692.136	692.136	73.795002	0.000	2.475	0.00	0.00	692.136	691.929	691.929
RECTA KV -14716	248940.000	356462.407	4611557.542	0.000	692.185	692.185	73.795002	0.000	2.357	0.00	0.00	692.185	691.995	691.995
RECTA KV -14716	248960.000	356480.736	4611565.544	0.000	692.219	692.219	73.795002	0.000	0.998	0.00	0.00	692.219	692.039	692.039
RECTA Rampa	248980.000	356499.066	4611573.546	0.000	692.230	692.230	73.795002	0.000	0.436	0.00	0.00	692.230	691.991	691.991
CIRC. Rampa	248983.328	356502.116	4611574.877	-600.000	692.231	692.231	73.795002	0.000	0.436	0.00	0.00	692.231	691.993	691.993
CIRC. Rampa	249000.000	356517.301	4611581.759	-600.000	692.238	692.238	72.026058	0.000	0.436	0.00	0.00	692.238	692.000	692.000
CIRC. Rampa	249020.000	356535.255	4611590.567	-600.000	692.247	692.247	69.903992	0.000	0.436	0.00	0.00	692.247	691.953	691.953
CIRC. KV 57451	249040.000	356552.907	4611599.969	-600.000	692.257	692.257	67.781926	0.000	0.632	0.00	0.00	692.257	691.940	691.940
CIRC. Rampa	249060.000	356570.235	4611609.954	-600.000	692.273	692.273	65.659860	0.000	0.958	0.00	0.00	692.273	692.039	692.039
RECTA Rampa	249060.631	356570.777	4611610.278	0.000	692.274	692.274	65.592869	0.000	0.958	0.00	0.00	692.274	692.040	692.040
RECTA Rampa	249080.000	356587.385	4611620.244	0.000	692.292	692.292	65.592869	0.000	0.958	0.00	0.00	692.292	692.055	692.055
RECTA Rampa	249100.000	356604.534	4611630.535	0.000	692.311	692.311	65.592869	0.000	0.958	0.00	0.00	692.311	692.037	692.037
RECTA Rampa	249120.000	356621.683	4611640.826	0.000	692.331	692.331	65.592869	0.000	0.958	0.00	0.00	692.331	692.044	692.044
RECTA Rampa	249140.000	356638.833	4611651.116	0.000	692.350	692.350	65.592869	0.000	0.958	0.00	0.00	692.350	692.091	692.091
RECTA Rampa	249160.000	356655.982	4611661.407	0.000	692.369	692.369	65.592869	0.000	0.958	0.00	0.00	692.369	692.156	692.156
CIRC. Rampa	249175.360	356669.153	4611669.310	350.000	692.384	692.384	65.592869	0.000	0.958	0.00	0.00	692.384	692.179	692.179
CIRC. Rampa	249180.000	356673.147	4611671.671	350.000	692.388	692.388	66.436871	0.000	0.958	0.00	0.00	692.388	692.186	692.186
CIRC. Rampa	249200.000	356690.709	4611681.235	350.000	692.407	692.407	70.074699	0.000	0.958	0.00	0.00	692.407	692.237	692.237
CIRC. Rampa	249220.000	356708.789	4611689.779	350.000	692.426	692.426	73.712526	0.000	0.958	0.00	0.00	692.426	692.253	692.253
RECTA Rampa	249222.452	356711.039	4611690.755	0.000	692.429	692.429	74.158553	0.000	0.958	0.00	0.00	692.429	692.257	692.257
RECTA Rampa	249240.000	356727.161	4611697.684	0.000	692.446	692.446	74.158553	0.000	0.958	0.00	0.00	692.446	692.285	692.285
RECTA Rampa	249260.000	356745.536	4611705.582	0.000	692.465	692.465	74.158553	0.000	0.958	0.00	0.00	692.465	692.313	692.313
RECTA Rampa	249280.000	356763.910	4611713.479	0.000	692.484	692.484	74.158553	0.000	0.958	0.00	0.00	692.484	692.319	692.319
RECTA Rampa	249300.000	356782.285	4611721.376	0.000	692.503	692.503	74.158553	0.000	0.958	0.00	0.00	692.503	692.337	692.337
RECTA Rampa	249320.000	356800.660	4611729.273	0.000	692.522	692.522	74.158553	0.000	0.958	0.00	0.00	692.522	692.373	692.373
RECTA Rampa	249340.000	356819.035	4611737.170	0.000	692.541	692.541	74.158553	0.000	0.958	0.00	0.00	692.541	692.392	692.392
RECTA Rampa	249360.000	356837.410	4611745.068	0.000	692.561	692.561	74.158553	0.000	0.958	0.00	0.00	692.561	692.357	692.357
RECTA KV 15752	249380.000	356855.784	4611752.965	0.000	692.581	692.581	74.158553	0.000	1.306	0.00	0.00	692.581	692.406	692.406
RECTA KV 15752	249400.000	356874.159	4611760.862	0.000	692.619	692.619	74.158553	0.000	2.576	0.00	0.00	692.619	692.551	692.551
CLOT. KV 15752	249404.800	356878.569	4611762.757	-1000000.000	692.633	692.633	74.158553	0.000	2.880	0.00	0.00	692.633	692.568	692.568
CLOT. KV 15752	249420.000	356892.533	4611768.762	-15607.058	692.684	692.684	74.127552	0.000	3.845	0.00	6.46	692.684	692.617	692.617
CLOT. Rampa	249440.000	356910.897	4611776.685	-6739.377	692.773	692.773	73.992299	0.000	5.049	0.00	14.95	692.773	692.719	692.719
CLOT. Rampa	249460.000	356929.237	4611784.662	-4297.567	692.874	692.874	73.749701	0.000	5.049	0.00	23.45	692.874	692.836	692.836
CLOT. Rampa	249480.000	356947.540	4611792.725	-3154.595	692.975	692.975	73.399759	0.000	5.049	0.00	31.95	692.975	692.898	692.898
CLOT. Rampa	249500.000	356965.791	4611800.904	-2491.864	693.076	693.076	72.942473	0.000	5.049	0.00	40.44	693.076	692.984	692.984
CLOT. Rampa	249520.000	356983.976	4611809.229	-2059.248	693.177	693.177	72.377842	0.000	5.049	0.00	48.94	693.177	693.113	693.113

Istram 20.08.08.26 10/02/21 11:48:55 200009 pagina 7

PROYECTO : ESTUDIO INFORMATIVO DE LA INTEGRACION DEL FFCC EN VALLADOLID
GRUPO : 2 : EJES ANCHO 1668 ALTERNATIVA 2
EJE : 77 : VIA 1 - VIA 6 IBERICO

* * * PUNTOS DEL EJE EN PLANTA * * *

TIPO	P.K.	X	Y	RADIO	Z RAS IZ.	Z RAS DR.	AZIMUT	DIST. EJE	PEN(o/oo)	PERAL_I	PERAL_D	HILO BAJO	ZT (eje)	Z TERR.
CLOT. Rampa	249540.000	357002.079	4611817.730	-1754.626	693.278	693.278	71.705867	0.000	5.049	0.00	57.44	693.278	693.254	693.254
CLOT. Rampa	249560.000	357020.084	4611826.437	-1528.514	693.379	693.379	70.926547	0.000	5.049	0.00	65.93	693.379	693.314	693.314
CLOT. Rampa	249580.000	357037.974	4611835.378	-1354.026	693.480	693.480	70.039883	0.000	5.049	0.00	74.43	693.480	693.405	693.405
CLOT. Rampa	249600.000	357055.729	4611844.583	-1215.294	693.581	693.581	69.045875	0.000	5.049	0.00	82.93	693.581	693.548	693.548
CLOT. Rampa	249620.000	357073.331	4611854.079	-1102.348	693.682	693.682	67.944522	0.000	5.049	0.00	91.42	693.682	693.665	693.665
CLOT. Rampa	249640.000	357090.758	4611863.893	-1008.611	693.783	693.783	66.735824	0.000	5.049	0.00	99.92	693.783	693.759	693.759
CIRC. Rampa	249651.957	357101.083	4611869.922	-959.816	693.844	693.844	65.961928	0.000	5.049	0.00	105.00	693.844	693.816	693.816
CIRC. Rampa	249660.000	357107.986	4611874.050	-959.816	693.884	693.884	65.428463	0.000	5.049	0.00	105.00	693.884	693.854	693.854
CIRC. Rampa	249680.000	357125.000	4611884.562	-959.816	693.985	693.985	64.101917	0.000	5.049	0.00	105.00	693.985	693.927	693.927
CIRC. KV -77774	249700.000	357141.791	4611895.427	-959.816	694.084	694.084	62.775371	0.000	4.844	0.00	105.00	694.084	694.155	694.155
CIRC. KV -77774	249720.000	357158.352	4611906.639	-959.816	694.179	694.179	61.448826	0.000	4.587	0.00	105.00	694.179	694.222	694.222
CIRC. KV -77774	249740.000	357174.676	4611918.194	-959.816	694.268	694.268	60.122280	0.000	4.330	0.00	105.00	694.268	694.305	694.305
CIRC. KV -77774	249760.000	357190.756	4611930.087	-959.816	694.352	694.352	58.795734	0.000	4.072	0.00	105.00	694.352	694.344	694.344
CIRC. KV -77774	249780.000	357206.584	4611942.312	-959.816	694.431	694.431	57.469188	0.000	3.815	0.00	105.00	694.431	694.430	694.430
CIRC. Rampa	249800.000	357222.154	4611954.864	-959.816	694.506	694.506	56.142643	0.000	3.749	0.00	105.00	694.506	694.518	694.518
CIRC. Rampa	249820.000	357237.459	4611967.738	-959.816	694.581	694.581	54.816097	0.000	3.749	0.00	105.00	694.581	694.560	694.560
CIRC. Rampa	249840.000	357252.493	4611980.928	-959.816	694.656	694.656	53.489551	0.000	3.749	0.00	105.00	694.656	694.625	694.625
CIRC. Rampa	249860.000	357267.248	4611994.428	-959.816	694.731	694.731	52.163006	0.000	3.749	0.00	105.00	694.731	694.693	694.693
CIRC. Rampa	249880.000	357281.720	4612008.233	-959.816	694.806	694.806	50.836460	0.000	3.749	0.00	105.00	694.806	694.803	694.803
CIRC. Rampa	249900.000	357295.900	4612022.336	-959.816	694.881	694.881	49.509914	0.000	3.749	0.00	105.00	694.881	694.869	694.869
CIRC. KV 76327	249920.000	357309.783	4612036.732	-959.816	694.956	694.956	48.183368	0.000	3.874	0.00	105.00	694.956	694.938	694.938
CIRC. KV 76327	249940.000	357323.364	4612051.414	-959.816	695.037	695.037	46.856823	0.000	4.136	0.00	105.00	695.037	695.022	695.022
CIRC. KV 76327	249960.000	357336.635	4612066.376	-959.816	695.122	695.122	45.530277	0.000	4.398	0.00	105.00	695.122	695.073	695.073
CIRC. KV 76327	249980.000	357349.592	4612081.611	-959.816	695.212	695.212	44.203731	0.000	4.660	0.00	105.00	695.212	695.171	695.171
CIRC. Rampa	250000.000	357362.229	4612097.112	-959.816	695.308	695.308	42.877186	0.000	4.797	0.00	105.00	695.308	695.245	695.245
CIRC. Rampa	250020.000	357374.540	4612112.874	-959.816	695.404	695.404	41.550640	0.000	4.797	0.00	105.00	695.404	695.333	695.333
CIRC. Rampa	250040.000	357386.520	4612128.888	-959.816	695.500	695.500	40.224094	0.000	4.797	0.00	105.00	695.500	695.534	695.534
CIRC. Rampa	250060.000	357398.163	4612145.149	-959.816	695.596	695.596	38.897548	0.000	4.797	0.00	105.00	695.596	695.603	695.603
CIRC. Rampa	250080.000	357409.465	4612161.649	-959.816	695.691	695.691	37.571003	0.000	4.797	0.00	105.00	695.691	695.671	695.671
CIRC. Rampa	250100.000	357420.421	4612178.381	-959.816	695.787	695.787	36.244457	0.000	4.797	0.00	105.00	695.787	695.720	695.720
CLOT. Rampa	250106.072	357423.679	4612183.506	-959.816	695.817	695.817	35.841696	0.000	4.797	0.00	105.00	695.817	695.758	695.758
CLOT. Rampa	250120.000	357431.030	4612195.335	-1074.643	695.883	695.883	34.967265	0.000	4.797	0.00	93.78	695.883	695.846	695.846
CLOT. KV -111785	250140.000	357441.321	4612212.484	-1297.554	695.979	695.979	33.884233	0.000	4.753	0.00	77.67	695.979	695.969	695.969
CLOT. KV -111785	250160.000	357451.346	4612229.790	-1637.145	696.072	696.072	33.004743	0.000	4.574	0.00	61.56	696.072	696.054	696.054
CLOT. KV -111785	250180.000	357461.159	4612247.216	-2217.499	696.162	696.162	32.328794	0.000	4.395	0.00	45.45	696.162	696.054	696.054
CLOT. KV -111785	250200.000	357470.815	4612264.731	-3435.278	696.248	696.248	31.856387	0.000	4.216	0.00	29.34	696.248	696.218	696.218
CLOT. KV -111785	250220.000	357480.369	4612282.302	-7619.856	696.331	696.331	31.587521	0.000	4.037	0.00	13.23	696.331	696.343	696.343
RECTA KV -111785	250236.419	357488.175	4612296.746	0.000	696.396	696.396	31.518933	0.000	3.890	0.00	0.00	696.396	696.389	696.389
RECTA Rampa	250240.000	357489.877	4612299.897	0.000	696.410	696.410	31.518933	0.000	3.885	0.00	0.00	696.410	696.399	696.399
RECTA Rampa	250260.000	357499.379	4612317.496	0.000	696.487	696.487	31.518933	0.000	3.885	0.00	0.00	696.487	696.483	696.483
RECTA Rampa	250280.000	357508.881	4612335.094	0.000	696.565	696.565	31.518933	0.000	3.885	0.00	0.00	696.565	696.516	696.516
RECTA Rampa	250300.000	357518.384	4612352.693	0.000	696.643	696.643	31.518933	0.000	3.885	0.00	0.00	696.643	696.598	696.598
RECTA Rampa	250320.000	357527.886	4612370.291	0.000	696.721	696.721	31.518933	0.000	3.885	0.00	0.00	696.721	696.705	696.705
RECTA Rampa	250340.000	357537.388	4612387.890	0.000	696.798	696.798	31.518933	0.000	3.885	0.00	0.00	696.798	696.750	696.750
RECTA KV -14675	250360.000	357546.891	4612405.488	0.000	696.876	696.876	31.518933	0.000	3.721	0.00	0.00	696.876	696.766	696.766
RECTA KV -14675	250380.000	357556.393	4612423.086	0.000	696.937	696.937	31.518933	0.000	2.358	0.00	0.00	696.937	696.726	696.726
RECTA KV -14675	250400.000	357565.896	4612440.685	0.000	696.970	696.970	31.518933	0.000	0.995	0.00	0.00	696.970	696.770	696.770
RECTA KV -14675	250420.000	357575.398	4612458.283	0.000	696.976	696.976	31.518933	0.000	-0.368	0.00	0.00	696.976	696.770	696.770
RECTA Pendiente	250440.000	357584.900	4612475.882	0.000	696.956	696.956	31.518933	0.000	-1.567	0.00	0.00	696.956	696.770	696.770
CLOT. Pendiente	250453.672	357591.396	4612487.912	1000000.000	696.934	696.934	31.518933	0.000	-1.567	0.00	0.00	696.934	696.770	696.770

Istram 20.08.08.26 10/02/21 11:48:55 200009 pagina 8

PROYECTO : ESTUDIO INFORMATIVO DE LA INTEGRACION DEL FFCC EN VALLADOLID
GRUPO : 2 : EJES ANCHO 1668 ALTERNATIVA 2
EJE : 77 : VIA 1 - VIA 6 IBERICO

* * * PUNTOS DEL EJE EN PLANTA * * *

TIPO	P.K.	X	Y	RADIO	Z RAS IZ.	Z RAS DR.	AZIMUT	DIST. EJE	PEN(o/oo)	PERAL_I	PERAL_D	HILO BAJO	ZT (eje)	Z TERR.
CLOT. Pendiente	250460.000	357594.403	4612493.480	134325.113	696.924	696.924	31.520433	0.000	-1.567	0.00	0.00	696.924	696.770	696.770
CIRC. Pendiente	250463.672	357596.147	4612496.711	85000.000	696.918	696.918	31.522678	0.000	-1.567	0.00	0.00	696.918	696.757	696.757
CIRC. Pendiente	250480.000	357603.907	4612511.077	85000.000	696.893	696.893	31.534907	0.000	-1.567	0.00	0.00	696.893	696.696	696.696
CIRC. Pendiente	250500.000	357613.416	4612528.672	85000.000	696.861	696.861	31.549887	0.000	-1.567	0.00	0.00	696.861	696.664	696.664
CIRC. Pendiente	250520.000	357622.929	4612546.265	85000.000	696.830	696.830	31.564866	0.000	-1.567	0.00	0.00	696.830	696.700	696.700
CLOT. Pendiente	250531.208	357628.262	4612556.123	85000.000	696.813	696.813	31.573261	0.000	-1.567	0.00	0.00	696.813	696.711	696.711
CLOT. Pendiente	250540.000	357632.446	4612563.855	703471.602	696.799	696.799	31.576951	0.000	-1.567	0.00	0.00	696.799	696.719	696.719
RECTA Pendiente	250541.208	357633.021	4612564.918	0.000	696.797	696.797	31.577005	0.000	-1.567	0.00	0.00	696.797	696.721	696.721
RECTA KV 47093	250560.000	357641.965	4612581.445	0.000	696.768	696.768	31.577005	0.000	-1.424	0.00	0.00	696.768	696.751	696.751
RECTA KV 47093	250580.000	357651.483	4612599.035	0.000	696.744	696.744	31.577005	0.000	-0.999	0.00	0.00	696.744	696.758	696.758
RECTA KV 47093	250600.000	357661.001	4612616.625	0.000	696.728	696.728	31.577005	0.000	-0.575	0.00	0.00	696.728	696.748	696.748
RECTA KV 47093	250620.000	357670.520	4612634.215	0.000	696.721	696.721	31.577005	0.000	-0.150	0.00	0.00	696.721	696.737	696.737
RECTA KV 47093	250640.000	357680.038	4612651.804	0.000	696.722	696.722	31.577005	0.000	0.275	0.00	0.00	696.722	696.747	696.747
RECTA KV 47093	250660.000	357689.557	4612669.394	0.000	696.732	696.732	31.577005	0.000	0.699	0.00	0.00	696.732	696.794	696.794
RECTA Rampa	250680.000	357699.075	4612686.984	0.000	696.749	696.749	31.577005	0.000	0.981	0.00	0.00	696.749	696.859	696.859
RECTA Rampa	250700.000	357708.594	4612704.574	0.000	696.769	696.769	31.577005	0.000	0.981	0.00	0.00	696.769	696.889	696.889
RECTA Rampa	250720.000	357718.112	4612722.163	0.000	696.789	696.789	31.577005	0.000	0.981	0.00	0.00	696.789	696.883	696.883
RECTA Rampa	250740.000	357727.630	4612739.753	0.000	696.808	696.808	31.577005	0.000	0.981	0.00	0.00	696.808	696.877	696.877
RECTA Rampa	250760.000	357737.149	4612757.343	0.000	696.828	696.828	31.577005	0.000	0.981	0.00	0.00	696.828	696.847	696.847
RECTA Rampa	250780.000	357746.667	4612774.933	0.000	696.848	696.848	31.577005	0.000	0.981	0.00	0.00	696.848	696.835	696.835
RECTA Rampa	250800.000	357756.186	4612792.522	0.000	696.867	696.867	31.577005	0.000	0.981	0.00	0.00	696.867	696.848	696.848
RECTA Rampa	250820.000	357765.704	4612810.112	0.000	696.887	696.887	31.577005	0.000	0.981	0.00	0.00	696.887	696.897	696.897
RECTA Rampa	250840.000	357775.222	4612827.702	0.000	696.906	696.906	31.577005	0.000	0.981	0.00	0.00	696.906	696.890	696.890
RECTA Rampa	250860.000	357784.741	4612845.292	0.000	696.926	696.926	31.577005	0.000	0.981	0.00	0.00	696.926	696.861	696.861
RECTA Rampa	250880.000	357794.259	4612862.881	0.000	696.946	696.946	31.577005	0.000	0.981	0.00	0.00	696.946	696.841	696.841
RECTA Rampa	250900.000	357803.778	4612880.471	0.000	696.965	696.965	31.577005	0.000	0.981	0.00	0.00	696.965	696.833	696.833
RECTA KV -65205	250920.000	357813.296	4612898.061	0.000	696.985	696.985	31.577005	0.000	0.920	0.00	0.00	696.985	696.838	696.838
RECTA KV -65205	250940.000	357822.814	4612915.651	0.000	697.000	697.000	31.577005	0.000	0.613	0.00	0.00	697.000	696.849	696.849
RECTA KV -65205	250960.000	357832.333	4612933.241	0.000	697.009	697.009	31.577005	0.000	0.307	0.00	0.00	697.009	696.853	696.853
RECTA KV -65205	250980.000	357841.851	4612950.830	0.000	697.012	697.012	31.577005	0.000	-0.000	0.00	0.00	697.012	696.790	696.790
RECTA KV -65205	251000.000	357851.370	4612968.420	0.000	697.009	697.009	31.577005	0.000	-0.307	0.00	0.00	697.009	696.758	696.758
RECTA Pendiente	251020.000	357860.888	4612986.010	0.000	697.000	697.000	31.577005	0.000	-0.553	0.00	0.00	697.000	696.757	696.757
RECTA Pendiente	251040.000	357870.407	4613003.600	0.000	696.989	696.989	31.577005	0.000	-0.553	0.00	0.00	696.989	696.755	696.755
RECTA Pendiente	251060.000	357879.925	4613021.189	0.000	696.978	696.978	31.577005	0.000	-0.553	0.00	0.00	696.978	696.817	696.817
RECTA Pendiente	251080.000	357889.443	4613038.779	0.000	696.967	696.967	31.577005	0.000	-0.553	0.00	0.00	696.967	696.817	696.817
RECTA Pendiente	251100.000	357898.962	4613056.369	0.000	696.956	696.956	31.577005	0.000	-0.553	0.00	0.00	696.956	696.857	696.857
RECTA Pendiente	251120.000	357908.480	4613073.959	0.000	696.945	696.945	31.577005	0.000	-0.553	0.00	0.00	696.945	696.834	696.834
RECTA Pendiente	251140.000	357917.999	4613091.548	0.000	696.934	696.934	31.577005	0.000	-0.553	0.00	0.00	696.934	696.792	696.792
RECTA Pendiente	251160.000	357927.517	4613109.138	0.000	696.923	696.923	31.577005	0.000	-0.553	0.00	0.00	696.923	696.814	696.814
RECTA Pendiente	251180.000	357937.035	4613126.728	0.000	696.912	696.912	31.577005	0.000	-0.553	0.00	0.00	696.912	696.825	696.825
RECTA Pendiente	251200.000	357946.554	4613144.318	0.000	696.901	696.901	31.577005	0.000	-0.553	0.00	0.00	696.901	696.807	696.807
RECTA Pendiente	251220.000	357956.072	4613161.907	0.000	696.890	696.890	31.577005	0.000	-0.553	0.00	0.00	696.890	696.788	696.788
RECTA Pendiente	251240.000	357965.591	4613179.497	0.000	696.879	696.879	31.577005	0.000	-0.553	0.00	0.00	696.879	696.767	696.767
RECTA Pendiente	251260.000	357975.109	4613197.087	0.000	696.867	696.867	31.577005	0.000	-0.553	0.00	0.00	696.867	696.746	696.746
RECTA Pendiente	251280.000	357984.627	4613214.677	0.000	696.856	696.856	31.577005	0.000	-0.553	0.00	0.00	696.856	696.728	696.728
RECTA Pendiente	251300.000	357994.146	4613232.267	0.000	696.845	696.845	31.577005	0.000	-0.553	0.00	0.00	696.845	696.712	696.712
RECTA Pendiente	251320.000	358003.664	4613249.856	0.000	696.834	696.834	31.577005	0.000	-0.553	0.00	0.00	696.834	696.710	696.710
RECTA Pendiente	251340.000	358013.183	4613267.446	0.000	696.823	696.823	31.577005	0.000	-0.553	0.00	0.00	696.823	696.752	696.752
RECTA Pendiente	251360.000	358022.701	4613285.036	0.000	696.812	696.812	31.577005	0.000	-0.553	0.00	0.00	696.812	696.787	696.787
RECTA Pendiente	251380.000	358032.220	4613302.626	0.000	696.801	696.801	31.577005	0.000	-0.553	0.00	0.00	696.801	696.738	696.738

Istram 20.08.08.26 10/02/21 11:48:55 200009 pagina 9

PROYECTO : ESTUDIO INFORMATIVO DE LA INTEGRACION DEL FFCC EN VALLADOLID
GRUPO : 2 : EJES ANCHO 1668 ALTERNATIVA 2
EJE : 77 : VIA 1 - VIA 6 IBERICO

* * * PUNTOS DEL EJE EN PLANTA * * *

TIPO	P.K.	X	Y	RADIO	Z RAS IZ.	Z RAS DR.	AZIMUT	DIST. EJE	PEN(o/oo)	PERAL_I	PERAL_D	HILO BAJO	ZT (eje)	Z TERR.
RECTA Pendiente	251400.000	358041.738	4613320.215	0.000	696.790	696.790	31.577005	0.000	-0.553	0.00	0.00	696.790	696.712	696.712
RECTA KV 93917	251420.000	358051.256	4613337.805	0.000	696.779	696.779	31.577005	0.000	-0.551	0.00	0.00	696.779	696.727	696.727
RECTA KV 93917	251440.000	358060.775	4613355.395	0.000	696.770	696.770	31.577005	0.000	-0.338	0.00	0.00	696.770	696.749	696.749
RECTA KV 93917	251460.000	358070.293	4613372.985	0.000	696.765	696.765	31.577005	0.000	-0.125	0.00	0.00	696.765	696.747	696.747
RECTA KV 93917	251480.000	358079.812	4613390.574	0.000	696.765	696.765	31.577005	0.000	0.088	0.00	0.00	696.765	696.710	696.710
RECTA Rampa	251500.000	358089.330	4613408.164	0.000	696.769	696.769	31.577005	0.000	0.299	0.00	0.00	696.769	696.677	696.677
RECTA Rampa	251520.000	358098.848	4613425.754	0.000	696.775	696.775	31.577005	0.000	0.299	0.00	0.00	696.775	696.678	696.678
RECTA Rampa	251540.000	358108.367	4613443.344	0.000	696.781	696.781	31.577005	0.000	0.299	0.00	0.00	696.781	696.682	696.682
RECTA Rampa	251560.000	358117.885	4613460.933	0.000	696.787	696.787	31.577005	0.000	0.299	0.00	0.00	696.787	696.679	696.679
RECTA Rampa	251580.000	358127.404	4613478.523	0.000	696.793	696.793	31.577005	0.000	0.299	0.00	0.00	696.793	696.668	696.668
RECTA KV -158128	251600.000	358136.922	4613496.113	0.000	696.799	696.799	31.577005	0.000	0.260	0.00	0.00	696.799	696.703	696.703
RECTA KV -158128	251620.000	358146.440	4613513.703	0.000	696.803	696.803	31.577005	0.000	0.133	0.00	0.00	696.803	696.711	696.711
RECTA KV -158128	251640.000	358155.959	4613531.293	0.000	696.804	696.804	31.577005	0.000	0.007	0.00	0.00	696.804	696.710	696.710
RECTA KV -158128	251660.000	358165.477	4613548.882	0.000	696.803	696.803	31.577005	0.000	-0.120	0.00	0.00	696.803	696.738	696.738
RECTA Pendiente	251680.000	358174.996	4613566.472	0.000	696.799	696.799	31.577005	0.000	-0.207	0.00	0.00	696.799	696.722	696.722
RECTA Pendiente	251700.000	358184.514	4613584.062	0.000	696.795	696.795	31.577005	0.000	-0.207	0.00	0.00	696.795	696.700	696.700
RECTA Pendiente	251720.000	358194.033	4613601.652	0.000	696.791	696.791	31.577005	0.000	-0.207	0.00	0.00	696.791	696.700	696.700
RECTA Pendiente	251740.000	358203.551	4613619.241	0.000	696.787	696.787	31.577005	0.000	-0.207	0.00	0.00	696.787	696.700	696.700
CLOT. Pendiente	251753.539	358209.994	4613631.149	1000000.000	696.784	696.784	31.577005	0.000	-0.207	0.00	0.00	696.784	696.685	696.685
CLOT. Pendiente	251760.000	358213.069	4613636.831	928647.030	696.783	696.783	31.577227	0.000	-0.207	0.00	0.00	696.783	696.677	696.677
CLOT. Pendiente	251780.000	358222.588	4613654.421	226748.694	696.779	696.779	31.580720	0.000	-0.207	0.00	0.00	696.779	696.677	696.677
CIRC. Pendiente	251783.539	358224.273	4613657.533	200000.000	696.778	696.778	31.581780	0.000	-0.207	0.00	0.00	696.778	696.676	696.676
CIRC. Pendiente	251800.000	358232.108	4613672.009	200000.000	696.775	696.775	31.587020	0.000	-0.207	0.00	0.00	696.775	696.672	696.672
CIRC. KV 2713068	251820.000	358241.631	4613689.597	200000.000	696.770	696.770	31.593386	0.000	-0.206	0.00	0.00	696.770	696.649	696.649
CIRC. KV 2713068	251840.000	358251.154	4613707.184	200000.000	696.766	696.766	31.599752	0.000	-0.198	0.00	0.00	696.766	696.617	696.617
CIRC. KV 2713068	251860.000	358260.680	4613724.770	200000.000	696.763	696.763	31.606118	0.000	-0.191	0.00	0.00	696.763	696.587	696.587
CLOT. KV 2713068	251861.116	358261.212	4613725.751	200000.000	696.762	696.762	31.606474	0.000	-0.190	0.00	0.00	696.762	696.590	696.590
CLOT. KV 2713068	251880.000	358270.207	4613742.355	539757.334	696.759	696.759	31.610593	0.000	-0.183	0.00	0.00	696.759	696.641	696.641
CLOT. KV 2713068	251891.116	358275.503	4613752.129	-1000000.000	696.757	696.757	31.611248	0.000	-0.179	0.00	0.00	696.757	696.662	696.662
CLOT. Pendiente	251900.000	358279.735	4613759.940	-675379.549	696.755	696.755	31.610830	0.000	-0.178	0.00	0.00	696.755	696.678	696.678
CLOT. Pendiente	251920.000	358289.262	4613777.525	-207728.227	696.752	696.752	31.606822	0.000	-0.178	0.00	0.00	696.752	696.740	696.740
CIRC. Pendiente	251921.116	358289.794	4613778.506	-200000.000	696.751	696.751	31.606474	0.000	-0.178	0.00	0.00	696.751	696.745	696.745
CIRC. Pendiente	251940.000	358298.788	4613795.110	-200000.000	696.748	696.748	31.600463	0.000	-0.178	0.00	0.00	696.748	696.828	696.828
CIRC. Pendiente	251960.000	358308.312	4613812.697	-200000.000	696.745	696.745	31.594096	0.000	-0.178	0.00	0.00	696.745	696.824	696.824
CIRC. Pendiente	251980.000	358317.834	4613830.285	-200000.000	696.741	696.741	31.587730	0.000	-0.178	0.00	0.00	696.741	696.758	696.758
CIRC. Pendiente	252000.000	358327.355	4613847.873	-200000.000	696.737	696.737	31.581364	0.000	-0.178	0.00	0.00	696.737	696.806	696.806
CLOT. Pendiente	252001.826	358328.224	4613849.479	-200000.000	696.737	696.737	31.580783	0.000	-0.178	0.00	0.00	696.737	696.807	696.807
CLOT. Pendiente	252020.000	358336.874	4613865.463	-507348.698	696.734	696.734	31.576750	0.000	-0.178	0.00	0.00	696.734	696.814	696.814
RECTA Pendiente	252031.826	358342.502	4613875.864	0.000	696.732	696.732	31.576008	0.000	-0.178	0.00	0.00	696.732	696.791	696.791
RECTA Pendiente	252040.000	358346.392	4613883.053	0.000	696.730	696.730	31.576008	0.000	-0.178	0.00	0.00	696.730	696.776	696.776
RECTA KV 129645	252060.000	358355.910	4613900.643	0.000	696.727	696.727	31.576008	0.000	-0.163	0.00	0.00	696.727	696.740	696.740
RECTA KV 129645	252080.000	358365.428	4613918.233	0.000	696.725	696.725	31.576008	0.000	-0.008	0.00	0.00	696.725	696.710	696.710
RECTA KV 129645	252100.000	358374.946	4613935.823	0.000	696.726	696.726	31.576008	0.000	0.146	0.00	0.00	696.726	696.747	696.747
RECTA KV 129645	252120.000	358384.464	4613953.412	0.000	696.731	696.731	31.576008	0.000	0.300	0.00	0.00	696.731	696.705	696.705
RECTA Rampa	252140.000	358393.982	4613971.002	0.000	696.738	696.738	31.576008	0.000	0.439	0.00	0.00	696.738	696.642	696.642
RECTA Rampa	252160.000	358403.501	4613988.592	0.000	696.747	696.747	31.576008	0.000	0.439	0.00	0.00	696.747	696.594	696.594
RECTA Rampa	252180.000	358413.019	4614006.182	0.000	696.756	696.756	31.576008	0.000	0.439	0.00	0.00	696.756	696.616	696.616
RECTA Rampa	252200.000	358422.537	4614023.772	0.000	696.765	696.765	31.576008	0.000	0.439	0.00	0.00	696.765	696.639	696.639
RECTA Rampa	252220.000	358432.055	4614041.362	0.000	696.774	696.774	31.576008	0.000	0.439	0.00	0.00	696.774	696.608	696.608
RECTA Rampa	252240.000	358441.573	4614058.952	0.000	696.782	696.782	31.576008	0.000	0.439	0.00	0.00	696.782	696.583	696.583

Istram 20.08.08.26 10/02/21 11:48:55 200009 pagina 10

PROYECTO : ESTUDIO INFORMATIVO DE LA INTEGRACION DEL FFCC EN VALLADOLID
GRUPO : 2 : EJES ANCHO 1668 ALTERNATIVA 2
EJE : 77 : VIA 1 - VIA 6 IBERICO

* * * PUNTOS DEL EJE EN PLANTA * * *

TIPO	P.K.	X	Y	RADIO	Z RAS IZ.	Z RAS DR.	AZIMUT	DIST. EJE	PEN(o/oo)	PERAL_I	PERAL_D	HILO BAJO	ZT (eje)	Z TERR.
RECTA Rampa	252260.000	358451.091	4614076.542	0.000	696.791	696.791	31.576008	0.000	0.439	0.00	0.00	696.791	696.572	696.572
RECTA Rampa	252280.000	358460.609	4614094.132	0.000	696.800	696.800	31.576008	0.000	0.439	0.00	0.00	696.800	696.583	696.583
RECTA KV -3656426	252300.000	358470.128	4614111.722	0.000	696.809	696.809	31.576008	0.000	0.437	0.00	0.00	696.809	696.597	696.597
RECTA KV -3656426	252320.000	358479.646	4614129.312	0.000	696.817	696.817	31.576008	0.000	0.432	0.00	0.00	696.817	696.608	696.608
RECTA KV -3656426	252340.000	358489.164	4614146.902	0.000	696.826	696.826	31.576008	0.000	0.427	0.00	0.00	696.826	696.618	696.618
RECTA KV -3656426	252360.000	358498.682	4614164.491	0.000	696.834	696.834	31.576008	0.000	0.421	0.00	0.00	696.834	696.652	696.652
RECTA KV -3656426	252380.000	358508.200	4614182.081	0.000	696.843	696.843	31.576008	0.000	0.416	0.00	0.00	696.843	696.671	696.671
RECTA KV -3656426	252400.000	358517.718	4614199.671	0.000	696.851	696.851	31.576008	0.000	0.410	0.00	0.00	696.851	696.690	696.690
RECTA KV -3656426	252420.000	358527.236	4614217.261	0.000	696.859	696.859	31.576008	0.000	0.405	0.00	0.00	696.859	696.690	696.690
RECTA KV -3656426	252440.000	358536.755	4614234.851	0.000	696.867	696.867	31.576008	0.000	0.399	0.00	0.00	696.867	696.690	696.690
RECTA KV -3656426	252460.000	358546.273	4614252.441	0.000	696.875	696.875	31.576008	0.000	0.394	0.00	0.00	696.875	696.690	696.690
RECTA Rampa	252480.000	358555.791	4614270.031	0.000	696.883	696.883	31.576008	0.000	0.390	0.00	0.00	696.883	696.690	696.690
RECTA Rampa	252500.000	358565.309	4614287.621	0.000	696.891	696.891	31.576008	0.000	0.390	0.00	0.00	696.891	696.690	696.690
RECTA Rampa	252520.000	358574.827	4614305.211	0.000	696.899	696.899	31.576008	0.000	0.390	0.00	0.00	696.899	696.690	696.690
RECTA Rampa	252540.000	358584.345	4614322.801	0.000	696.906	696.906	31.576008	0.000	0.390	0.00	0.00	696.906	696.690	696.690
RECTA Rampa	252560.000	358593.863	4614340.391	0.000	696.914	696.914	31.576008	0.000	0.390	0.00	0.00	696.914	696.709	696.709
RECTA Rampa	252580.000	358603.381	4614357.981	0.000	696.922	696.922	31.576008	0.000	0.390	0.00	0.00	696.922	696.710	696.710
RECTA Rampa	252600.000	358612.900	4614375.570	0.000	696.930	696.930	31.576008	0.000	0.390	0.00	0.00	696.930	696.730	696.730
RECTA Rampa	252620.000	358622.418	4614393.160	0.000	696.938	696.938	31.576008	0.000	0.390	0.00	0.00	696.938	696.730	696.730
RECTA Rampa	252640.000	358631.936	4614410.750	0.000	696.946	696.946	31.576008	0.000	0.390	0.00	0.00	696.946	696.730	696.730
RECTA Rampa	252660.000	358641.454	4614428.340	0.000	696.953	696.953	31.576008	0.000	0.390	0.00	0.00	696.953	696.730	696.730
RECTA Rampa	252680.000	358650.972	4614445.930	0.000	696.961	696.961	31.576008	0.000	0.390	0.00	0.00	696.961	696.730	696.730
RECTA Rampa	252700.000	358660.490	4614463.520	0.000	696.969	696.969	31.576008	0.000	0.390	0.00	0.00	696.969	696.731	696.731
RECTA Rampa	252720.000	358670.008	4614481.110	0.000	696.977	696.977	31.576008	0.000	0.390	0.00	0.00	696.977	696.735	696.735
RECTA Rampa	252740.000	358679.527	4614498.700	0.000	696.985	696.985	31.576008	0.000	0.390	0.00	0.00	696.985	696.754	696.754
RECTA Rampa	252760.000	358689.045	4614516.290	0.000	696.992	696.992	31.576008	0.000	0.390	0.00	0.00	696.992	696.786	696.786
RECTA Rampa	252780.000	358698.563	4614533.880	0.000	697.000	697.000	31.576008	0.000	0.390	0.00	0.00	697.000	696.800	696.800
RECTA Rampa	252800.000	358708.081	4614551.470	0.000	697.008	697.008	31.576008	0.000	0.390	0.00	0.00	697.008	696.803	696.803
RECTA Rampa	252820.000	358717.599	4614569.059	0.000	697.016	697.016	31.576008	0.000	0.390	0.00	0.00	697.016	696.805	696.805
RECTA Rampa	252840.000	358727.117	4614586.649	0.000	697.024	697.024	31.576008	0.000	0.390	0.00	0.00	697.024	696.808	696.808
RECTA Rampa	252860.000	358736.635	4614604.239	0.000	697.031	697.031	31.576008	0.000	0.390	0.00	0.00	697.031	696.820	696.820
RECTA Rampa	252880.000	358746.154	4614621.829	0.000	697.039	697.039	31.576008	0.000	0.390	0.00	0.00	697.039	696.826	696.826
CLOT. Rampa	252884.120	358748.114	4614625.453	1000000.000	697.041	697.041	31.576008	0.000	0.390	0.00	0.00	697.041	696.829	696.829
CLOT. Rampa	252900.000	358755.674	4614639.418	15585.784	697.047	697.047	31.608440	0.000	0.390	10.11	0.00	697.047	696.839	696.839
CLOT. Rampa	252920.000	358765.217	4614656.994	6898.021	697.055	697.055	31.741576	0.000	0.390	22.83	0.00	697.055	696.850	696.850
CIRC. Rampa	252939.120	358774.388	4614673.772	4500.000	697.062	697.062	31.965054	0.000	0.390	35.00	0.00	697.062	696.850	696.850
CIRC. Rampa	252940.000	358774.811	4614674.543	4500.000	697.063	697.063	31.977501	0.000	0.390	35.00	0.00	697.063	696.850	696.850
CIRC. Rampa	252960.000	358784.479	4614692.051	4500.000	697.070	697.070	32.260443	0.000	0.390	35.00	0.00	697.070	696.850	696.850
CIRC. Rampa	252980.000	358794.224	4614709.516	4500.000	697.078	697.078	32.543385	0.000	0.390	35.00	0.00	697.078	696.850	696.850
CIRC. Rampa	253000.000	358804.048	4614726.937	4500.000	697.086	697.086	32.826327	0.000	0.390	35.00	0.00	697.086	696.834	696.834
CIRC. Rampa	253020.000	358813.948	4614744.315	4500.000	697.094	697.094	33.109269	0.000	0.390	35.00	0.00	697.094	696.762	696.762
CLOT. Rampa	253032.843	358820.346	4614755.450	4500.000	697.099	697.099	33.290955	0.000	0.390	35.00	0.00	697.099	696.703	696.703
CLOT. Rampa	253040.000	358823.925	4614761.649	5173.217	697.102	697.102	33.385623	0.000	0.390	30.45	0.00	697.102	696.670	696.670
CLOT. Rampa	253060.000	358833.968	4614778.944	8889.267	697.109	697.109	33.580300	0.000	0.390	17.72	0.00	697.109	696.532	696.532
CLOT. Rampa	253080.000	358844.050	4614796.217	31558.544	697.117	697.117	33.672090	0.000	0.390	4.99	0.00	697.117	696.471	696.471
RECTA Rampa	253087.843	358848.008	4614802.988	0.000	697.120	697.120	33.680000	0.000	0.390	0.00	0.00	697.120	696.459	696.459
RECTA Rampa	253100.000	358854.144	4614813.483	0.000	697.125	697.125	33.680000	0.000	0.390	0.00	0.00	697.125	696.440	696.440
RECTA Rampa	253120.000	358864.238	4614830.749	0.000	697.133	697.133	33.680000	0.000	0.390	0.00	0.00	697.133	696.475	696.475
RECTA Rampa	253140.000	358874.332	4614848.015	0.000	697.141	697.141	33.680000	0.000	0.390	0.00	0.00	697.141	696.704	696.704
RECTA Rampa	253160.000	358884.427	4614865.280	0.000	697.148	697.148	33.680000	0.000	0.390	0.00	0.00	697.148	696.651	696.651

Istram 20.08.08.26 10/02/21 11:48:55 200009 pagina 11

PROYECTO : ESTUDIO INFORMATIVO DE LA INTEGRACION DEL FFCC EN VALLADOLID
GRUPO : 2 : EJES ANCHO 1668 ALTERNATIVA 2
EJE : 77 : VIA 1 - VIA 6 IBERICO

* * * PUNTOS DEL EJE EN PLANTA * * *

TIPO	P.K.	X	Y	RADIO	Z RAS IZ.	Z RAS DR.	AZIMUT	DIST. EJE	PEN(o/oo)	PERAL_I	PERAL_D	HILO BAJO	ZT (eje)	Z TERR.
RECTA Rampa	253180.000	358894.521	4614882.546	0.000	697.156	697.156	33.680000	0.000	0.390	0.00	0.00	697.156	696.677	696.677
RECTA Rampa	253200.000	358904.615	4614899.812	0.000	697.164	697.164	33.680000	0.000	0.390	0.00	0.00	697.164	696.725	696.725
RECTA Rampa	253220.000	358914.709	4614917.078	0.000	697.172	697.172	33.680000	0.000	0.390	0.00	0.00	697.172	696.743	696.743
RECTA Rampa	253240.000	358924.803	4614934.344	0.000	697.180	697.180	33.680000	0.000	0.390	0.00	0.00	697.180	696.656	696.656
CLOT. Rampa	253241.285	358925.452	4614935.453	-1000000.000	697.180	697.180	33.680000	0.000	0.390	0.00	0.00	697.180	696.646	696.646
CLOT. Rampa	253260.000	358934.894	4614951.612	-13224.997	697.188	697.188	33.634956	0.000	0.390	0.00	11.91	697.188	696.497	696.497
CLOT. Rampa	253280.000	358944.958	4614968.895	-6392.944	697.195	697.195	33.487237	0.000	0.390	0.00	24.64	697.195	696.496	696.496
CIRC. Rampa	253296.285	358953.114	4614982.991	-4500.000	697.202	697.202	33.290955	0.000	0.390	0.00	35.00	697.202	696.489	696.489
CIRC. Rampa	253300.000	358954.968	4614986.210	-4500.000	697.203	697.203	33.238404	0.000	0.390	0.00	35.00	697.203	696.487	696.487
CIRC. Rampa	253320.000	358964.904	4615003.567	-4500.000	697.211	697.211	32.955462	0.000	0.390	0.00	35.00	697.211	696.475	696.475
CIRC. Rampa	253340.000	358974.762	4615020.969	-4500.000	697.219	697.219	32.672520	0.000	0.390	0.00	35.00	697.219	696.498	696.498
CIRC. Rampa	253360.000	358984.543	4615038.414	-4500.000	697.227	697.227	32.389578	0.000	0.390	0.00	35.00	697.227	696.831	696.831
CIRC. Rampa	253380.000	358994.246	4615055.902	-4500.000	697.234	697.234	32.106636	0.000	0.390	0.00	35.00	697.234	696.524	696.524
CLOT. Rampa	253389.111	358998.640	4615063.883	-4500.000	697.238	697.238	31.977748	0.000	0.390	0.00	35.00	697.238	696.511	696.511
CLOT. Rampa	253400.000	359003.872	4615073.433	-5610.900	697.242	697.242	31.838944	0.000	0.390	0.00	28.07	697.242	696.495	696.495
CLOT. Rampa	253420.000	359013.436	4615090.998	-10265.208	697.250	697.250	31.663466	0.000	0.390	0.00	15.34	697.250	696.490	696.490
CLOT. Rampa	253440.000	359022.966	4615108.582	-60210.641	697.258	697.258	31.590875	0.000	0.390	0.00	2.62	697.258	696.593	696.593
RECTA Rampa	253444.111	359024.923	4615112.196	0.000	697.259	697.259	31.588702	0.000	0.390	0.00	0.00	697.259	696.602	696.602
RECTA Rampa	253460.000	359032.488	4615126.170	0.000	697.266	697.266	31.588702	0.000	0.390	0.00	0.00	697.266	696.637	696.637
RECTA Rampa	253480.000	359042.010	4615143.758	0.000	697.273	697.273	31.588702	0.000	0.390	0.00	0.00	697.273	696.627	696.627
RECTA Rampa	253500.000	359051.531	4615161.346	0.000	697.281	697.281	31.588702	0.000	0.390	0.00	0.00	697.281	696.557	696.557
RECTA Rampa	253520.000	359061.053	4615178.934	0.000	697.289	697.289	31.588702	0.000	0.390	0.00	0.00	697.289	696.848	696.848
RECTA Rampa	253540.000	359070.575	4615196.522	0.000	697.297	697.297	31.588702	0.000	0.390	0.00	0.00	697.297	696.846	696.846
RECTA Rampa	253560.000	359080.096	4615214.110	0.000	697.305	697.305	31.588702	0.000	0.390	0.00	0.00	697.305	696.850	696.850
RECTA Rampa	253580.000	359089.618	4615231.698	0.000	697.312	697.312	31.588702	0.000	0.390	0.00	0.00	697.312	696.826	696.826
RECTA KV -461214	253600.000	359099.140	4615249.286	0.000	697.320	697.320	31.588702	0.000	0.360	0.00	0.00	697.320	696.802	696.802
RECTA KV -461214	253620.000	359108.661	4615266.874	0.000	697.327	697.327	31.588702	0.000	0.317	0.00	0.00	697.327	696.808	696.808
CLOT. KV -461214	253626.639	359111.822	4615272.712	-1000000.000	697.329	697.329	31.588702	0.000	0.303	0.00	0.00	697.329	696.810	696.810
CLOT. KV -461214	253640.000	359118.181	4615284.463	-17757.547	697.333	697.333	31.564753	0.000	0.274	0.00	8.22	697.333	696.814	696.814
CIRC. KV -461214	253659.139	359127.274	4615301.304	-7300.000	697.338	697.338	31.446989	0.000	0.232	0.00	20.00	697.338	696.814	696.814
CIRC. KV -461214	253660.000	359127.682	4615302.062	-7300.000	697.338	697.338	31.439485	0.000	0.230	0.00	20.00	697.338	696.814	696.814
CIRC. KV -461214	253680.000	359137.138	4615319.685	-7300.000	697.342	697.342	31.265068	0.000	0.187	0.00	20.00	697.342	696.823	696.823
CIRC. KV -461214	253700.000	359146.546	4615337.334	-7300.000	697.345	697.345	31.090652	0.000	0.144	0.00	20.00	697.345	696.824	696.824
CIRC. KV -461214	253720.000	359155.905	4615355.009	-7300.000	697.348	697.348	30.916235	0.000	0.100	0.00	20.00	697.348	696.823	696.823
CIRC. KV -461214	253740.000	359165.216	4615372.710	-7300.000	697.349	697.349	30.741819	0.000	0.057	0.00	20.00	697.349	696.813	696.813
CLOT. KV -461214	253751.479	359170.539	4615382.880	-7300.000	697.350	697.350	30.641713	0.000	0.032	0.00	20.00	697.350	696.823	696.823
CLOT. KV -461214	253760.000	359174.479	4615390.435	-9894.101	697.350	697.350	30.577144	0.000	0.014	0.00	14.76	697.350	696.830	696.830
CLOT. Horizontal	253780.000	359183.707	4615408.179	-59626.530	697.350	697.350	30.502124	0.000	0.000	0.00	2.45	697.350	696.828	696.828
RECTA Horizontal	253783.979	359185.542	4615411.710	0.000	697.350	697.350	30.500000	0.000	0.000	0.00	0.00	697.350	696.857	696.857
RECTA Horizontal	253800.000	359192.927	4615425.927	0.000	697.350	697.350	30.500000	0.000	0.000	0.00	0.00	697.350	696.971	696.971
RECTA Horizontal	253820.000	359202.146	4615443.676	0.000	697.350	697.350	30.500000	0.000	0.000	0.00	0.00	697.350	697.084	697.084
RECTA Horizontal	253840.000	359211.366	4615461.424	0.000	697.350	697.350	30.500000	0.000	0.000	0.00	0.00	697.350	697.084	697.084
RECTA Horizontal	253860.000	359220.585	4615479.172	0.000	697.350	697.350	30.500000	0.000	0.000	0.00	0.00	697.350	697.000	697.000
RECTA Horizontal	253880.000	359229.805	4615496.920	0.000	697.350	697.350	30.500000	0.000	0.000	0.00	0.00	697.350	697.000	697.000
RECTA Horizontal	253900.000	359239.024	4615514.669	0.000	697.350	697.350	30.500000	0.000	0.000	0.00	0.00	697.350	697.000	697.000
RECTA Horizontal	253920.000	359248.244	4615532.417	0.000	697.350	697.350	30.500000	0.000	0.000	0.00	0.00	697.350	696.998	696.998
CLOT. Horizontal	253929.167	359252.469	4615540.552	1000000.000	697.350	697.350	30.500000	0.000	0.000	0.00	0.00	697.350	696.999	696.999
CLOT. Horizontal	253940.000	359257.464	4615550.165	21900.064	697.350	697.350	30.515746	0.000	0.000	6.67	0.00	697.350	697.000	697.000
CLOT. Horizontal	253960.000	359266.701	4615567.904	7694.603	697.350	697.350	30.627551	0.000	0.000	18.97	0.00	697.350	697.062	697.062
CIRC. Horizontal	253961.667	359267.472	4615569.381	7300.000	697.350	697.350	30.641713	0.000	0.000	20.00	0.00	697.350	697.064	697.064

Istram 20.08.08.26 10/02/21 11:48:55 200009 pagina 12

PROYECTO : ESTUDIO INFORMATIVO DE LA INTEGRACION DEL FFCC EN VALLADOLID
GRUPO : 2 : EJES ANCHO 1668 ALTERNATIVA 2
EJE : 77 : VIA 1 - VIA 6 IBERICO

* * * PUNTOS DEL EJE EN PLANTA * * *

TIPO	P.K.	X	Y	RADIO	Z RAS IZ.	Z RAS DR.	AZIMUT	DIST. EJE	PEN(o/oo)	PERAL_I	PERAL_D	HILO BAJO	ZT (eje)	Z TERR.
CIRC. Horizontal	253980.000	359275.980	4615585.621	7300.000	697.350	697.350	30.801595	0.000	0.000	20.00	0.00	697.350	697.090	697.090
CIRC. Horizontal	254000.000	359285.308	4615603.313	7300.000	697.350	697.350	30.976011	0.000	0.000	20.00	0.00	697.350	697.094	697.094
CIRC. KV 133924	254020.000	359294.684	4615620.979	7300.000	697.350	697.350	31.150427	0.000	0.028	20.00	0.00	697.350	697.102	697.102
CIRC. KV 133924	254040.000	359304.109	4615638.619	7300.000	697.352	697.352	31.324844	0.000	0.177	20.00	0.00	697.352	697.117	697.117
CLOT. KV 133924	254053.220	359310.365	4615650.265	7300.000	697.355	697.355	31.440133	0.000	0.276	20.00	0.00	697.355	697.129	697.129
CLOT. KV 133924	254060.000	359313.581	4615656.233	9224.341	697.357	697.357	31.493093	0.000	0.327	15.83	0.00	697.357	697.136	697.136
CLOT. KV 133924	254080.000	359323.091	4615673.828	41477.322	697.365	697.365	31.577457	0.000	0.476	3.52	0.00	697.365	697.170	697.170
RECTA KV 133924	254085.720	359325.813	4615678.859	0.000	697.368	697.368	31.581846	0.000	0.519	0.00	0.00	697.368	697.178	697.178
RECTA KV 133924	254100.000	359332.610	4615691.417	0.000	697.376	697.376	31.581846	0.000	0.625	0.00	0.00	697.376	697.201	697.201
RECTA KV 133924	254120.000	359342.130	4615709.006	0.000	697.390	697.390	31.581846	0.000	0.775	0.00	0.00	697.390	697.220	697.220
RECTA KV 133924	254140.000	359351.650	4615726.595	0.000	697.407	697.407	31.581846	0.000	0.924	0.00	0.00	697.407	697.220	697.220
RECTA KV 133924	254160.000	359361.169	4615744.184	0.000	697.427	697.427	31.581846	0.000	1.073	0.00	0.00	697.427	697.266	697.266
RECTA KV 133924	254180.000	359370.689	4615761.773	0.000	697.450	697.450	31.581846	0.000	1.223	0.00	0.00	697.450	697.266	697.266
RECTA Rampa	254200.000	359380.209	4615779.362	0.000	697.476	697.476	31.581846	0.000	1.344	0.00	0.00	697.476	697.266	697.266
RECTA Rampa	254220.000	359389.729	4615796.951	0.000	697.503	697.503	31.581846	0.000	1.344	0.00	0.00	697.503	697.317	697.317
RECTA Rampa	254240.000	359399.248	4615814.541	0.000	697.530	697.530	31.581846	0.000	1.344	0.00	0.00	697.530	697.376	697.376
RECTA Rampa	254260.000	359408.768	4615832.130	0.000	697.557	697.557	31.581846	0.000	1.344	0.00	0.00	697.557	697.395	697.395
RECTA Rampa	254280.000	359418.288	4615849.719	0.000	697.584	697.584	31.581846	0.000	1.344	0.00	0.00	697.584	697.394	697.394
RECTA Rampa	254300.000	359427.808	4615867.308	0.000	697.610	697.610	31.581846	0.000	1.344	0.00	0.00	697.610	697.421	697.421
RECTA Rampa	254320.000	359437.327	4615884.897	0.000	697.637	697.637	31.581846	0.000	1.344	0.00	0.00	697.637	697.480	697.480
RECTA Rampa	254340.000	359446.847	4615902.486	0.000	697.664	697.664	31.581846	0.000	1.344	0.00	0.00	697.664	697.480	697.480
RECTA Rampa	254360.000	359456.367	4615920.075	0.000	697.691	697.691	31.581846	0.000	1.344	0.00	0.00	697.691	697.493	697.493
RECTA Rampa	254380.000	359465.887	4615937.664	0.000	697.718	697.718	31.581846	0.000	1.344	0.00	0.00	697.718	697.495	697.495
RECTA Rampa	254400.000	359475.406	4615955.253	0.000	697.745	697.745	31.581846	0.000	1.344	0.00	0.00	697.745	697.507	697.507
RECTA Rampa	254420.000	359484.926	4615972.842	0.000	697.772	697.772	31.581846	0.000	1.344	0.00	0.00	697.772	697.526	697.526
RECTA Rampa	254440.000	359494.446	4615990.431	0.000	697.799	697.799	31.581846	0.000	1.344	0.00	0.00	697.799	697.545	697.545
RECTA KV -127500	254460.000	359503.966	4616008.020	0.000	697.825	697.825	31.581846	0.000	1.307	0.00	0.00	697.825	697.569	697.569
RECTA KV -127500	254480.000	359513.485	4616025.609	0.000	697.850	697.850	31.581846	0.000	1.150	0.00	0.00	697.850	697.604	697.604
RECTA KV -127500	254500.000	359523.005	4616043.198	0.000	697.871	697.871	31.581846	0.000	0.993	0.00	0.00	697.871	697.639	697.639
RECTA KV -127500	254520.000	359532.525	4616060.787	0.000	697.890	697.890	31.581846	0.000	0.836	0.00	0.00	697.890	697.674	697.674
RECTA KV -127500	254540.000	359542.045	4616078.376	0.000	697.905	697.905	31.581846	0.000	0.679	0.00	0.00	697.905	697.709	697.709
RECTA KV -127500	254560.000	359551.564	4616095.965	0.000	697.917	697.917	31.581846	0.000	0.522	0.00	0.00	697.917	697.724	697.724
RECTA KV -127500	254580.000	359561.084	4616113.554	0.000	697.926	697.926	31.581846	0.000	0.365	0.00	0.00	697.926	697.713	697.713
RECTA KV -127500	254600.000	359570.604	4616131.143	0.000	697.931	697.931	31.581846	0.000	0.208	0.00	0.00	697.931	697.701	697.701
RECTA KV -127500	254620.000	359580.124	4616148.732	0.000	697.934	697.934	31.581846	0.000	0.052	0.00	0.00	697.934	697.693	697.693
RECTA Pendiente	254640.000	359589.643	4616166.321	0.000	697.934	697.934	31.581846	0.000	-0.068	0.00	0.00	697.934	697.720	697.720
RECTA Pendiente	254660.000	359599.163	4616183.910	0.000	697.932	697.932	31.581846	0.000	-0.068	0.00	0.00	697.932	697.711	697.711
RECTA Pendiente	254680.000	359608.683	4616201.499	0.000	697.931	697.931	31.581846	0.000	-0.068	0.00	0.00	697.931	697.695	697.695
RECTA Pendiente	254700.000	359618.203	4616219.088	0.000	697.930	697.930	31.581846	0.000	-0.068	0.00	0.00	697.930	697.716	697.716
RECTA Pendiente	254720.000	359627.722	4616236.678	0.000	697.928	697.928	31.581846	0.000	-0.068	0.00	0.00	697.928	697.721	697.721
RECTA Pendiente	254740.000	359637.242	4616254.267	0.000	697.927	697.927	31.581846	0.000	-0.068	0.00	0.00	697.927	697.694	697.694
RECTA Pendiente	254760.000	359646.762	4616271.856	0.000	697.925	697.925	31.581846	0.000	-0.068	0.00	0.00	697.925	697.764	697.764
RECTA Pendiente	254780.000	359656.282	4616289.445	0.000	697.924	697.924	31.581846	0.000	-0.068	0.00	0.00	697.924	697.745	697.745
RECTA Pendiente	254800.000	359665.801	4616307.034	0.000	697.923	697.923	31.581846	0.000	-0.068	0.00	0.00	697.923	697.730	697.730
RECTA Pendiente	254820.000	359675.321	4616324.623	0.000	697.921	697.921	31.581846	0.000	-0.068	0.00	0.00	697.921	697.737	697.737
RECTA Pendiente	254840.000	359684.841	4616342.212	0.000	697.920	697.920	31.581846	0.000	-0.068	0.00	0.00	697.920	697.764	697.764
RECTA Pendiente	254860.000	359694.361	4616359.801	0.000	697.919	697.919	31.581846	0.000	-0.068	0.00	0.00	697.919	697.724	697.724
RECTA Pendiente	254880.000	359703.880	4616377.390	0.000	697.917	697.917	31.581846	0.000	-0.068	0.00	0.00	697.917	697.694	697.694
RECTA Pendiente	254900.000	359713.400	4616394.979	0.000	697.916	697.916	31.581846	0.000	-0.068	0.00	0.00	697.916	697.648	697.648
RECTA Pendiente	254920.000	359722.920	4616412.568	0.000	697.915	697.915	31.581846	0.000	-0.068	0.00	0.00	697.915	697.690	697.690

Istram 20.08.08.26 10/02/21 11:48:55 200009 pagina 13

PROYECTO : ESTUDIO INFORMATIVO DE LA INTEGRACION DEL FFCC EN VALLADOLID
GRUPO : 2 : EJES ANCHO 1668 ALTERNATIVA 2
EJE : 77 : VIA 1 - VIA 6 IBERICO

* * * PUNTOS DEL EJE EN PLANTA * * *

TIPO	P.K.	X	Y	RADIO	Z RAS IZ.	Z RAS DR.	AZIMUT	DIST. EJE	PEN(o/oo)	PERAL_I	PERAL_D	HILO BAJO	ZT (eje)	Z TERR.
RECTA Pendiente	254940.000	359732.440	4616430.157	0.000	697.913	697.913	31.581846	0.000	-0.068	0.00	0.00	697.913	697.689	697.689
RECTA Pendiente	254960.000	359741.959	4616447.746	0.000	697.912	697.912	31.581846	0.000	-0.068	0.00	0.00	697.912	697.675	697.675
RECTA Pendiente	254980.000	359751.479	4616465.335	0.000	697.911	697.911	31.581846	0.000	-0.068	0.00	0.00	697.911	697.627	697.627
RECTA Pendiente	255000.000	359760.999	4616482.924	0.000	697.909	697.909	31.581846	0.000	-0.068	0.00	0.00	697.909	697.500	697.500
RECTA Pendiente	255020.000	359770.519	4616500.513	0.000	697.908	697.908	31.581846	0.000	-0.068	0.00	0.00	697.908	697.487	697.487
RECTA Pendiente	255040.000	359780.038	4616518.102	0.000	697.907	697.907	31.581846	0.000	-0.068	0.00	0.00	697.907	697.499	697.499
RECTA KV 2053243	255060.000	359789.558	4616535.691	0.000	697.905	697.905	31.581846	0.000	-0.061	0.00	0.00	697.905	697.510	697.510
RECTA KV 2053243	255080.000	359799.078	4616553.280	0.000	697.904	697.904	31.581846	0.000	-0.051	0.00	0.00	697.904	697.505	697.505
RECTA KV 2053243	255100.000	359808.598	4616570.869	0.000	697.903	697.903	31.581846	0.000	-0.041	0.00	0.00	697.903	697.456	697.456
RECTA KV 2053243	255120.000	359818.117	4616588.458	0.000	697.902	697.902	31.581846	0.000	-0.032	0.00	0.00	697.902	697.400	697.400
RECTA KV 2053243	255140.000	359827.637	4616606.047	0.000	697.902	697.902	31.581846	0.000	-0.022	0.00	0.00	697.902	697.405	697.405
RECTA KV 2053243	255160.000	359837.157	4616623.636	0.000	697.902	697.902	31.581846	0.000	-0.012	0.00	0.00	697.902	697.433	697.433
RECTA KV 2053243	255180.000	359846.677	4616641.225	0.000	697.901	697.901	31.581846	0.000	-0.003	0.00	0.00	697.901	697.433	697.433
RECTA KV 2053243	255200.000	359856.196	4616658.815	0.000	697.901	697.901	31.581846	0.000	0.007	0.00	0.00	697.901	697.433	697.433
RECTA KV 2053243	255220.000	359865.716	4616676.404	0.000	697.902	697.902	31.581846	0.000	0.017	0.00	0.00	697.902	697.433	697.433
RECTA Rampa	255240.000	359875.236	4616693.993	0.000	697.902	697.902	31.581846	0.000	0.020	0.00	0.00	697.902	697.440	697.440
RECTA Rampa	255260.000	359884.756	4616711.582	0.000	697.902	697.902	31.581846	0.000	0.020	0.00	0.00	697.902	697.453	697.453
RECTA Rampa	255280.000	359894.275	4616729.171	0.000	697.903	697.903	31.581846	0.000	0.020	0.00	0.00	697.903	697.456	697.456
RECTA Rampa	255300.000	359903.795	4616746.760	0.000	697.903	697.903	31.581846	0.000	0.020	0.00	0.00	697.903	697.499	697.499
RECTA Rampa	255320.000	359913.315	4616764.349	0.000	697.904	697.904	31.581846	0.000	0.020	0.00	0.00	697.904	697.476	697.476
RECTA Rampa	255340.000	359922.835	4616781.938	0.000	697.904	697.904	31.581846	0.000	0.020	0.00	0.00	697.904	697.455	697.455
RECTA Rampa	255360.000	359932.354	4616799.527	0.000	697.904	697.904	31.581846	0.000	0.020	0.00	0.00	697.904	697.480	697.480
RECTA Rampa	255380.000	359941.874	4616817.116	0.000	697.905	697.905	31.581846	0.000	0.020	0.00	0.00	697.905	697.447	697.447
RECTA Rampa	255400.000	359951.394	4616834.705	0.000	697.905	697.905	31.581846	0.000	0.020	0.00	0.00	697.905	697.401	697.401
RECTA Rampa	255420.000	359960.914	4616852.294	0.000	697.906	697.906	31.581846	0.000	0.020	0.00	0.00	697.906	697.405	697.405
RECTA Rampa	255440.000	359970.433	4616869.883	0.000	697.906	697.906	31.581846	0.000	0.020	0.00	0.00	697.906	697.406	697.406
RECTA Rampa	255460.000	359979.953	4616887.472	0.000	697.906	697.906	31.581846	0.000	0.020	0.00	0.00	697.906	697.405	697.405
RECTA Rampa	255480.000	359989.473	4616905.061	0.000	697.907	697.907	31.581846	0.000	0.020	0.00	0.00	697.907	697.405	697.405
RECTA Rampa	255500.000	359998.993	4616922.650	0.000	697.907	697.907	31.581846	0.000	0.020	0.00	0.00	697.907	697.421	697.421
RECTA Rampa	255520.000	360008.512	4616940.239	0.000	697.908	697.908	31.581846	0.000	0.020	0.00	0.00	697.908	697.437	697.437
CIRC. Rampa	255522.497	360009.701	4616942.436	600000.000	697.908	697.908	31.581846	0.000	0.020	0.00	0.00	697.908	697.432	697.432
CIRC. Rampa	255540.000	360018.032	4616957.828	600000.000	697.908	697.908	31.583703	0.000	0.020	0.00	0.00	697.908	697.397	697.397
CIRC. Rampa	255560.000	360027.553	4616975.417	600000.000	697.908	697.908	31.585825	0.000	0.020	0.00	0.00	697.908	697.344	697.344
CIRC. Rampa	255580.000	360037.074	4616993.005	600000.000	697.909	697.909	31.587948	0.000	0.020	0.00	0.00	697.909	697.292	697.292
CIRC. Rampa	255600.000	360046.596	4617010.593	600000.000	697.909	697.909	31.590070	0.000	0.020	0.00	0.00	697.909	697.240	697.240
CIRC. Rampa	255620.000	360056.118	4617028.181	600000.000	697.910	697.910	31.592192	0.000	0.020	0.00	0.00	697.910	697.203	697.203
CIRC. Rampa	255640.000	360065.641	4617045.768	600000.000	697.910	697.910	31.594314	0.000	0.020	0.00	0.00	697.910	697.165	697.165
RECTA Rampa	255643.546	360067.329	4617048.886	0.000	697.910	697.910	31.594690	0.000	0.020	0.00	0.00	697.910	697.150	697.150
RECTA Rampa	255660.000	360075.164	4617063.355	0.000	697.910	697.910	31.594690	0.000	0.020	0.00	0.00	697.910	697.083	697.083
RECTA Rampa	255680.000	360084.688	4617080.942	0.000	697.911	697.911	31.594690	0.000	0.020	0.00	0.00	697.911	697.102	697.102
RECTA Rampa	255700.000	360094.211	4617098.529	0.000	697.911	697.911	31.594690	0.000	0.020	0.00	0.00	697.911	697.111	697.111
RECTA Rampa	255720.000	360103.734	4617116.116	0.000	697.912	697.912	31.594690	0.000	0.020	0.00	0.00	697.912	697.036	697.036
RECTA Rampa	255740.000	360113.257	4617133.704	0.000	697.912	697.912	31.594690	0.000	0.020	0.00	0.00	697.912	697.117	697.117
RECTA Rampa	255760.000	360122.781	4617151.291	0.000	697.912	697.912	31.594690	0.000	0.020	0.00	0.00	697.912	697.089	697.089
RECTA Rampa	255780.000	360132.304	4617168.878	0.000	697.913	697.913	31.594690	0.000	0.020	0.00	0.00	697.913	697.063	697.063
RECTA Rampa	255800.000	360141.827	4617186.465	0.000	697.913	697.913	31.594690	0.000	0.020	0.00	0.00	697.913	697.038	697.038
RECTA Rampa	255820.000	360151.351	4617204.052	0.000	697.914	697.914	31.594690	0.000	0.020	0.00	0.00	697.914	697.053	697.053
RECTA Rampa	255840.000	360160.874	4617221.639	0.000	697.914	697.914	31.594690	0.000	0.020	0.00	0.00	697.914	697.077	697.077
RECTA Rampa	255860.000	360170.397	4617239.226	0.000	697.914	697.914	31.594690	0.000	0.020	0.00	0.00	697.914	697.074	697.074
RECTA Rampa	255880.000	360179.921	4617256.813	0.000	697.915	697.915	31.594690	0.000	0.020	0.00	0.00	697.915	697.078	697.078

Istram 20.08.08.26 10/02/21 11:48:55 200009 pagina 14

PROYECTO : ESTUDIO INFORMATIVO DE LA INTEGRACION DEL FFCC EN VALLADOLID
GRUPO : 2 : EJES ANCHO 1668 ALTERNATIVA 2
EJE : 77 : VIA 1 - VIA 6 IBERICO

* * * PUNTOS DEL EJE EN PLANTA * * *

TIPO	P.K.	X	Y	RADIO	Z RAS IZ.	Z RAS DR.	AZIMUT	DIST. EJE	PEN(o/oo)	PERAL_I	PERAL_D	HILO BAJO	ZT (eje)	Z TERR.
RECTA Rampa	255900.000	360189.444	4617274.401	0.000	697.915	697.915	31.594690	0.000	0.020	0.00	0.00	697.915	697.060	697.060
RECTA Rampa	255920.000	360198.967	4617291.988	0.000	697.916	697.916	31.594690	0.000	0.020	0.00	0.00	697.916	697.036	697.036
RECTA Rampa	255940.000	360208.490	4617309.575	0.000	697.916	697.916	31.594690	0.000	0.020	0.00	0.00	697.916	697.012	697.012
CLOT. Rampa	255942.338	360209.604	4617311.631	1000000.000	697.916	697.916	31.594690	0.000	0.020	0.00	0.00	697.916	697.014	697.014
CLOT. Rampa	255960.000	360218.017	4617327.160	15259.024	697.916	697.916	31.631533	0.000	0.020	12.62	0.00	697.916	697.028	697.028
CIRC. Rampa	255977.338	360226.293	4617342.396	7700.000	697.917	697.917	31.739376	0.000	0.020	25.00	0.00	697.917	697.061	697.061
CIRC. Rampa	255980.000	360227.566	4617344.733	7700.000	697.917	697.917	31.761382	0.000	0.020	25.00	0.00	697.917	697.066	697.066
CIRC. Rampa	256000.000	360237.158	4617362.283	7700.000	697.917	697.917	31.926738	0.000	0.020	25.00	0.00	697.917	697.031	697.031
CIRC. Rampa	256020.000	360246.796	4617379.808	7700.000	697.918	697.918	32.092094	0.000	0.020	25.00	0.00	697.918	696.984	696.984
CIRC. Rampa	256040.000	360256.479	4617397.307	7700.000	697.918	697.918	32.257450	0.000	0.020	25.00	0.00	697.918	696.997	696.997
CIRC. Rampa	256060.000	360266.208	4617414.782	7700.000	697.918	697.918	32.422806	0.000	0.020	25.00	0.00	697.918	697.109	697.109
CLOT. Rampa	256068.766	360270.486	4617422.432	7700.000	697.919	697.919	32.495277	0.000	0.020	25.00	0.00	697.919	697.102	697.102
CLOT. Rampa	256080.000	360275.981	4617432.231	11339.935	697.919	697.919	32.573254	0.000	0.020	16.98	0.00	697.919	697.093	697.093
CLOT. Rampa	256100.000	360285.784	4617449.664	71569.543	697.919	697.919	32.638289	0.000	0.020	2.69	0.00	697.919	697.018	697.018
RECTA Rampa	256103.766	360287.631	4617452.945	0.000	697.919	697.919	32.639964	0.000	0.020	0.00	0.00	697.919	697.027	697.027
RECTA Rampa	256120.000	360295.595	4617467.092	0.000	697.920	697.920	32.639964	0.000	0.020	0.00	0.00	697.920	697.066	697.066
RECTA Rampa	256140.000	360305.406	4617484.520	0.000	697.920	697.920	32.639964	0.000	0.020	0.00	0.00	697.920	697.063	697.063
RECTA Rampa	256160.000	360315.217	4617501.949	0.000	697.920	697.920	32.639964	0.000	0.020	0.00	0.00	697.920	697.073	697.073
RECTA Rampa	256180.000	360325.027	4617519.377	0.000	697.921	697.921	32.639964	0.000	0.020	0.00	0.00	697.921	697.080	697.080
RECTA Rampa	256200.000	360334.838	4617536.806	0.000	697.921	697.921	32.639964	0.000	0.020	0.00	0.00	697.921	696.920	696.920
RECTA Rampa	256220.000	360344.649	4617554.234	0.000	697.922	697.922	32.639964	0.000	0.020	0.00	0.00	697.922	696.876	696.876
CLOT. Rampa	256234.725	360351.872	4617567.065	-1000000.000	697.922	697.922	32.639964	0.000	0.020	0.00	0.00	697.922	696.991	696.991
CLOT. Rampa	256240.000	360354.460	4617571.662	-49760.361	697.922	697.922	32.636589	0.000	0.020	0.00	3.77	697.922	696.929	696.929
CLOT. Rampa	256260.000	360364.261	4617589.096	-10385.640	697.922	697.922	32.562497	0.000	0.020	0.00	18.05	697.922	696.783	696.783
CIRC. Rampa	256269.725	360369.017	4617597.578	-7500.000	697.923	697.923	32.491419	0.000	0.020	0.00	25.00	697.923	696.889	696.889
CIRC. Rampa	256280.000	360374.030	4617606.548	-7500.000	697.923	697.923	32.404200	0.000	0.020	0.00	25.00	697.923	697.000	697.000
CIRC. Rampa	256300.000	360383.753	4617624.025	-7500.000	697.923	697.923	32.234435	0.000	0.020	0.00	25.00	697.923	697.000	697.000
CIRC. Rampa	256320.000	360393.429	4617641.529	-7500.000	697.924	697.924	32.064669	0.000	0.020	0.00	25.00	697.924	697.000	697.000
CIRC. Rampa	256340.000	360403.059	4617659.058	-7500.000	697.924	697.924	31.894904	0.000	0.020	0.00	25.00	697.924	697.053	697.053
CLOT. Rampa	256359.457	360412.382	4617676.136	-7500.000	697.924	697.924	31.729747	0.000	0.020	0.00	25.00	697.924	696.992	696.992
CLOT. Rampa	256360.000	360412.642	4617676.613	-7618.157	697.924	697.924	31.725175	0.000	0.020	0.00	24.61	697.924	696.991	696.991
CLOT. Rampa	256380.000	360422.182	4617694.190	-18157.103	697.925	697.925	31.606547	0.000	0.020	0.00	10.33	697.925	696.995	696.995
RECTA Rampa	256394.457	360429.065	4617706.904	0.000	697.925	697.925	31.581202	0.000	0.020	0.00	0.00	697.925	696.999	696.999
RECTA Rampa	256400.000	360431.704	4617711.779	0.000	697.925	697.925	31.581202	0.000	0.020	0.00	0.00	697.925	697.000	697.000
RECTA Rampa	256420.000	360441.223	4617729.368	0.000	697.926	697.926	31.581202	0.000	0.020	0.00	0.00	697.926	697.068	697.068
RECTA Rampa	256440.000	360450.743	4617746.957	0.000	697.926	697.926	31.581202	0.000	0.020	0.00	0.00	697.926	697.023	697.023
RECTA KV 61313424	256460.000	360460.262	4617764.546	0.000	697.926	697.926	31.581202	0.000	0.020	0.00	0.00	697.926	696.688	696.688
RECTA KV 61313424	256480.000	360469.782	4617782.135	0.000	697.927	697.927	31.581202	0.000	0.021	0.00	0.00	697.927	696.671	696.671
RECTA KV 61313424	256500.000	360479.301	4617799.724	0.000	697.927	697.927	31.581202	0.000	0.021	0.00	0.00	697.927	696.797	696.797
RECTA KV 61313424	256520.000	360488.821	4617817.313	0.000	697.928	697.928	31.581202	0.000	0.021	0.00	0.00	697.928	696.956	696.956
RECTA KV 61313424	256540.000	360498.341	4617834.903	0.000	697.928	697.928	31.581202	0.000	0.022	0.00	0.00	697.928	697.264	697.264
RECTA KV 61313424	256560.000	360507.860	4617852.492	0.000	697.929	697.929	31.581202	0.000	0.022	0.00	0.00	697.929	701.265	701.265
RECTA KV 61313424	256580.000	360517.380	4617870.081	0.000	697.929	697.929	31.581202	0.000	0.022	0.00	0.00	697.929	700.573	700.573
RECTA KV 61313424	256600.000	360526.899	4617887.670	0.000	697.929	697.929	31.581202	0.000	0.022	0.00	0.00	697.929	697.000	697.000
RECTA KV 61313424	256620.000	360536.419	4617905.259	0.000	697.930	697.930	31.581202	0.000	0.023	0.00	0.00	697.930	697.000	697.000
RECTA Rampa	256640.000	360545.938	4617922.848	0.000	697.930	697.930	31.581202	0.000	0.023	0.00	0.00	697.930	697.000	697.000
RECTA Rampa	256660.000	360555.458	4617940.437	0.000	697.931	697.931	31.581202	0.000	0.023	0.00	0.00	697.931	697.000	697.000
RECTA Rampa	256680.000	360564.978	4617958.027	0.000	697.931	697.931	31.581202	0.000	0.023	0.00	0.00	697.931	697.000	697.000
RECTA Rampa	256700.000	360574.497	4617975.616	0.000	697.932	697.932	31.581202	0.000	0.023	0.00	0.00	697.932	697.000	697.000
RECTA Rampa	256720.000	360584.017	4617993.205	0.000	697.932	697.932	31.581202	0.000	0.023	0.00	0.00	697.932	697.000	697.000

Istram 20.08.08.26 10/02/21 11:48:55 200009 pagina 15
PROYECTO : ESTUDIO INFORMATIVO DE LA INTEGRACION DEL FFCC EN VALLADOLID
GRUPO : 2 : EJES ANCHO 1668 ALTERNATIVA 2
EJE : 77 : VIA 1 - VIA 6 IBERICO

* * * PUNTOS DEL EJE EN PLANTA * * *

TIPO	P.K.	X	Y	RADIO	Z RAS IZ.	Z RAS DR.	AZIMUT	DIST. EJE	PEN(o/oo)	PERAL_I	PERAL_D	HILO BAJO	ZT (eje)	Z TERR.
RECTA Rampa	256740.000	360593.536	4618010.794	0.000	697.933	697.933	31.581202	0.000	0.023	0.00	0.00	697.933	697.220	697.220
RECTA Rampa	256760.000	360603.056	4618028.383	0.000	697.933	697.933	31.581202	0.000	0.023	0.00	0.00	697.933	696.955	696.955
CLOT. Rampa	256761.315	360603.682	4618029.539	-1000000.000	697.933	697.933	31.581202	0.000	0.023	0.00	0.00	697.933	696.942	696.942
CIRC. Rampa	256776.315	360610.819	4618042.732	-17000.000	697.933	697.933	31.553116	0.000	0.023	0.00	10.00	697.933	696.796	696.796
CIRC. Rampa	256780.000	360612.572	4618045.974	-17000.000	697.934	697.934	31.539315	0.000	0.023	0.00	10.00	697.934	696.760	696.760
CIRC. Rampa	256800.000	360622.069	4618063.575	-17000.000	697.934	697.934	31.464418	0.000	0.023	0.00	10.00	697.934	697.000	697.000
CIRC. Rampa	256820.000	360631.546	4618081.187	-17000.000	697.935	697.935	31.389522	0.000	0.023	0.00	10.00	697.935	697.122	697.122
CIRC. Rampa	256840.000	360641.003	4618098.811	-17000.000	697.935	697.935	31.314625	0.000	0.023	0.00	10.00	697.935	697.367	697.367
CIRC. Rampa	256860.000	360650.438	4618116.445	-17000.000	697.935	697.935	31.239729	0.000	0.023	0.00	10.00	697.935	697.440	697.440
CIRC. Rampa	256880.000	360659.853	4618134.091	-17000.000	697.936	697.936	31.164832	0.000	0.023	0.00	10.00	697.936	697.023	697.023
CLOT. Rampa	256881.484	360660.550	4618135.400	-17000.000	697.936	697.936	31.159275	0.000	0.023	0.00	10.00	697.936	697.041	697.041
CLOT. Rampa	256896.484	360667.599	4618148.641	1000000.000	697.936	697.936	31.131189	0.000	0.023	0.00	0.00	697.936	697.222	697.222
CLOT. Rampa	256900.000	360669.250	4618151.745	68259.786	697.936	697.936	31.132828	0.000	0.023	0.88	0.00	697.936	697.264	697.264
CLOT. Rampa	256920.000	360678.653	4618169.397	10205.826	697.937	697.937	31.204533	0.000	0.023	5.88	0.00	697.937	697.488	697.488
CIRC. Rampa	256936.484	360686.428	4618183.932	6000.000	697.937	697.937	31.343395	0.000	0.023	10.00	0.00	697.937	697.498	697.498
CIRC. Rampa	256940.000	360688.091	4618187.030	6000.000	697.937	697.937	31.380701	0.000	0.023	10.00	0.00	697.937	697.500	697.500
CIRC. KV 10572	256960.000	360697.584	4618204.633	6000.000	697.947	697.947	31.592908	0.000	1.384	10.00	0.00	697.947	697.500	697.500
CIRC. KV 10572	256980.000	360707.136	4618222.205	6000.000	697.994	697.994	31.805114	0.000	3.276	10.00	0.00	697.994	697.616	697.616
CIRC. KV 10572	257000.000	360716.747	4618239.744	6000.000	698.079	698.079	32.017321	0.000	5.168	10.00	0.00	698.079	697.500	697.500
CIRC. KV 10572	257020.000	360726.416	4618257.252	6000.000	698.201	698.201	32.229527	0.000	7.059	10.00	0.00	698.201	697.500	697.500
CLOT. KV 10572	257033.983	360733.211	4618269.473	6000.000	698.309	698.309	32.377893	0.000	8.382	10.00	0.00	698.309	697.384	697.384
CLOT. KV 10572	257040.000	360736.144	4618274.726	2805.174	698.361	698.361	32.478088	0.000	8.951	13.76	0.00	698.361	697.334	697.334
CLOT. KV 10572	257060.000	360746.009	4618292.124	1012.723	698.559	698.559	33.333655	0.000	10.843	26.26	0.00	698.559	697.482	697.482
CIRC. KV 10572	257073.983	360753.097	4618304.178	700.000	698.720	698.720	34.409013	0.000	12.166	35.00	0.00	698.720	697.495	697.495
CIRC. KV 10572	257080.000	360756.215	4618309.323	700.000	698.795	698.795	34.956221	0.000	12.735	35.00	0.00	698.795	697.500	697.500
CIRC. KV 10572	257092.062	360762.599	4618319.558	700.000	698.955	698.955	36.053207	0.000	13.876	35.00	0.00	698.955	697.500	697.500

Istram 20.08.08.26 10/02/21 11:54:06 200009 pagina 1
PROYECTO : ESTUDIO INFORMATIVO DE LA INTEGRACION DEL FFCC EN VALLADOLID
GRUPO : 2 : EJES ANCHO 1668 ALTERNATIVA 2
EJE : 78 : VIA 8 TRES HERMANOS

* * * PUNTOS DEL EJE EN PLANTA * * *

TIPO	P.K.	X	Y	RADIO	Z RAS IZ.	Z RAS DR.	AZIMUT	DIST. EJE	PEN(o/oo)	PERAL_I	PERAL_D	HILO BAJO	ZT (eje)	Z TERR.
RECTA Rampa	0.000	358916.516	4614916.206	0.000	697.172	697.172	36.352233	0.000	0.391	0.00	0.00	697.172	696.265	696.265
CLOT. Rampa	13.468	358923.796	4614927.538	-1000000.000	697.177	697.177	36.352233	0.000	0.391	0.00	0.00	697.177	696.196	696.196
CLOT. Rampa	20.000	358927.325	4614933.034	-10678.318	697.180	697.180	36.332761	0.000	0.391	0.00	5.81	697.180	696.177	696.177
CLOT. Rampa	40.000	358938.098	4614949.884	-2628.908	697.188	697.188	36.030982	0.000	0.391	0.00	23.58	697.188	696.000	696.000
CIRC. Rampa	58.468	358947.934	4614965.515	-1550.000	697.195	697.195	35.428107	0.000	0.391	0.00	40.00	697.195	696.280	696.280
CIRC. Rampa	60.000	358948.742	4614966.816	-1550.000	697.195	697.195	35.365187	0.000	0.391	0.00	40.00	697.195	696.331	696.331
CIRC. Rampa	80.000	358959.180	4614983.877	-1550.000	697.203	697.203	34.543742	0.000	0.391	0.00	40.00	697.203	696.370	696.370
CIRC. Rampa	100.000	358969.397	4615001.070	-1550.000	697.211	697.211	33.722298	0.000	0.391	0.00	40.00	697.211	696.437	696.437
CIRC. Rampa	120.000	358979.391	4615018.394	-1550.000	697.219	697.219	32.900853	0.000	0.391	0.00	40.00	697.219	696.449	696.449
CLOT. Rampa	129.447	358984.034	4615026.622	-1550.000	697.223	697.223	32.512829	0.000	0.391	0.00	40.00	697.223	696.483	696.483
CLOT. Rampa	140.000	358989.163	4615035.844	-2024.829	697.227	697.227	32.130227	0.000	0.391	0.00	30.62	697.227	696.656	696.656
CLOT. Rampa	160.000	358998.764	4615053.389	-4827.872	697.235	697.235	31.683957	0.000	0.391	0.00	12.84	697.235	696.533	696.533
RECTA Rampa	174.447	359005.649	4615066.090	0.000	697.240	697.240	31.588703	0.000	0.391	0.00	0.00	697.240	696.451	696.451
RECTA Rampa	180.000	359008.292	4615070.973	0.000	697.242	697.242	31.588703	0.000	0.391	0.00	0.00	697.242	696.430	696.430
RECTA Rampa	200.000	359017.814	4615088.561	0.000	697.250	697.250	31.588703	0.000	0.391	0.00	0.00	697.250	696.419	696.419
RECTA Rampa	220.000	359027.335	4615106.149	0.000	697.258	697.258	31.588703	0.000	0.391	0.00	0.00	697.258	696.403	696.403
RECTA Rampa	240.000	359036.857	4615123.737	0.000	697.266	697.266	31.588703	0.000	0.391	0.00	0.00	697.266	696.439	696.439
RECTA Rampa	260.000	359046.379	4615141.325	0.000	697.274	697.274	31.588703	0.000	0.391	0.00	0.00	697.274	696.500	696.500
RECTA Rampa	280.000	359055.900	4615158.913	0.000	697.281	697.281	31.588703	0.000	0.391	0.00	0.00	697.281	696.500	696.500
RECTA Rampa	300.000	359065.422	4615176.501	0.000	697.289	697.289	31.588703	0.000	0.391	0.00	0.00	697.289	696.500	696.500
RECTA Rampa	320.000	359074.944	4615194.089	0.000	697.297	697.297	31.588703	0.000	0.391	0.00	0.00	697.297	696.500	696.500
RECTA Rampa	340.000	359084.465	4615211.677	0.000	697.305	697.305	31.588703	0.000	0.391	0.00	0.00	697.305	696.632	696.632
RECTA Rampa	360.000	359093.987	4615229.265	0.000	697.313	697.313	31.588703	0.000	0.391	0.00	0.00	697.313	696.556	696.556
RECTA KV -466953	380.000	359103.508	4615246.853	0.000	697.320	697.320	31.588703	0.000	0.357	0.00	0.00	697.320	696.539	696.539
RECTA KV -466953	400.000	359113.030	4615264.441	0.000	697.327	697.327	31.588703	0.000	0.314	0.00	0.00	697.327	696.651	696.651
RECTA KV -466953	420.000	359122.552	4615282.029	0.000	697.333	697.333	31.588703	0.000	0.271	0.00	0.00	697.333	696.695	696.695
CLOT. KV -466953	434.576	359129.491	4615294.847	-1000000.000	697.336	697.336	31.588703	0.000	0.240	0.00	0.00	697.336	696.689	696.689
CLOT. KV -466953	440.000	359132.073	4615299.618	-10888.892	697.338	697.338	31.572847	0.000	0.229	0.00	5.79	697.338	696.682	696.682
CLOT. KV -466953	460.000	359141.554	4615317.227	-2323.091	697.342	697.342	31.240342	0.000	0.186	0.00	27.12	697.342	696.760	696.760
CIRC. KV -466953	472.076	359147.213	4615327.895	-1575.000	697.344	697.344	30.830822	0.000	0.160	0.00	40.00	697.344	696.761	696.761
CIRC. KV -466953	480.000	359150.885	4615334.917	-1575.000	697.345	697.345	30.510528	0.000	0.143	0.00	40.00	697.345	696.762	696.762
CIRC. KV -466953	500.000	359159.994	4615352.722	-1575.000	697.348	697.348	29.702122	0.000	0.100	0.00	40.00	697.348	696.797	696.797
CIRC. KV -466953	520.000	359168.877	4615370.641	-1575.000	697.349	697.349	28.893716	0.000	0.057	0.00	40.00	697.349	696.786	696.786
CLOT. KV -466953	527.622	359172.202	4615377.499	-1575.000	697.350	697.350	28.585648	0.000	0.041	0.00	40.00	697.350	696.783	696.783
CLOT. KV -466953	540.000	359177.536	4615388.669	-2351.065	697.350	697.350	28.167888	0.000	0.015	0.00	26.80	697.350	696.784	696.784
CLOT. Horizontal	560.000	359186.043	4615406.770	-11532.044	697.350	697.350	27.841904	0.000	0.000	0.00	5.46	697.350	696.847	696.847
RECTA Horizontal	565.122	359188.211	4615411.410	0.000	697.350	697.350	27.827767	0.000	0.000	0.00	0.00	697.350	696.909	696.909
RECTA Horizontal	577.216	359193.331	4615422.367	0.000	697.350	697.350	27.827767	0.000	0.000	0.00	0.00	697.350	697.000	697.000

Istram 20.08.08.26 10/02/21 11:54:35 200009 pagina 1
PROYECTO : ESTUDIO INFORMATIVO DE LA INTEGRACION DEL FFCC EN VALLADOLID
GRUPO : 2 : EJES ANCHO 1668 ALTERNATIVA 2
EJE : 83 : VIA 10 TRES HERMANOS

* * * PUNTOS DEL EJE EN PLANTA * * *

TIPO	P.K.	X	Y	RADIO	Z RAS IZ.	Z RAS DR.	AZIMUT	DIST. EJE	PEN(o/oo)	PERAL_I	PERAL_D	HILO BAJO	ZT (eje)	Z TERR.
RECTA Rampa	0.000	358873.562	4614842.619	0.000	697.139	697.139	38.192428	0.000	0.392	0.00	0.00	697.139	696.665	696.665
RECTA Rampa	20.000	358884.854	4614859.127	0.000	697.147	697.147	38.192428	0.000	0.392	0.00	0.00	697.147	696.394	696.394
RECTA Rampa	40.000	358896.146	4614875.634	0.000	697.154	697.154	38.192428	0.000	0.392	0.00	0.00	697.154	696.143	696.143
RECTA Rampa	60.000	358907.437	4614892.142	0.000	697.162	697.162	38.192428	0.000	0.392	0.00	0.00	697.162	695.978	695.978
CLOT. Rampa	70.312	358913.259	4614900.653	-1000000.000	697.166	697.166	38.192428	0.000	0.392	0.00	0.00	697.166	696.000	696.000
CLOT. Rampa	80.000	358918.724	4614908.653	-2477.245	697.170	697.170	38.067941	0.000	0.392	0.00	9.69	697.170	696.000	696.000
CIRC. Rampa	90.312	358924.505	4614917.192	-1200.000	697.174	697.174	37.661912	0.000	0.392	0.00	20.00	697.174	696.000	696.000
CIRC. Rampa	100.000	358929.875	4614925.255	-1200.000	697.178	697.178	37.147938	0.000	0.392	0.00	20.00	697.178	696.000	696.000
CIRC. Rampa	120.000	358940.755	4614942.037	-1200.000	697.186	697.186	36.086905	0.000	0.392	0.00	20.00	697.186	696.000	696.000
CIRC. Rampa	140.000	358951.353	4614958.998	-1200.000	697.194	697.194	35.025872	0.000	0.392	0.00	20.00	697.194	696.023	696.023
CIRC. Rampa	160.000	358961.668	4614976.133	-1200.000	697.201	697.201	33.964839	0.000	0.392	0.00	20.00	697.201	696.195	696.195
CIRC. Rampa	180.000	358971.695	4614993.437	-1200.000	697.209	697.209	32.903806	0.000	0.392	0.00	20.00	697.209	696.327	696.327
CLOT. Rampa	194.789	358978.924	4615006.339	-1200.000	697.215	697.215	32.119210	0.000	0.392	0.00	20.00	697.215	696.382	696.382
CLOT. Rampa	200.000	358981.434	4615010.906	-1622.797	697.217	697.217	31.878784	0.000	0.392	0.00	14.79	697.217	696.381	696.381
RECTA Rampa	214.789	358988.494	4615023.901	0.000	697.223	697.223	31.588694	0.000	0.392	0.00	0.00	697.223	696.438	696.438
RECTA Rampa	220.000	358990.975	4615028.483	0.000	697.225	697.225	31.588694	0.000	0.392	0.00	0.00	697.225	696.473	696.473
RECTA Rampa	240.000	359000.497	4615046.071	0.000	697.233	697.233	31.588694	0.000	0.392	0.00	0.00	697.233	696.639	696.639
RECTA Rampa	260.000	359010.018	4615063.659	0.000	697.241	697.241	31.588694	0.000	0.392	0.00	0.00	697.241	696.429	696.429
RECTA Rampa	280.000	359019.540	4615081.247	0.000	697.248	697.248	31.588694	0.000	0.392	0.00	0.00	697.248	696.355	696.355
RECTA Rampa	300.000	359029.061	4615098.835	0.000	697.256	697.256	31.588694	0.000	0.392	0.00	0.00	697.256	696.318	696.318
RECTA Rampa	320.000	359038.583	4615116.423	0.000	697.264	697.264	31.588694	0.000	0.392	0.00	0.00	697.264	696.345	696.345
RECTA Rampa	340.000	359048.105	4615134.011	0.000	697.272	697.272	31.588694	0.000	0.392	0.00	0.00	697.272	696.500	696.500
RECTA Rampa	360.000	359057.626	4615151.599	0.000	697.280	697.280	31.588694	0.000	0.392	0.00	0.00	697.280	696.500	696.500
RECTA Rampa	380.000	359067.148	4615169.187	0.000	697.288	697.288	31.588694	0.000	0.392	0.00	0.00	697.288	696.500	696.500
RECTA Rampa	400.000	359076.670	4615186.775	0.000	697.295	697.295	31.588694	0.000	0.392	0.00	0.00	697.295	696.500	696.500
RECTA Rampa	420.000	359086.191	4615204.363	0.000	697.303	697.303	31.588694	0.000	0.392	0.00	0.00	697.303	696.500	696.500
RECTA Rampa	440.000	359095.713	4615221.951	0.000	697.311	697.311	31.588694	0.000	0.392	0.00	0.00	697.311	696.500	696.500
RECTA KV -483376	460.000	359105.235	4615239.539	0.000	697.319	697.319	31.588694	0.000	0.360	0.00	0.00	697.319	696.500	696.500
RECTA KV -483376	480.000	359114.756	4615257.127	0.000	697.325	697.325	31.588694	0.000	0.318	0.00	0.00	697.325	696.500	696.500
RECTA KV -483376	500.000	359124.278	4615274.715	0.000	697.331	697.331	31.588694	0.000	0.277	0.00	0.00	697.331	696.629	696.629
RECTA KV -483376	520.000	359133.800	4615292.303	0.000	697.337	697.337	31.588694	0.000	0.236	0.00	0.00	697.337	696.566	696.566
RECTA KV -483376	540.000	359143.321	4615309.891	0.000	697.341	697.341	31.588694	0.000	0.194	0.00	0.00	697.341	696.697	696.697
RECTA KV -483376	560.000	359152.843	4615327.479	0.000	697.344	697.344	31.588694	0.000	0.153	0.00	0.00	697.344	696.697	696.697
CLOT. KV -483376	560.743	359153.197	4615328.133	-1000000.000	697.344	697.344	31.588694	0.000	0.151	0.00	0.00	697.344	696.700	696.700
CLOT. KV -483376	580.000	359162.321	4615345.091	-1246.306	697.347	697.347	31.096867	0.000	0.112	0.00	19.26	697.347	696.821	696.821
CIRC. KV -483376	580.743	359162.669	4615345.747	-1200.000	697.347	697.347	31.058177	0.000	0.110	0.00	20.00	697.347	696.824	696.824
CIRC. KV -483376	600.000	359171.559	4615362.829	-1200.000	697.349	697.349	30.036566	0.000	0.070	0.00	20.00	697.349	696.863	696.863
CIRC. KV -483376	620.000	359180.500	4615380.719	-1200.000	697.350	697.350	28.975533	0.000	0.029	0.00	20.00	697.350	696.849	696.849
CIRC. Horizontal	640.000	359189.142	4615398.755	-1200.000	697.350	697.350	27.914500	0.000	0.000	0.00	20.00	697.350	696.646	696.646
CIRC. Horizontal	660.000	359197.482	4615416.933	-1200.000	697.350	697.350	26.853467	0.000	0.000	0.00	20.00	697.350	697.000	697.000
CLOT. Horizontal	666.322	359200.055	4615422.708	-1200.000	697.350	697.350	26.518088	0.000	0.000	0.00	20.00	697.350	697.000	697.000
CLOT. Horizontal	680.000	359205.534	4615435.240	-3796.420	697.350	697.350	26.040576	0.000	0.000	0.00	6.32	697.350	697.689	697.689
RECTA Horizontal	686.322	359208.045	4615441.042	0.000	697.350	697.350	25.987572	0.000	0.000	0.00	0.00	697.350	697.565	697.565
RECTA Horizontal	700.000	359213.475	4615453.596	0.000	697.350	697.350	25.987572	0.000	0.000	0.00	0.00	697.350	697.438	697.438
RECTA Horizontal	720.000	359221.414	4615471.953	0.000	697.350	697.350	25.987572	0.000	0.000	0.00	0.00	697.350	697.000	697.000
RECTA Horizontal	740.000	359229.354	4615490.310	0.000	697.350	697.350	25.987572	0.000	0.000	0.00	0.00	697.350	697.000	697.000
RECTA Horizontal	748.311	359232.653	4615497.938	0.000	697.350	697.350	25.987572	0.000	0.000	0.00	0.00	697.350	697.000	697.000

PUNTOS DEL EJE CADA 20 M ANCHO 1.435 MM

Istram 20.08.08.26 11/02/21 08:49:04 200009 pagina 1
PROYECTO : ESTUDIO INFORMATIVO DE LA INTEGRACION DEL FFCC EN VALLADOLID
GRUPO : 1 : EJES ANCHO 1435 ALTERNATIVA 2
EJE : 2 : VIA 2 UIC

* * * PUNTOS DEL EJE EN PLANTA * * *

TIPO	P.K.	X	Y	RADIO	Z RAS IZ.	Z RAS DR.	AZIMUT	DIST. EJE	PEN(o/oo)	PERAL_I	PERAL_D	HILO BAJO	ZT (eje)	Z TERR.
RECTA KV 130000	174876.679	354437.426	4607545.024	0.000	691.848	691.848	20.405639	0.000	-4.600	0.00	0.00	691.848	691.632	691.632
RECTA KV 130000	174880.000	354438.472	4607548.176	0.000	691.833	691.833	20.405639	0.000	-4.574	0.00	0.00	691.833	691.628	691.628
RECTA KV 130000	174900.000	354444.773	4607567.158	0.000	691.743	691.743	20.405639	0.000	-4.420	0.00	0.00	691.743	691.500	691.500
RECTA KV 130000	174920.000	354451.075	4607586.139	0.000	691.656	691.656	20.405639	0.000	-4.267	0.00	0.00	691.656	691.500	691.500
RECTA KV 130000	174940.000	354457.376	4607605.120	0.000	691.573	691.573	20.405639	0.000	-4.113	0.00	0.00	691.573	691.500	691.500
RECTA KV 130000	174960.000	354463.678	4607624.102	0.000	691.492	691.492	20.405639	0.000	-3.959	0.00	0.00	691.492	691.000	691.000
RECTA KV 130000	174980.000	354469.979	4607643.083	0.000	691.414	691.414	20.405639	0.000	-3.805	0.00	0.00	691.414	691.000	691.000
RECTA KV 130000	175000.000	354476.280	4607662.064	0.000	691.340	691.340	20.405639	0.000	-3.651	0.00	0.00	691.340	691.000	691.000
RECTA KV 130000	175020.000	354482.582	4607681.046	0.000	691.268	691.268	20.405639	0.000	-3.497	0.00	0.00	691.268	691.000	691.000
RECTA KV 130000	175040.000	354488.883	4607700.027	0.000	691.200	691.200	20.405639	0.000	-3.343	0.00	0.00	691.200	691.000	691.000
RECTA KV 130000	175060.000	354495.185	4607719.008	0.000	691.135	691.135	20.405639	0.000	-3.190	0.00	0.00	691.135	690.851	690.851
RECTA KV 130000	175080.000	354501.486	4607737.990	0.000	691.072	691.072	20.405639	0.000	-3.036	0.00	0.00	691.072	690.677	690.677
RECTA KV 130000	175100.000	354507.787	4607756.971	0.000	691.013	691.013	20.405639	0.000	-2.882	0.00	0.00	691.013	690.500	690.500
RECTA KV 130000	175120.000	354514.089	4607775.953	0.000	690.957	690.957	20.405639	0.000	-2.728	0.00	0.00	690.957	690.500	690.500
RECTA KV 130000	175140.000	354520.390	4607794.934	0.000	690.904	690.904	20.405639	0.000	-2.574	0.00	0.00	690.904	690.500	690.500
RECTA KV 130000	175160.000	354526.692	4607813.915	0.000	690.854	690.854	20.405639	0.000	-2.420	0.00	0.00	690.854	690.500	690.500
RECTA KV 130000	175180.000	354532.993	4607832.897	0.000	690.807	690.807	20.405639	0.000	-2.267	0.00	0.00	690.807	690.500	690.500
RECTA KV 130000	175200.000	354539.294	4607851.878	0.000	690.763	690.763	20.405639	0.000	-2.113	0.00	0.00	690.763	690.500	690.500
RECTA KV 130000	175220.000	354545.596	4607870.859	0.000	690.723	690.723	20.405639	0.000	-1.959	0.00	0.00	690.723	690.500	690.500
RECTA KV 130000	175240.000	354551.897	4607889.841	0.000	690.685	690.685	20.405639	0.000	-1.805	0.00	0.00	690.685	690.500	690.500
RECTA KV 130000	175260.000	354558.199	4607908.822	0.000	690.650	690.650	20.405639	0.000	-1.651	0.00	0.00	690.650	690.500	690.500
RECTA KV 130000	175280.000	354564.500	4607927.803	0.000	690.619	690.619	20.405639	0.000	-1.497	0.00	0.00	690.619	690.500	690.500
RECTA KV 130000	175300.000	354570.802	4607946.785	0.000	690.591	690.591	20.405639	0.000	-1.343	0.00	0.00	690.591	690.500	690.500
RECTA KV 130000	175320.000	354577.103	4607965.766	0.000	690.565	690.565	20.405639	0.000	-1.190	0.00	0.00	690.565	690.500	690.500
RECTA KV 130000	175340.000	354583.404	4607984.748	0.000	690.543	690.543	20.405639	0.000	-1.036	0.00	0.00	690.543	690.323	690.323
RECTA KV 130000	175360.000	354589.706	4608003.729	0.000	690.524	690.524	20.405639	0.000	-0.882	0.00	0.00	690.524	690.243	690.243
RECTA Pendiente	175380.000	354596.007	4608022.710	0.000	690.508	690.508	20.405639	0.000	-0.734	0.00	0.00	690.508	690.039	690.039
RECTA Pendiente	175400.000	354602.309	4608041.692	0.000	690.493	690.493	20.405639	0.000	-0.734	0.00	0.00	690.493	690.000	690.000
RECTA Pendiente	175420.000	354608.610	4608060.673	0.000	690.478	690.478	20.405639	0.000	-0.734	0.00	0.00	690.478	690.000	690.000
RECTA Pendiente	175440.000	354614.911	4608079.654	0.000	690.464	690.464	20.405639	0.000	-0.734	0.00	0.00	690.464	690.000	690.000
RECTA Pendiente	175460.000	354621.213	4608098.636	0.000	690.449	690.449	20.405639	0.000	-0.734	0.00	0.00	690.449	690.000	690.000
RECTA Pendiente	175480.000	354627.514	4608117.617	0.000	690.434	690.434	20.405639	0.000	-0.734	0.00	0.00	690.434	690.000	690.000
RECTA Pendiente	175500.000	354633.816	4608136.598	0.000	690.420	690.420	20.405639	0.000	-0.734	0.00	0.00	690.420	690.000	690.000
RECTA Pendiente	175520.000	354640.117	4608155.580	0.000	690.405	690.405	20.405639	0.000	-0.734	0.00	0.00	690.405	690.000	690.000
RECTA Pendiente	175540.000	354646.418	4608174.561	0.000	690.390	690.390	20.405639	0.000	-0.734	0.00	0.00	690.390	690.000	690.000
RECTA Pendiente	175560.000	354652.720	4608193.543	0.000	690.376	690.376	20.405639	0.000	-0.734	0.00	0.00	690.376	690.000	690.000
RECTA Pendiente	175580.000	354659.021	4608212.524	0.000	690.361	690.361	20.405639	0.000	-0.734	0.00	0.00	690.361	690.000	690.000
RECTA Pendiente	175600.000	354665.323	4608231.505	0.000	690.346	690.346	20.405639	0.000	-0.734	0.00	0.00	690.346	690.000	690.000
RECTA Pendiente	175620.000	354671.624	4608250.487	0.000	690.331	690.331	20.405639	0.000	-0.734	0.00	0.00	690.331	690.000	690.000
RECTA Pendiente	175640.000	354677.926	4608269.468	0.000	690.317	690.317	20.405639	0.000	-0.734	0.00	0.00	690.317	690.000	690.000
RECTA Pendiente	175660.000	354684.227	4608288.449	0.000	690.302	690.302	20.405639	0.000	-0.734	0.00	0.00	690.302	690.000	690.000
RECTA Pendiente	175680.000	354690.528	4608307.431	0.000	690.287	690.287	20.405639	0.000	-0.734	0.00	0.00	690.287	690.000	690.000
RECTA Pendiente	175700.000	354696.830	4608326.412	0.000	690.273	690.273	20.405639	0.000	-0.734	0.00	0.00	690.273	690.000	690.000
RECTA Pendiente	175720.000	354703.131	4608345.393	0.000	690.258	690.258	20.405639	0.000	-0.734	0.00	0.00	690.258	690.000	690.000
RECTA Pendiente	175740.000	354709.433	4608364.375	0.000	690.243	690.243	20.405639	0.000	-0.734	0.00	0.00	690.243	690.000	690.000
RECTA Pendiente	175760.000	354715.734	4608383.356	0.000	690.229	690.229	20.405639	0.000	-0.734	0.00	0.00	690.229	690.000	690.000
RECTA Pendiente	175780.000	354722.035	4608402.338	0.000	690.214	690.214	20.405639	0.000	-0.734	0.00	0.00	690.214	690.000	690.000
RECTA Pendiente	175800.000	354728.337	4608421.319	0.000	690.199	690.199	20.405639	0.000	-0.734	0.00	0.00	690.199	690.000	690.000
RECTA Pendiente	175820.000	354734.638	4608440.300	0.000	690.185	690.185	20.405639	0.000	-0.734	0.00	0.00	690.185	690.000	690.000
RECTA Pendiente	175840.000	354740.940	4608459.282	0.000	690.170	690.170	20.405639	0.000	-0.734	0.00	0.00	690.170	690.000	690.000

Istram 20.08.08.26 11/02/21 08:49:04 200009 pagina 2
PROYECTO : ESTUDIO INFORMATIVO DE LA INTEGRACION DEL FFCC EN VALLADOLID
GRUPO : 1 : EJES ANCHO 1435 ALTERNATIVA 2
EJE : 2 : VIA 2 UIC

* * * PUNTOS DEL EJE EN PLANTA * * *

TIPO	P.K.	X	Y	RADIO	Z RAS IZ.	Z RAS DR.	AZIMUT	DIST. EJE	PEN(o/oo)	PERAL_I	PERAL_D	HILO BAJO	ZT (eje)	Z TERR.
RECTA Pendiente	175860.000	354747.241	4608478.263	0.000	690.155	690.155	20.405639	0.000	-0.734	0.00	0.00	690.155	690.000	690.000
RECTA Pendiente	175880.000	354753.542	4608497.244	0.000	690.141	690.141	20.405639	0.000	-0.734	0.00	0.00	690.141	689.671	689.671
RECTA Pendiente	175900.000	354759.844	4608516.226	0.000	690.126	690.126	20.405639	0.000	-0.734	0.00	0.00	690.126	689.668	689.668
RECTA Pendiente	175920.000	354766.145	4608535.207	0.000	690.111	690.111	20.405639	0.000	-0.734	0.00	0.00	690.111	689.642	689.642
RECTA Pendiente	175940.000	354772.447	4608554.189	0.000	690.097	690.097	20.405639	0.000	-0.734	0.00	0.00	690.097	689.653	689.653
RECTA Pendiente	175960.000	354778.748	4608573.170	0.000	690.082	690.082	20.405639	0.000	-0.734	0.00	0.00	690.082	689.673	689.673
RECTA Pendiente	175980.000	354785.050	4608592.151	0.000	690.067	690.067	20.405639	0.000	-0.734	0.00	0.00	690.067	689.653	689.653
RECTA Pendiente	176000.000	354791.351	4608611.133	0.000	690.053	690.053	20.405639	0.000	-0.734	0.00	0.00	690.053	689.650	689.650
RECTA Pendiente	176020.000	354797.652	4608630.114	0.000	690.038	690.038	20.405639	0.000	-0.734	0.00	0.00	690.038	689.652	689.652
RECTA Pendiente	176040.000	354803.954	4608649.095	0.000	690.023	690.023	20.405639	0.000	-0.734	0.00	0.00	690.023	689.652	689.652
RECTA Pendiente	176060.000	354810.255	4608668.077	0.000	690.008	690.008	20.405639	0.000	-0.734	0.00	0.00	690.008	689.500	689.500
RECTA Pendiente	176080.000	354816.557	4608687.058	0.000	689.994	689.994	20.405639	0.000	-0.734	0.00	0.00	689.994	689.500	689.500
RECTA Pendiente	176100.000	354822.858	4608706.039	0.000	689.979	689.979	20.405639	0.000	-0.734	0.00	0.00	689.979	689.500	689.500
RECTA Pendiente	176120.000	354829.159	4608725.021	0.000	689.964	689.964	20.405639	0.000	-0.734	0.00	0.00	689.964	689.500	689.500
RECTA Pendiente	176140.000	354835.461	4608744.002	0.000	689.950	689.950	20.405639	0.000	-0.734	0.00	0.00	689.950	689.500	689.500
RECTA Pendiente	176160.000	354841.762	4608762.984	0.000	689.935	689.935	20.405639	0.000	-0.734	0.00	0.00	689.935	689.500	689.500
RECTA Pendiente	176180.000	354848.064	4608781.965	0.000	689.920	689.920	20.405639	0.000	-0.734	0.00	0.00	689.920	689.500	689.500
RECTA Pendiente	176200.000	354854.365	4608800.946	0.000	689.906	689.906	20.405639	0.000	-0.734	0.00	0.00	689.906	689.500	689.500
RECTA Pendiente	176220.000	354860.666	4608819.928	0.000	689.891	689.891	20.405639	0.000	-0.734	0.00	0.00	689.891	689.500	689.500
RECTA Pendiente	176240.000	354866.968	4608838.909	0.000	689.876	689.876	20.405639	0.000	-0.734	0.00	0.00	689.876	689.500	689.500
RECTA Pendiente	176260.000	354873.269	4608857.890	0.000	689.862	689.862	20.405639	0.000	-0.734	0.00	0.00	689.862	689.500	689.500
RECTA Pendiente	176280.000	354879.571	4608876.872	0.000	689.847	689.847	20.405639	0.000	-0.734	0.00	0.00	689.847	689.500	689.500
RECTA KV 247018	176300.000	354885.872	4608895.853	0.000	689.832	689.832	20.405639	0.000	-0.722	0.00	0.00	689.832	689.500	689.500
RECTA KV 247018	176320.000	354892.174	4608914.834	0.000	689.819	689.819	20.405639	0.000	-0.641	0.00	0.00	689.819	689.500	689.500
RECTA KV 247018	176340.000	354898.475	4608933.816	0.000	689.807	689.807	20.405639	0.000	-0.560	0.00	0.00	689.807	689.500	689.500
RECTA KV 247018	176360.000	354904.776	4608952.797	0.000	689.796	689.796	20.405639	0.000	-0.479	0.00	0.00	689.796	689.500	689.500
RECTA KV 247018	176380.000	354911.078	4608971.779	0.000	689.788	689.788	20.405639	0.000	-0.398	0.00	0.00	689.788	689.500	689.500
RECTA KV 247018	176400.000	354917.379	4608990.760	0.000	689.780	689.780	20.405639	0.000	-0.317	0.00	0.00	689.780	689.500	689.500
RECTA KV 247018	176420.000	354923.681	4609009.741	0.000	689.775	689.775	20.405639	0.000	-0.236	0.00	0.00	689.775	689.500	689.500
RECTA KV 247018	176440.000	354929.982	4609028.723	0.000	689.771	689.771	20.405639	0.000	-0.155	0.00	0.00	689.771	689.500	689.500
RECTA KV 247018	176460.000	354936.283	4609047.704	0.000	689.769	689.769	20.405639	0.000	-0.074	0.00	0.00	689.769	689.500	689.500
RECTA KV 247018	176480.000	354942.585	4609066.685	0.000	689.768	689.768	20.405639	0.000	0.007	0.00	0.00	689.768	689.500	689.500
RECTA KV 247018	176500.000	354948.886	4609085.667	0.000	689.769	689.769	20.405639	0.000	0.088	0.00	0.00	689.769	689.500	689.500
RECTA Rampa	176520.000	354955.188	4609104.648	0.000	689.771	689.771	20.405639	0.000	0.088	0.00	0.00	689.771	689.500	689.500
RECTA Rampa	176540.000	354961.489	4609123.629	0.000	689.772	689.772	20.405639	0.000	0.088	0.00	0.00	689.772	689.500	689.500
RECTA Rampa	176560.000	354967.790	4609142.611	0.000	689.774	689.774	20.405639	0.000	0.088	0.00	0.00	689.774	689.500	689.500
RECTA Rampa	176580.000	354974.092	4609161.592	0.000	689.776	689.776	20.405639	0.000	0.088	0.00	0.00	689.776	689.500	689.500
RECTA Rampa	176600.000	354980.393	4609180.574	0.000	689.778	689.778	20.405639	0.000	0.088	0.00	0.00	689.778	689.514	689.514
RECTA Rampa	176620.000	354986.695	4609199.555	0.000	689.779	689.779	20.405639	0.000	0.088	0.00	0.00	689.779	689.500	689.500
RECTA Rampa	176640.000	354992.996	4609218.536	0.000	689.781	689.781	20.405639	0.000	0.088	0.00	0.00	689.781	689.500	689.500
RECTA Rampa	176660.000	354999.298	4609237.518	0.000	689.783	689.783	20.405639	0.000	0.088	0.00	0.00	689.783	689.500	689.500
RECTA Rampa	176680.000	355005.599	4609256.499	0.000	689.785	689.785	20.405639	0.000	0.088	0.00	0.00	689.785	689.500	689.500
RECTA Rampa	176700.000	355011.900	4609275.480	0.000	689.786	689.786	20.405639	0.000	0.088	0.00	0.00	689.786	689.500	689.500
RECTA Rampa	176720.000	355018.202	4609294.462	0.000	689.788	689.788	20.405639	0.000	0.088	0.00	0.00	689.788	689.500	689.500
RECTA Rampa	176740.000	355024.503	4609313.443	0.000	689.790	689.790	20.405639	0.000	0.088	0.00	0.00	689.790	689.500	689.500
RECTA Rampa	176760.000	355030.805	4609332.424	0.000	689.792	689.792	20.405639	0.000	0.088	0.00	0.00	689.792	689.500	689.500
RECTA Rampa	176780.000	355037.106	4609351.406	0.000	689.793	689.793	20.405639	0.000	0.088	0.00	0.00	689.793	689.500	689.500
RECTA Rampa	176800.000	355043.407	4609370.387	0.000	689.795	689.795	20.405639	0.000	0.088	0.00	0.00	689.795	689.500	689.500
RECTA Rampa	176820.000	355049.709	4609389.369	0.000	689.797	689.797	20.405639	0.000	0.088	0.00	0.00	689.797	689.500	689.500
RECTA Rampa	176840.000	355056.010	4609408.350	0.000	689.799	689.799	20.405639	0.000	0.088	0.00	0.00	689.799	689.500	689.500

Istram 20.08.08.26 11/02/21 08:49:04 200009 pagina 3

PROYECTO : ESTUDIO INFORMATIVO DE LA INTEGRACION DEL FFCC EN VALLADOLID
GRUPO : 1 : EJES ANCHO 1435 ALTERNATIVA 2
EJE : 2 : VIA 2 UIC

* * * PUNTOS DEL EJE EN PLANTA * * *

TIPO	P.K.	X	Y	RADIO	Z RAS IZ.	Z RAS DR.	AZIMUT	DIST. EJE	PEN(o/oo)	PERAL_I	PERAL_D	HILO BAJO	ZT (eje)	Z TERR.
RECTA Rampa	176860.000	355062.312	4609427.331	0.000	689.800	689.800	20.405639	0.000	0.088	0.00	0.00	689.800	689.500	689.500
CLOT. Rampa	176861.973	355062.933	4609429.204	-1000000.000	689.801	689.801	20.405639	0.000	0.088	0.00	0.00	689.801	689.500	689.500
CLOT. Rampa	176880.000	355068.612	4609446.313	-33283.233	689.802	689.802	20.388399	0.000	0.088	0.00	4.51	689.802	689.500	689.500
CLOT. Rampa	176900.000	355074.900	4609465.299	-15778.223	689.804	689.804	20.328924	0.000	0.088	0.00	9.51	689.804	689.500	689.500
CIRC. Rampa	176901.973	355075.519	4609467.172	-15000.000	689.804	689.804	20.320757	0.000	0.088	0.00	10.00	689.804	689.500	689.500
CIRC. Rampa	176920.000	355081.166	4609484.292	-15000.000	689.806	689.806	20.244247	0.000	0.088	0.00	10.00	689.806	689.500	689.500
CIRC. Rampa	176940.000	355087.407	4609503.293	-15000.000	689.807	689.807	20.159365	0.000	0.088	0.00	10.00	689.807	689.500	689.500
CIRC. Rampa	176960.000	355093.622	4609522.303	-15000.000	689.809	689.809	20.074482	0.000	0.088	0.00	10.00	689.809	689.522	689.522
CIRC. Rampa	176980.000	355099.812	4609541.321	-15000.000	689.811	689.811	19.989600	0.000	0.088	0.00	10.00	689.811	689.655	689.655
CLOT. Rampa	176990.296	355102.988	4609551.115	-15000.000	689.812	689.812	19.945903	0.000	0.088	0.00	10.00	689.812	689.724	689.724
CLOT. Rampa	177000.000	355105.976	4609560.347	-19804.722	689.813	689.813	19.909713	0.000	0.088	0.00	7.57	689.813	689.789	689.789
CLOT. Rampa	177020.000	355112.122	4609579.380	-58276.161	689.815	689.815	19.866644	0.000	0.088	0.00	2.57	689.815	689.860	689.860
CLOT. Rampa	177030.296	355115.283	4609589.178	1000000.000	689.815	689.815	19.861020	0.000	0.088	0.00	0.00	689.815	689.848	689.848
CLOT. Rampa	177040.000	355118.262	4609598.414	61828.932	689.816	689.816	19.866016	0.000	0.088	2.43	0.00	689.816	689.843	689.843
CLOT. Rampa	177060.000	355124.407	4609617.446	20199.167	689.818	689.818	19.907830	0.000	0.088	7.43	0.00	689.818	689.802	689.802
CIRC. Rampa	177070.296	355127.577	4609627.242	15000.000	689.819	689.819	19.945903	0.000	0.088	10.00	0.00	689.819	689.819	689.819
CIRC. Rampa	177080.000	355130.571	4609636.473	15000.000	689.820	689.820	19.987089	0.000	0.088	10.00	0.00	689.820	689.839	689.839
CIRC. Rampa	177100.000	355136.760	4609655.491	15000.000	689.822	689.822	20.071971	0.000	0.088	10.00	0.00	689.822	689.867	689.867
CIRC. KV 227126	177120.000	355142.975	4609674.501	15000.000	689.823	689.823	20.156854	0.000	0.103	10.00	0.00	689.823	689.858	689.858
CIRC. KV 227126	177140.000	355149.215	4609693.503	15000.000	689.826	689.826	20.241737	0.000	0.191	10.00	0.00	689.826	689.855	689.855
CLOT. KV 227126	177154.495	355153.753	4609707.269	15000.000	689.829	689.829	20.303253	0.000	0.255	10.00	0.00	689.829	689.852	689.852
CLOT. KV 227126	177160.000	355155.480	4609712.496	17394.069	689.831	689.831	20.325011	0.000	0.279	8.62	0.00	689.831	689.865	689.865
CLOT. KV 227126	177180.000	355161.766	4609731.483	41394.964	689.837	689.837	20.376990	0.000	0.367	3.62	0.00	689.837	689.880	689.880
RECTA KV 227126	177194.495	355166.328	4609745.240	0.000	689.843	689.843	20.388136	0.000	0.431	0.00	0.00	689.843	689.885	689.885
RECTA KV 227126	177200.000	355168.061	4609750.466	0.000	689.846	689.846	20.388136	0.000	0.455	0.00	0.00	689.846	689.890	689.890
RECTA KV 227126	177220.000	355174.358	4609769.449	0.000	689.856	689.856	20.388136	0.000	0.543	0.00	0.00	689.856	689.895	689.895
RECTA KV 227126	177240.000	355180.654	4609788.432	0.000	689.867	689.867	20.388136	0.000	0.631	0.00	0.00	689.867	689.867	689.867
RECTA KV 227126	177260.000	355186.950	4609807.415	0.000	689.881	689.881	20.388136	0.000	0.720	0.00	0.00	689.881	689.881	689.881
RECTA Rampa	177280.000	355193.246	4609826.398	0.000	689.896	689.896	20.388136	0.000	0.792	0.00	0.00	689.896	689.945	689.945
RECTA Rampa	177300.000	355199.542	4609845.381	0.000	689.912	689.912	20.388136	0.000	0.792	0.00	0.00	689.912	689.946	689.946
RECTA Rampa	177320.000	355205.839	4609864.364	0.000	689.928	689.928	20.388136	0.000	0.792	0.00	0.00	689.928	689.890	689.890
RECTA Rampa	177340.000	355212.135	4609883.348	0.000	689.944	689.944	20.388136	0.000	0.792	0.00	0.00	689.944	689.851	689.851
RECTA Rampa	177360.000	355218.431	4609902.331	0.000	689.960	689.960	20.388136	0.000	0.792	0.00	0.00	689.960	689.846	689.846
RECTA Rampa	177380.000	355224.727	4609921.314	0.000	689.975	689.975	20.388136	0.000	0.792	0.00	0.00	689.975	689.862	689.862
RECTA Rampa	177400.000	355231.023	4609940.297	0.000	689.991	689.991	20.388136	0.000	0.792	0.00	0.00	689.991	689.884	689.884
RECTA Rampa	177420.000	355237.320	4609959.280	0.000	690.007	690.007	20.388136	0.000	0.792	0.00	0.00	690.007	689.896	689.896
RECTA Rampa	177440.000	355243.616	4609978.263	0.000	690.023	690.023	20.388136	0.000	0.792	0.00	0.00	690.023	689.914	689.914
RECTA Rampa	177460.000	355249.912	4609997.246	0.000	690.039	690.039	20.388136	0.000	0.792	0.00	0.00	690.039	689.931	689.931
RECTA Rampa	177480.000	355256.208	4610016.229	0.000	690.055	690.055	20.388136	0.000	0.792	0.00	0.00	690.055	689.943	689.943
RECTA Rampa	177500.000	355262.504	4610035.212	0.000	690.070	690.070	20.388136	0.000	0.792	0.00	0.00	690.070	696.665	696.665
RECTA Rampa	177520.000	355268.801	4610054.195	0.000	690.086	690.086	20.388136	0.000	0.792	0.00	0.00	690.086	690.126	690.126
RECTA Rampa	177540.000	355275.097	4610073.179	0.000	690.102	690.102	20.388136	0.000	0.792	0.00	0.00	690.102	690.086	690.086
RECTA Rampa	177560.000	355281.393	4610092.162	0.000	690.118	690.118	20.388136	0.000	0.792	0.00	0.00	690.118	690.078	690.078
RECTA Rampa	177580.000	355287.689	4610111.145	0.000	690.134	690.134	20.388136	0.000	0.792	0.00	0.00	690.134	690.089	690.089
CLOT. Rampa	177591.449	355291.293	4610122.011	1000000.000	690.143	690.143	20.388136	0.000	0.792	0.00	0.00	690.143	690.054	690.054
CLOT. Rampa	177600.000	355293.986	4610130.128	46776.563	690.150	690.150	20.393955	0.000	0.792	3.21	0.00	690.150	690.026	690.026
CLOT. Rampa	177620.000	355300.291	4610149.108	14009.874	690.165	690.165	20.453006	0.000	0.792	10.71	0.00	690.165	690.007	690.007
CIRC. Rampa	177631.449	355303.911	4610159.969	10000.000	690.175	690.175	20.515460	0.000	0.792	15.00	0.00	690.175	690.015	690.015
CIRC. Rampa	177640.000	355306.623	4610168.079	10000.000	690.181	690.181	20.569899	0.000	0.792	15.00	0.00	690.181	690.003	690.003
CIRC. Rampa	177660.000	355312.992	4610187.038	10000.000	690.197	690.197	20.697223	0.000	0.792	15.00	0.00	690.197	690.019	690.019

Istram 20.08.08.26 11/02/21 08:49:04 200009 pagina 4

PROYECTO : ESTUDIO INFORMATIVO DE LA INTEGRACION DEL FFCC EN VALLADOLID
GRUPO : 1 : EJES ANCHO 1435 ALTERNATIVA 2
EJE : 2 : VIA 2 UIC

* * * PUNTOS DEL EJE EN PLANTA * * *

TIPO	P.K.	X	Y	RADIO	Z RAS IZ.	Z RAS DR.	AZIMUT	DIST. EJE	PEN(o/oo)	PERAL_I	PERAL_D	HILO BAJO	ZT (eje)	Z TERR.
CIRC. Rampa	177680.000	355319.399	4610205.984	10000.000	690.213	690.213	20.824547	0.000	0.792	15.00	0.00	690.213	690.086	690.086
CIRC. Rampa	177700.000	355325.844	4610224.917	10000.000	690.229	690.229	20.951871	0.000	0.792	15.00	0.00	690.229	690.102	690.102
CLOT. Rampa	177719.054	355332.020	4610242.942	10000.000	690.244	690.244	21.073173	0.000	0.792	15.00	0.00	690.244	690.110	690.110
CLOT. Rampa	177720.000	355332.327	4610243.837	10242.212	690.245	690.245	21.079124	0.000	0.792	14.65	0.00	690.245	690.110	690.110
CLOT. Rampa	177740.000	355338.845	4610262.745	20992.897	690.261	690.261	21.171606	0.000	0.792	7.15	0.00	690.261	690.172	690.172
CLOT. Rampa	177759.054	355345.070	4610280.753	-1000000.000	690.276	690.276	21.200497	0.000	0.792	0.00	0.00	690.276	690.177	690.177
CLOT. Rampa	177760.000	355345.380	4610281.647	-117316.865	690.276	690.276	21.200240	0.000	0.792	0.00	0.76	690.276	690.176	690.176
CLOT. Rampa	177780.000	355351.905	4610300.553	-5298.127	690.292	690.292	21.074654	0.000	0.792	0.00	16.82	690.292	690.199	690.199
CIRC. Rampa	177796.409	355357.208	4610316.082	-2970.800	690.305	690.305	20.800252	0.000	0.792	0.00	30.00	690.305	690.195	690.195
CLOT. Rampa	177796.409	355357.208	4610316.082	-2970.800	690.305	690.305	20.800252	0.000	0.792	0.00	30.00	690.305	690.195	690.195
CLOT. Rampa	177800.000	355358.358	4610319.483	-3286.753	690.308	690.308	20.727000	0.000	0.792	0.00	27.12	690.308	690.164	690.164
CLOT. Rampa	177820.000	355364.709	4610338.448	-8062.588	690.324	690.324	20.454347	0.000	0.792	0.00	11.05	690.324	690.084	690.084
RECTA Rampa	177833.764	355369.048	4610351.510	0.000	690.335	690.335	20.400007	0.000	0.792	0.00	0.00	690.335	690.113	690.113
RECTA Rampa	177840.000	355371.012	4610357.429	0.000	690.340	690.340	20.400007	0.000	0.792	0.00	0.00	690.340	690.116	690.116
RECTA Rampa	177860.000	355377.312	4610376.411	0.000	690.356	690.356	20.400007	0.000	0.792	0.00	0.00	690.356	690.139	690.139
RECTA Rampa	177880.000	355383.612	4610395.393	0.000	690.371	690.371	20.400007	0.000	0.792	0.00	0.00	690.371	690.217	690.217
RECTA Rampa	177900.000	355389.912	4610414.375	0.000	690.387	690.387	20.400007	0.000	0.792	0.00	0.00	690.387	690.257	690.257
RECTA Rampa	177920.000	355396.211	4610433.356	0.000	690.403	690.403	20.400007	0.000	0.792	0.00	0.00	690.403	690.299	690.299
RECTA KV -339135	177940.000	355402.511	4610452.338	0.000	690.419	690.419	20.400007	0.000	0.774	0.00	0.00	690.419	690.339	690.339
RECTA KV -339135	177960.000	355408.811	4610471.320	0.000	690.434	690.434	20.400007	0.000	0.715	0.00	0.00	690.434	690.329	690.329
RECTA KV -339135	177980.000	355415.111	4610490.302	0.000	690.448	690.448	20.400007	0.000	0.656	0.00	0.00	690.448	690.311	690.311
RECTA KV -339135	178000.000	355421.410	4610509.284	0.000	690.460	690.460	20.400007	0.000	0.597	0.00	0.00	690.460	690.346	690.346
RECTA KV -339135	178020.000	355427.710	4610528.266	0.000	690.471	690.471	20.400007	0.000	0.538	0.00	0.00	690.471	690.434	690.434
RECTA KV -339135	178040.000	355434.010	4610547.248	0.000	690.482	690.482	20.400007	0.000	0.479	0.00	0.00	690.482	690.427	690.427
RECTA KV -339135	178060.000	355440.310	4610566.230	0.000	690.491	690.491	20.400007	0.000	0.420	0.00	0.00	690.491	690.486	690.486
RECTA Rampa	178080.000	355446.609	4610585.212	0.000	690.499	690.499	20.400007	0.000	0.400	0.00	0.00	690.499	690.479	690.479
RECTA Rampa	178100.000	355452.909	4610604.194	0.000	690.507	690.507	20.400007	0.000	0.400	0.00	0.00	690.507	690.503	690.503
RECTA Rampa	178120.000	355459.209	4610623.176	0.000	690.515	690.515	20.400007	0.000	0.400	0.00	0.00	690.515	690.462	690.462
RECTA Rampa	178140.000	355465.508	4610642.158	0.000	690.523	690.523	20.400007	0.000	0.400	0.00	0.00	690.523	690.438	690.438
RECTA Rampa	178160.000	355471.808	4610661.140	0.000	690.531	690.531	20.400007	0.000	0.400	0.00	0.00	690.531	690.421	690.421
RECTA Rampa	178180.000	355478.108	4610680.121	0.000	690.539	690.539	20.400007	0.000	0.400	0.00	0.00	690.539	690.467	690.467
RECTA Rampa	178200.000	355484.408	4610699.103	0.000	690.547	690.547	20.400007	0.000	0.400	0.00	0.00	690.547	690.505	690.505
RECTA KV 42592	178220.000	355490.707	4610718.085	0.000	690.556	690.556	20.400007	0.000	0.634	0.00	0.00	690.556	690.545	690.545
RECTA KV 42592	178240.000	355497.007	4610737.067	0.000	690.573	690.573	20.400007	0.000	1.103	0.00	0.00	690.573	690.535	690.535
RECTA KV 42592	178260.000	355503.307	4610756.049	0.000	690.600	690.600	20.400007	0.000	1.573	0.00	0.00	690.600	690.565	690.565
RECTA KV 42592	178280.000	355509.607	4610775.031	0.000	690.636	690.636	20.400007	0.000	2.042	0.00	0.00	690.636	690.574	690.574
RECTA KV 42592	178300.000	355515.906	4610794.013	0.000	690.682	690.682	20.400007	0.000	2.512	0.00	0.00	690.682	690.587	690.587
RECTA KV 42592	178320.000	355522.206	4610812.995	0.000	690.737	690.737	20.400007	0.000	2.981	0.00	0.00	690.737	690.618	690.618
RECTA KV 42592	178340.000	355528.506	4610831.977	0.000	690.801	690.801	20.400007	0.000	3.451	0.00	0.00	690.801	690.670	690.670
RECTA Rampa	178360.000	355534.805	4610850.959	0.000	690.871	690.871	20.400007	0.000	3.523	0.00	0.00	690.871	690.775	690.775
RECTA Rampa	178380.000	355541.105	4610869.941	0.000	690.942	690.942	20.400007	0.000	3.523	0.00	0.00	690.942	690.927	690.927
RECTA Rampa	178400.000	355547.405	4610888.923	0.000	691.012	691.012	20.400007	0.000	3.523	0.00	0.00	691.012	690.945	690.945
RECTA Rampa	178420.000	355553.705	4610907.905	0.000	691.083	691.083	20.400007	0.000	3.523	0.00	0.00	691.083	690.910	690.910
RECTA Rampa	178440.000	355560.004	4610926.886	0.000	691.153	691.153	20.400007	0.000	3.523	0.00	0.00	691.153	690.972	690.972
RECTA Rampa	178460.000	355566.304	4610945.868	0.000	691.224	691.224	20.400007	0.000	3.523	0.00	0.00	691.224	691.104	691.104
CLOT. Rampa	178475.541	355571.199	4610960.618	1000000.000	691.278	691.278	20.400007	0.000	3.523	0.00	0.00	691.278	691.134	691.134
CLOT. Rampa	178480.000	355572.604	4610964.850	19436.271	691.294	691.294	20.407310	0.000	3.523	1.74	0.00	691.294	691.141	691.141
CLOT. Rampa	178500.000	355578.930	4610983.823	3543.369	691.364	691.364	20.619729	0.000	3.523	9.54	0.00	691.364	691.273	691.273
CLOT. Rampa	178520.000	355585.364	4611002.760	1949.377	691.435	691.435	21.125970	0.000	3.523	17.34	0.00	691.435	691.272	691.272
CLOT. Rampa	178540.000	355591.991	4611021.630	1344.535	691.505	691.505	21.926033	0.000	3.523	25.15	0.00	691.505	691.364	691.364

Istram 20.08.08.26 11/02/21 08:49:04 200009 pagina 5

PROYECTO : ESTUDIO INFORMATIVO DE LA INTEGRACION DEL FFCC EN VALLADOLID
GRUPO : 1 : EJES ANCHO 1435 ALTERNATIVA 2
EJE : 2 : VIA 2 UIC

* * * PUNTOS DEL EJE EN PLANTA * * *

TIPO	P.K.	X	Y	RADIO	Z RAS IZ.	Z RAS DR.	AZIMUT	DIST. EJE	PEN(o/oo)	PERAL_I	PERAL_D	HILO BAJO	ZT (eje)	Z TERR.
CLOT. Rampa	178560.000	355598.898	4611040.399	1026.148	691.576	691.576	23.019917	0.000	3.523	32.95	0.00	691.576	691.457	691.457
CLOT. Rampa	178580.000	355606.169	4611059.030	829.679	691.646	691.646	24.407624	0.000	3.523	40.75	0.00	691.646	691.493	691.493
CLOT. Rampa	178600.000	355613.888	4611077.480	696.353	691.717	691.717	26.089152	0.000	3.523	48.55	0.00	691.717	691.602	691.602
CLOT. Rampa	178620.000	355622.133	4611095.701	599.945	691.787	691.787	28.064502	0.000	3.523	56.36	0.00	691.787	691.655	691.655
CLOT. KV -64060	178640.000	355630.980	4611113.636	526.985	691.857	691.857	30.333673	0.000	3.458	64.16	0.00	691.857	691.698	691.698
CIRC. KV -64060	178654.977	355638.043	4611126.842	483.000	691.908	691.908	32.225303	0.000	3.225	70.00	0.00	691.908	691.766	691.766
CIRC. KV -64060	178660.000	355640.501	4611131.223	483.000	691.924	691.924	32.887399	0.000	3.146	70.00	0.00	691.924	691.791	691.791
CIRC. KV -64060	178680.000	355650.737	4611148.404	483.000	691.983	691.983	35.523506	0.000	2.834	70.00	0.00	691.983	691.936	691.936
CIRC. KV -64060	178700.000	355661.675	4611165.146	483.000	692.037	692.037	38.159612	0.000	2.522	70.00	0.00	692.037	691.910	691.910
CIRC. KV -64060	178720.000	355673.297	4611181.421	483.000	692.084	692.084	40.795719	0.000	2.210	70.00	0.00	692.084	691.972	691.972
CIRC. KV -64060	178740.000	355685.582	4611197.201	483.000	692.125	692.125	43.431826	0.000	1.897	70.00	0.00	692.125	692.033	692.033
CIRC. KV -64060	178760.000	355698.511	4611212.459	483.000	692.160	692.160	46.067933	0.000	1.585	70.00	0.00	692.160	692.033	692.033
CIRC. KV -64060	178780.000	355712.059	4611227.169	483.000	692.189	692.189	48.704039	0.000	1.273	70.00	0.00	692.189	692.102	692.102
CIRC. KV -64060	178800.000	355726.205	4611241.305	483.000	692.211	692.211	51.340146	0.000	0.961	70.00	0.00	692.211	692.088	692.088
CIRC. KV -64060	178820.000	355740.924	4611254.843	483.000	692.227	692.227	53.976253	0.000	0.649	70.00	0.00	692.227	692.141	692.141
CIRC. KV -64060	178840.000	355756.191	4611267.761	483.000	692.237	692.237	56.612359	0.000	0.336	70.00	0.00	692.237	692.091	692.091
CIRC. KV -64060	178860.000	355771.980	4611280.035	483.000	692.241	692.241	59.248466	0.000	0.024	70.00	0.00	692.241	692.096	692.096
CIRC. Pendiente	178880.000	355788.263	4611291.646	483.000	692.238	692.238	61.884573	0.000	-0.180	70.00	0.00	692.238	692.132	692.132
CIRC. Pendiente	178900.000	355805.013	4611302.572	483.000	692.235	692.235	64.520680	0.000	-0.180	70.00	0.00	692.235	692.174	692.174
CIRC. Pendiente	178920.000	355822.201	4611312.796	483.000	692.231	692.231	67.156786	0.000	-0.180	70.00	0.00	692.231	692.200	692.200
CIRC. Pendiente	178940.000	355839.797	4611322.299	483.000	692.228	692.228	69.792893	0.000	-0.180	70.00	0.00	692.228	692.166	692.166
CLOT. KV -59996	178950.945	355849.589	4611327.189	483.000	692.225	692.225	71.235523	0.000	-0.353	70.00	0.00	692.225	692.154	692.154
CLOT. KV -59996	178960.000	355857.769	4611331.072	629.858	692.221	692.221	72.289864	0.000	-0.504	53.68	0.00	692.221	692.129	692.129
CLOT. KV -59996	178980.000	355876.006	4611339.281	1917.855	692.207	692.207	73.632543	0.000	-0.838	17.63	0.00	692.207	692.057	692.057
RECTA Pendiente	178989.780	355884.966	4611343.202	0.000	692.198	692.198	73.794871	0.000	-1.001	0.00	0.00	692.198	692.045	692.045
RECTA Pendiente	179000.000	355894.332	4611347.291	0.000	692.188	692.188	73.794871	0.000	-1.001	0.00	0.00	692.188	691.995	691.995
RECTA Pendiente	179020.000	355912.661	4611355.293	0.000	692.168	692.168	73.794871	0.000	-1.001	0.00	0.00	692.168	692.009	692.009
RECTA Pendiente	179040.000	355930.991	4611363.295	0.000	692.148	692.148	73.794871	0.000	-1.001	0.00	0.00	692.148	692.101	692.101
RECTA Pendiente	179060.000	355949.320	4611371.297	0.000	692.128	692.128	73.794871	0.000	-1.001	0.00	0.00	692.128	692.018	692.018
RECTA Pendiente	179080.000	355967.650	4611379.299	0.000	692.108	692.108	73.794871	0.000	-1.001	0.00	0.00	692.108	692.029	692.029
RECTA Pendiente	179100.000	355985.979	4611387.301	0.000	692.088	692.088	73.794871	0.000	-1.001	0.00	0.00	692.088	691.982	691.982
RECTA KV -43502	179120.000	356004.308	4611395.303	0.000	692.065	692.065	73.794871	0.000	-1.368	0.00	0.00	692.065	691.935	691.935
RECTA KV -43502	179140.000	356022.638	4611403.305	0.000	692.033	692.033	73.794871	0.000	-1.828	0.00	0.00	692.033	691.885	691.885
RECTA Pendiente	179160.000	356040.967	4611411.307	0.000	691.994	691.994	73.794871	0.000	-2.012	0.00	0.00	691.994	691.861	691.861
RECTA KV 36300	179180.000	356059.297	4611419.309	0.000	691.953	691.953	73.794871	0.000	-1.980	0.00	0.00	691.953	691.854	691.854
RECTA KV 36300	179200.000	356077.626	4611427.311	0.000	691.919	691.919	73.794871	0.000	-1.429	0.00	0.00	691.919	691.847	691.847
RECTA KV 36300	179220.000	356095.955	4611435.313	0.000	691.896	691.896	73.794871	0.000	-0.878	0.00	0.00	691.896	691.837	691.837
RECTA Pendiente	179240.000	356114.285	4611443.315	0.000	691.884	691.884	73.794871	0.000	-0.512	0.00	0.00	691.884	691.824	691.824
RECTA Pendiente	179260.000	356132.614	4611451.318	0.000	691.873	691.873	73.794871	0.000	-0.512	0.00	0.00	691.873	691.818	691.818
RECTA Pendiente	179280.000	356150.944	4611459.320	0.000	691.863	691.863	73.794871	0.000	-0.512	0.00	0.00	691.863	691.852	691.852
RECTA Pendiente	179300.000	356169.273	4611467.322	0.000	691.853	691.853	73.794871	0.000	-0.512	0.00	0.00	691.853	691.886	691.886
RECTA Pendiente	179320.000	356187.602	4611475.324	0.000	691.843	691.843	73.794871	0.000	-0.512	0.00	0.00	691.843	691.920	691.920
RECTA KV 40000	179340.000	356205.932	4611483.326	0.000	691.834	691.834	73.794871	0.000	-0.212	0.00	0.00	691.834	691.862	691.862
RECTA KV 40000	179360.000	356224.261	4611491.328	0.000	691.835	691.835	73.794871	0.000	0.288	0.00	0.00	691.835	691.762	691.762
RECTA KV 40000	179380.000	356242.591	4611499.330	0.000	691.846	691.846	73.794871	0.000	0.788	0.00	0.00	691.846	691.735	691.735
RECTA Rampa	179400.000	356260.920	4611507.332	0.000	691.864	691.864	73.794871	0.000	0.904	0.00	0.00	691.864	691.740	691.740
RECTA Rampa	179420.000	356279.249	4611515.334	0.000	691.882	691.882	73.794871	0.000	0.904	0.00	0.00	691.882	691.742	691.742
RECTA Rampa	179440.000	356297.579	4611523.336	0.000	691.900	691.900	73.794871	0.000	0.904	0.00	0.00	691.900	691.765	691.765
RECTA Rampa	179460.000	356315.908	4611531.338	0.000	691.918	691.918	73.794871	0.000	0.904	0.00	0.00	691.918	691.794	691.794
RECTA KV 40001	179480.000	356334.238	4611539.340	0.000	691.938	691.938	73.794871	0.000	1.243	0.00	0.00	691.938	691.815	691.815

Istram 20.08.08.26 11/02/21 08:49:04 200009 pagina 6

PROYECTO : ESTUDIO INFORMATIVO DE LA INTEGRACION DEL FFCC EN VALLADOLID
GRUPO : 1 : EJES ANCHO 1435 ALTERNATIVA 2
EJE : 2 : VIA 2 UIC

* * * PUNTOS DEL EJE EN PLANTA * * *

TIPO	P.K.	X	Y	RADIO	Z RAS IZ.	Z RAS DR.	AZIMUT	DIST. EJE	PEN(o/oo)	PERAL_I	PERAL_D	HILO BAJO	ZT (eje)	Z TERR.
RECTA KV 40001	179500.000	356352.567	4611547.342	0.000	691.968	691.968	73.794871	0.000	1.743	0.00	0.00	691.968	691.838	691.838
RECTA Rampa	179520.000	356370.896	4611555.344	0.000	692.008	692.008	73.794871	0.000	2.146	0.00	0.00	692.008	691.890	691.890
RECTA Rampa	179540.000	356389.226	4611563.346	0.000	692.051	692.051	73.794871	0.000	2.146	0.00	0.00	692.051	691.995	691.995
RECTA Rampa	179560.000	356407.555	4611571.348	0.000	692.093	692.093	73.794871	0.000	2.146	0.00	0.00	692.093	692.036	692.036
RECTA Rampa	179580.000	356425.885	4611579.350	0.000	692.136	692.136	73.794871	0.000	2.146	0.00	0.00	692.136	692.057	692.057
RECTA Rampa	179600.000	356444.214	4611587.353	0.000	692.179	692.179	73.794871	0.000	2.146	0.00	0.00	692.179	692.076	692.076
RECTA KV -14600	179620.000	356462.544	4611595.355	0.000	692.215	692.215	73.794871	0.000	1.141	0.00	0.00	692.215	692.095	692.095
RECTA Rampa	179640.000	356480.873	4611603.357	0.000	692.227	692.227	73.794871	0.000	0.407	0.00	0.00	692.227	692.145	692.145
RECTA Rampa	179660.000	356499.202	4611611.359	0.000	692.235	692.235	73.794871	0.000	0.407	0.00	0.00	692.235	692.138	692.138
RECTA KV 97505	179680.000	356517.532	4611619.361	0.000	692.244	692.244	73.794871	0.000	0.484	0.00	0.00	692.244	692.090	692.090
RECTA KV 97505	179700.000	356535.861	4611627.363	0.000	692.255	692.255	73.794871	0.000	0.690	0.00	0.00	692.255	692.090	692.090
RECTA KV 97505	179720.000	356554.191	4611635.365	0.000	692.271	692.271	73.794871	0.000	0.895	0.00	0.00	692.271	692.097	692.097
RECTA Rampa	179740.000	356572.520	4611643.367	0.000	692.290	692.290	73.794871	0.000	0.955	0.00	0.00	692.290	692.118	692.118
RECTA Rampa	179760.000	356590.849	4611651.369	0.000	692.309	692.309	73.794871	0.000	0.955	0.00	0.00	692.309	692.121	692.121
RECTA Rampa	179780.000	356609.179	4611659.371	0.000	692.328	692.328	73.794871	0.000	0.955	0.00	0.00	692.328	692.107	692.107
RECTA Rampa	179800.000	356627.508	4611667.373	0.000	692.347	692.347	73.794871	0.000	0.955	0.00	0.00	692.347	692.083	692.083
RECTA Rampa	179820.000	356645.838	4611675.375	0.000	692.366	692.366	73.794871	0.000	0.955	0.00	0.00	692.366	692.099	692.099
RECTA Rampa	179840.000	356664.167	4611683.377	0.000	692.385	692.385	73.794871	0.000	0.955	0.00	0.00	692.385	692.223	692.223
RECTA Rampa	179860.000	356682.496	4611691.379	0.000	692.405	692.405	73.794871	0.000	0.955	0.00	0.00	692.405	692.233	692.233
RECTA Rampa	179880.000	356700.826	4611699.381	0.000	692.424	692.424	73.794871	0.000	0.955	0.00	0.00	692.424	692.274	692.274
RECTA Rampa	179900.000	356719.155	4611707.383	0.000	692.443	692.443	73.794871	0.000	0.955	0.00	0.00	692.443	692.271	692.271
RECTA Rampa	179920.000	356737.485	4611715.385	0.000	692.462	692.462	73.794871	0.000	0.955	0.00	0.00	692.462	692.280	692.280
RECTA Rampa	179940.000	356755.814	4611723.388	0.000	692.481	692.481	73.794871	0.000	0.955	0.00	0.00	692.481	692.280	692.280
RECTA Rampa	179960.000	356774.143	4611731.390	0.000	692.500	692.500	73.794871	0.000	0.955	0.00	0.00	692.500	692.280	692.280
RECTA Rampa	179980.000	356792.473	4611739.392	0.000	692.519	692.519	73.794871	0.000	0.955	0.00	0.00	692.519	692.298	692.298
RECTA KV 15266	180000.000	356810.802	4611747.394	0.000	692.548	692.548	73.794871	0.000	2.068	0.00	0.00	692.548	692.331	692.331
RECTA KV 15266	180020.000	356829.132	4611755.396	0.000	692.602	692.602	73.794871	0.000	3.378	0.00	0.00	692.602	692.358	692.358
RECTA Rampa	180040.000	356847.461	4611763.398	0.000	692.677	692.677	73.794871	0.000	3.837	0.00	0.00	692.677	692.405	692.405
RECTA Rampa	180060.000	356865.790	4611771.400	0.000	692.754	692.754	73.794871	0.000	3.837	0.00	0.00	692.754	692.550	692.550
RECTA Rampa	180080.000	356884.120	4611779.402	0.000	692.831	692.831	73.794871	0.000	3.837	0.00	0.00	692.831	692.706	692.706
RECTA Rampa	180100.000	356902.449	4611787.404	0.000	692.907	692.907	73.794871	0.000	3.837	0.00	0.00	692.907	692.776	692.776
CLOT. Rampa	180109.815	356911.445	4611791.331	1000000.000	692.945	692.945	73.794871	0.000	3.837	0.00	0.00	692.945	692.848	692.848
CIRC. KV 92023	180119.815	356920.610	4611795.331	13000.000	692.984	692.984	73.819356	0.000	3.897	0.00	0.00	692.984	692.913	692.913
CIRC. KV 92023	180120.000	356920.779	4611795.405	13000.000	692.984	692.984	73.820260	0.000	3.899	0.00	0.00	692.984	692.913	692.913
CIRC. KV 92023	180140.000	356939.118	4611803.385	13000.000	693.065	693.065	73.918202	0.000	4.116	0.00	0.00	693.065	692.961	692.961
CIRC. KV 92023	180160.000	356957.469	4611811.338	13000.000	693.149	693.149	74.016143	0.000	4.333	0.00	0.00	693.149	693.012	693.012
CLOT. KV 92023	180172.944	356969.352	4611816.470	13000.000	693.206	693.206	74.079531	0.000	4.474	0.00	0.00	693.206	693.138	693.138
CLOT. KV 92023	180180.000	356975.832	4611819.263	44157.618	693.238	693.238	74.101894	0.000	4.551	0.00	0.00	693.238	693.178	693.178
CLOT. KV 92023	180182.944	356978.536	4611820.427	-1000000.000	693.251	693.251	74.104017	0.000	4.583	0.00	0.00	693.251	693.193	693.193
CLOT. Rampa	180200.000	356994.182	4611827.218	-1047.725	693.331	693.331	73.585837	0.000	4.681	29.85	0.00	693.331	693.258	693.258
CIRC. Rampa	180202.944	356996.874	4611828.409	-893.500	693.344	693.344	73.391515	0.000	4.681	35.00	0.00	693.344	693.272	693.272
CIRC. Rampa	180220.000	357012.395	4611835.480	-893.500	693.424	693.424	72.176273	0.000	4.681	35.00	0.00	693.424	693.307	693.307
CIRC. Rampa	180240.000	357030.419	4611844.148	-893.500	693.518	693.518	70.751271	0.000	4.681	35.00	0.00	693.518	693.060	693.060
CIRC. Rampa	180260.000	357048.244	4611853.216	-893.500	693.612	693.612	69.326269	0.000	4.681	35.00	0.00	693.612	693.308	693.308
CLOT. Rampa	180265.350	357052.977	4611855.710	-893.500	693.637	693.637	68.945101	0.000	4.681	35.00	0.00	693.637	693.299	693.299
CLOT. Rampa	180280.000	357065.863	4611862.680	-957.697	693.705	693.705	67.936252	0.000	4.681	31.34	0.00	693.705	693.284	693.284
CIRC. Rampa	180285.350	357070.541	4611865.274	-983.500	693.730	693.730	67.585300	0.000	4.681	30.00	0.00	693.730	693.292	693.292
CIRC. Rampa	180300.000	357083.279	4611872.511	-983.500	693.799	693.799	66.636986	0.000	4.681	30.00	0.00	693.799	693.344	693.344
CIRC. Rampa	180320.000	357100.492	4611882.694	-983.500	693.892	693.892	65.342386	0.000	4.681	30.00	0.00	693.892	693.486	693.486
CIRC. Rampa	180340.000	357117.495	4611893.226	-983.500	693.986	693.986	64.047785	0.000	4.681	30.00	0.00	693.986	693.651	693.651

Istram 20.08.08.26 11/02/21 08:49:04 200009 pagina 7

PROYECTO : ESTUDIO INFORMATIVO DE LA INTEGRACION DEL FFCC EN VALLADOLID
GRUPO : 1 : EJES ANCHO 1435 ALTERNATIVA 2
EJE : 2 : VIA 2 UIC

* * * PUNTOS DEL EJE EN PLANTA * * *

TIPO	P.K.	X	Y	RADIO	Z RAS IZ.	Z RAS DR.	AZIMUT	DIST. EJE	PEN(o/oo)	PERAL_I	PERAL_D	HILO BAJO	ZT (eje)	Z TERR.
CIRC. Rampa	180360.000	357134.279	4611904.100	-983.500	694.080	694.080	62.753185	0.000	4.681	30.00	0.00	694.080	693.807	693.807
CIRC. Rampa	180380.000	357150.839	4611915.314	-983.500	694.173	694.173	61.458585	0.000	4.681	30.00	0.00	694.173	694.000	694.000
CIRC. Rampa	180400.000	357167.168	4611926.863	-983.500	694.267	694.267	60.163984	0.000	4.681	30.00	0.00	694.267	694.097	694.097
CLOT. Rampa	180413.719	357178.231	4611934.975	-983.500	694.331	694.331	59.275960	0.000	4.681	30.00	0.00	694.331	694.179	694.179
CLOT. Rampa	180420.000	357183.258	4611938.741	-980.288	694.360	694.360	58.868718	0.000	4.681	30.00	0.00	694.360	694.208	694.208
CLOT. Rampa	180440.000	357199.103	4611950.945	-970.199	694.454	694.454	57.563122	0.000	4.681	30.00	0.00	694.454	694.298	694.298
CLOT. Rampa	180460.000	357214.692	4611963.473	-960.316	694.548	694.548	56.244020	0.000	4.681	30.00	0.00	694.548	694.404	694.404
CIRC. Rampa	180463.719	357217.562	4611965.838	-958.500	694.565	694.565	55.997251	0.000	4.681	30.00	0.00	694.565	694.350	694.350
CIRC. Rampa	180480.000	357230.018	4611976.322	-958.500	694.641	694.641	54.915887	0.000	4.681	30.00	0.00	694.641	694.306	694.306
CIRC. Rampa	180500.000	357245.072	4611989.489	-958.500	694.735	694.735	53.587520	0.000	4.681	30.00	0.00	694.735	694.418	694.418
CIRC. Rampa	180520.000	357259.848	4612002.967	-958.500	694.828	694.828	52.259153	0.000	4.681	30.00	0.00	694.828	694.442	694.442
CIRC. Rampa	180540.000	357274.340	4612016.750	-958.500	694.922	694.922	50.930786	0.000	4.681	30.00	0.00	694.922	694.561	694.561
CIRC. Rampa	180560.000	357288.541	4612030.832	-958.500	695.016	695.016	49.602420	0.000	4.681	30.00	0.00	695.016	694.567	694.567
CIRC. KV -251848	180580.000	357302.445	4612045.208	-958.500	695.109	695.109	48.274053	0.000	4.646	30.00	0.00	695.109	694.568	694.568
CIRC. KV -251848	180600.000	357316.046	4612059.871	-958.500	695.201	695.201	46.945686	0.000	4.567	30.00	0.00	695.201	694.690	694.690
CIRC. KV -251848	180620.000	357329.338	4612074.814	-958.500	695.292	695.292	45.617319	0.000	4.487	30.00	0.00	695.292	694.792	694.792
CIRC. KV -251848	180640.000	357342.316	4612090.032	-958.500	695.381	695.381	44.288953	0.000	4.408	30.00	0.00	695.381	694.875	694.875
CIRC. KV -251848	180660.000	357354.973	4612105.516	-958.500	695.468	695.468	42.960586	0.000	4.329	30.00	0.00	695.468	694.903	694.903
CLOT. KV -251848	180666.802	357359.203	4612110.843	-958.500	695.498	695.498	42.508809	0.000	4.302	30.00	0.00	695.498	694.898	694.898
CLOT. KV -251848	180680.000	357367.304	4612121.262	-959.595	695.554	695.554	41.632719	0.000	4.249	30.00	0.00	695.554	694.993	694.993
CLOT. KV -251848	180700.000	357379.305	4612137.261	-961.260	695.638	695.638	40.307018	0.000	4.170	30.00	0.00	695.638	695.146	695.146
CLOT. KV -251848	180720.000	357390.970	4612153.506	-962.931	695.721	695.721	38.983614	0.000	4.090	30.00	0.00	695.721	695.271	695.271
CIRC. KV -251848	180726.802	357394.860	4612159.086	-963.500	695.748	695.748	38.534049	0.000	4.063	30.00	0.00	695.748	695.304	695.304
CIRC. KV -251848	180740.000	357402.295	4612169.991	-963.500	695.802	695.802	37.662008	0.000	4.011	30.00	0.00	695.802	695.381	695.381
CIRC. KV -251848	180760.000	357413.276	4612186.706	-963.500	695.881	695.881	36.340535	0.000	3.932	30.00	0.00	695.881	695.524	695.524
CIRC. Rampa	180780.000	357423.907	4612203.646	-963.500	695.959	695.959	35.019061	0.000	3.886	30.00	0.00	695.959	695.530	695.530
CLOT. Rampa	180782.688	357425.309	4612205.939	-963.500	695.970	695.970	34.841486	0.000	3.886	30.00	0.00	695.970	695.536	695.536
CLOT. Rampa	180800.000	357434.192	4612220.799	-1165.230	696.037	696.037	33.796606	0.000	3.886	24.81	0.00	696.037	695.615	695.615
CLOT. Rampa	180820.000	357444.181	4612238.125	-1536.988	696.115	696.115	32.836060	0.000	3.886	18.81	0.00	696.115	695.750	695.750
CLOT. Rampa	180840.000	357453.944	4612255.580	-2257.099	696.192	696.192	32.139808	0.000	3.886	12.81	0.00	696.192	695.947	695.947
CLOT. Rampa	180860.000	357463.552	4612273.121	-4246.825	696.270	696.270	31.707851	0.000	3.886	6.81	0.00	696.270	696.052	696.052
CLOT. Rampa	180880.000	357473.078	4612290.707	-35850.658	696.348	696.348	31.540189	0.000	3.886	0.81	0.00	696.348	696.167	696.167
RECTA Rampa	180882.688	357474.355	4612293.071	0.000	696.358	696.358	31.537803	0.000	3.886	0.00	0.00	696.358	696.183	696.183
RECTA Rampa	180900.000	357482.585	4612308.303	0.000	696.426	696.426	31.537803	0.000	3.886	0.00	0.00	696.426	696.292	696.292
RECTA Rampa	180920.000	357492.093	4612325.898	0.000	696.503	696.503	31.537803	0.000	3.886	0.00	0.00	696.503	696.543	696.543
RECTA Rampa	180940.000	357501.600	4612343.494	0.000	696.581	696.581	31.537803	0.000	3.886	0.00	0.00	696.581	696.542	696.542
CLOT. Rampa	180954.064	357508.286	4612355.867	1000000.000	696.636	696.636	31.537803	0.000	3.886	0.00	0.00	696.636	696.000	696.000
CLOT. Rampa	180960.000	357511.108	4612361.089	63173.475	696.659	696.659	31.540794	0.000	3.886	0.00	0.00	696.659	696.055	696.055
CIRC. Rampa	180964.064	357513.040	4612364.665	37500.000	696.675	696.675	31.546291	0.000	3.886	0.00	0.00	696.675	696.150	696.150
CIRC. Rampa	180980.000	357520.621	4612378.682	37500.000	696.736	696.736	31.573345	0.000	3.886	0.00	0.00	696.736	696.175	696.175
CIRC. Rampa	181000.000	357530.143	4612396.270	37500.000	696.814	696.814	31.607298	0.000	3.886	0.00	0.00	696.814	695.779	695.779
CLOT. KV -18336	181018.312	357538.870	4612412.369	37500.000	696.879	696.879	31.638385	0.000	3.077	0.00	0.00	696.879	695.809	695.809
CLOT. KV -18336	181020.000	357539.674	4612413.853	45115.319	696.884	696.884	31.641009	0.000	2.985	0.00	0.00	696.884	695.752	695.752
RECTA KV -18336	181028.312	357543.638	4612421.159	0.000	696.907	696.907	31.646873	0.000	2.532	0.00	0.00	696.907	695.597	695.597
RECTA KV -18336	181040.000	357549.212	4612431.432	0.000	696.933	696.933	31.646873	0.000	1.894	0.00	0.00	696.933	694.198	694.198
RECTA KV -18336	181060.000	357558.750	4612449.012	0.000	696.960	696.960	31.646873	0.000	0.804	0.00	0.00	696.960	696.071	696.071
RECTA KV -18336	181080.000	357568.287	4612466.591	0.000	696.965	696.965	31.646873	0.000	-0.287	0.00	0.00	696.965	695.805	695.805
CLOT. KV -18336	181083.274	357569.848	4612469.468	1000000.000	696.964	696.964	31.646873	0.000	-0.466	0.00	0.00	696.964	694.143	694.143
CLOT. KV -18336	181100.000	357577.835	4612484.165	4110.317	696.949	696.949	31.776404	0.000	-1.378	18.25	0.00	696.949	696.194	696.194
CIRC. Pendiente	181110.774	357583.007	4612493.616	2500.000	696.932	696.932	31.997014	0.000	-1.567	30.00	0.00	696.932	696.500	696.500

Istram 20.08.08.26 11/02/21 08:49:04 200009 pagina 8

PROYECTO : ESTUDIO INFORMATIVO DE LA INTEGRACION DEL FFCC EN VALLADOLID
GRUPO : 1 : EJES ANCHO 1435 ALTERNATIVA 2
EJE : 2 : VIA 2 UIC

* * * PUNTOS DEL EJE EN PLANTA * * *

TIPO	P.K.	X	Y	RADIO	Z RAS IZ.	Z RAS DR.	AZIMUT	DIST. EJE	PEN(o/oo)	PERAL_I	PERAL_D	HILO BAJO	ZT (eje)	Z TERR.
CIRC. Pendiente	181120.000	357587.466	4612501.693	2500.000	696.918	696.918	32.231958	0.000	-1.567	30.00	0.00	696.918	696.500	696.500
CIRC. Pendiente	181140.000	357597.235	4612519.145	2500.000	696.886	696.886	32.741253	0.000	-1.567	30.00	0.00	696.886	696.500	696.500
CLOT. Pendiente	181144.641	357599.522	4612523.184	2500.000	696.879	696.879	32.859447	0.000	-1.567	30.00	0.00	696.879	696.500	696.500
CLOT. Pendiente	181160.000	357607.136	4612536.522	5662.424	696.855	696.855	33.141335	0.000	-1.567	13.24	0.00	696.855	696.251	696.251
CLOT. Pendiente	181172.141	357613.182	4612547.051	-1000000.000	696.836	696.836	33.209588	0.000	-1.567	0.00	0.00	696.836	696.259	696.259
CLOT. Pendiente	181180.000	357617.097	4612553.865	-8398.490	696.824	696.824	33.179803	0.000	-1.567	0.00	8.57	696.824	696.273	696.273
CIRC. Pendiente	181199.641	357626.840	4612570.920	-2400.000	696.793	696.793	32.844858	0.000	-1.567	0.00	30.00	696.793	695.944	695.944
CIRC. Pendiente	181200.000	357627.017	4612571.231	-2400.000	696.792	696.792	32.835347	0.000	-1.567	0.00	30.00	696.792	695.965	695.965
CIRC. KV 47093	181220.000	357636.809	4612588.671	-2400.000	696.762	696.762	32.304830	0.000	-1.336	0.00	30.00	696.762	696.500	696.500
CIRC. KV 47093	181240.000	357646.455	4612606.191	-2400.000	696.740	696.740	31.774314	0.000	-0.912	0.00	30.00	696.740	696.558	696.558
CLOT. KV 47093	181241.338	357647.095	4612607.365	-2400.000	696.739	696.739	31.738829	0.000	-0.883	0.00	30.00	696.739	696.553	696.553
CLOT. KV 47093	181260.000	357655.969	4612623.783	-7467.959	696.726	696.726	31.411768	0.000	-0.487	0.00	9.64	696.726	696.693	696.693
RECTA KV 47093	181268.838	357660.151	4612631.568	0.000	696.722	696.722	31.374099	0.000	-0.299	0.00	0.00	696.722	696.692	696.692
RECTA KV 47093	181280.000	357665.432	4612641.402	0.000	696.720	696.720	31.374099	0.000	-0.062	0.00	0.00	696.720	696.691	696.691
RECTA KV 47093	181300.000	357674.895	4612659.022	0.000	696.723	696.723	31.374099	0.000	0.362	0.00	0.00	696.723	696.686	696.686
CLOT. KV 47093	181314.512	357681.760	4612671.807	-1000000.000	696.731	696.731	31.374099	0.000	0.670	0.00	0.00	696.731	696.709	696.709
CLOT. KV 47093	181320.000	357684.357	4612676.642	-21636.759	696.735	696.735	31.366024	0.000	0.787	0.00	5.49	696.735	696.726	696.726
CIRC. Rampa	181339.512	357693.569	4612693.842	-4750.000	696.753	696.753	31.206567	0.000	0.981	0.00	25.00	696.753	696.722	696.722
CIRC. Rampa	181340.000	357693.799	4612694.273	-4750.000	696.754	696.754	31.200022	0.000	0.981	0.00	25.00	696.754	696.722	696.722
CIRC. Rampa	181360.000	357703.176	4612711.938	-4750.000	696.773	696.773	30.931972	0.000	0.981	0.00	25.00	696.773	696.714	696.714
CIRC. Rampa	181380.000	357712.478	4612729.643	-4750.000	696.793	696.793	30.663921	0.000	0.981	0.00	25.00	696.793	696.715	696.715
CLOT. Rampa	181389.340	357716.797	4612737.925	-4750.000	696.802	696.802	30.538740	0.000	0.981	0.00	25.00	696.802	696.648	696.648
CLOT. Rampa	181400.000	357721.708	4612747.387	-8280.944	696.812	696.812	30.426330	0.000	0.981	0.00	14.34	696.812	696.500	696.500
CLOT. Rampa	181414.340	357728.296	4612760.124	1000000.000	696.826	696.826	30.371208	0.000	0.981	0.00	0.00	696.826	696.266	696.266
CLOT. Rampa	181420.000	357730.895	4612765.151	21201.987	696.832	696.832	30.379705	0.000	0.981	5.66	0.00	696.832	696.236	696.236
CIRC. Rampa	181434.340	357737.489	4612777.885	6000.000	696.846	696.846	30.477311	0.000	0.981	20.00	0.00	696.846	696.293	696.293
CIRC. Rampa	181440.000	357740.099	4612782.908	6000.000	696.852	696.852	30.537364	0.000	0.981	20.00	0.00	696.852	696.346	696.346
CIRC. Rampa	181460.000	357749.358	4612800.635	6000.000	696.871	696.871	30.749571	0.000	0.981	20.00	0.00	696.871	696.341	696.341
CIRC. Rampa	181480.000	357758.677	4612818.332	6000.000	696.891	696.891	30.961777	0.000	0.981	20.00	0.00	696.891	696.319	696.319
CIRC. Rampa	181500.000	357768.054	4612835.997	6000.000	696.910	696.910	31.173984	0.000	0.981	20.00	0.00	696.910	696.310	696.310
CLOT. Rampa	181511.597	357773.519	4612846.226	6000.000	696.922	696.922	31.297031	0.000	0.981	20.00	0.00	696.922	696.359	696.359
CLOT. Rampa	181520.000	357777.490	4612853.631	7205.835	696.930	696.930	31.378730	0.000	0.981	16.64	0.00	696.930	696.370	696.370
CLOT. Rampa	181540.000	357786.974	4612871.239	13813.018	696.950	696.950	31.513167	0.000	0.981	8.64	0.00	696.950	696.372	696.372
CLOT. KV -86723	181560.000	357796.484	4612888.834	166264.169	696.969	696.969	31.563084	0.000	0.928	0.64	0.00	696.969	696.320	696.320
CIRC. KV -86723	181561.597	357797.244	4612890.239	1400000.000	696.971	696.971	31.563426	0.000	0.910	0.00	0.00	696.971	696.323	696.323
CIRC. KV -86723	181580.000	357805.999	4612906.426	1400000.000	696.985	696.985	31.564263	0.000	0.697	0.00	0.00	696.985	696.322	696.322
CIRC. KV -86723	181600.000	357815.514	4612924.017	1400000.000	696.997	696.997	31.565172	0.000	0.467	0.00	0.00	696.997	696.268	696.268
CIRC. KV -86723	181620.000	357825.029	4612941.609	1400000.000	697.004	697.004	31.566082	0.000	0.236	0.00	0.00	697.004	696.367	696.367
CIRC. KV -86723	181640.000	357834.545	4612959.200	1400000.000	697.006	697.006	31.566991	0.000	0.006	0.00	0.00	697.006	696.319	696.319
CIRC. KV -86723	181660.000	357844.060	4612976.791	1400000.000	697.004	697.004	31.567901	0.000	-0.225	0.00	0.00	697.004	696.298	696.298
CIRC. KV -86723	181680.000	357853.576	4612994.382	1400000.000	696.997	696.997	31.568810	0.000	-0.456	0.00	0.00	696.997	696.289	696.289
CIRC. Pendiente	181700.000	357863.093	4613011.973	1400000.000	696.987	696.987	31.569720	0.000	-0.553	0.00	0.00	696.987	696.287	696.287
CIRC. Pendiente	181720.000	357872.609	4613029.564	1400000.000	696.976	696.976	31.570629	0.000	-0.553	0.00	0.00	696.976	696.301	696.301
CIRC. Pendiente	181740.000	357882.126	4613047.155	1400000.000	696.965	696.965	31.571539	0.000	-0.553	0.00	0.00	696.965	696.316	696.316
CIRC. Pendiente	181760.000	357891.643	4613064.745	1400000.000	696.954	696.954	31.572448	0.000	-0.553	0.00	0.00	696.954	696.318	696.318
CIRC. Pendiente	181780.000	357901.160	4613082.336	1400000.000	696.943	696.943	31.573358	0.000	-0.553	0.00	0.00	696.943	696.500	696.500
CIRC. Pendiente	181800.000	357910.678	4613099.926	1400000.000	696.932	696.932	31.574267	0.000	-0.553	0.00	0.00	696.932	696.280	696.280
CIRC. Pendiente	181820.000	357920.196	4613117.516	1400000.000	696.920	696.920	31.575176	0.000	-0.553	0.00	0.00	696.920	696.500	696.500
CIRC. Pendiente	181840.000	357929.714	4613135.106	1400000.000	696.909	696.909	31.576086	0.000	-0.553	0.00	0.00	696.909	696.232	696.232
CIRC. KV 354394	181860.000	357939.232	4613152.696	1400000.000	696.899	696.899	31.576995	0.000	-0.513	0.00	0.00	696.899	696.197	696.197

Istram 20.08.08.26 11/02/21 08:49:04 200009 pagina 9

PROYECTO : ESTUDIO INFORMATIVO DE LA INTEGRACION DEL FFCC EN VALLADOLID
GRUPO : 1 : EJES ANCHO 1435 ALTERNATIVA 2
EJE : 2 : VIA 2 UIC

* * * PUNTOS DEL EJE EN PLANTA * * *

TIPO	P.K.	X	Y	RADIO	Z RAS IZ.	Z RAS DR.	AZIMUT	DIST. EJE	PEN(o/oo)	PERAL_I	PERAL_D	HILO BAJO	ZT (eje)	Z TERR.
CIRC. KV 354394	181880.000	357948.750	4613170.285	1400000.000	696.889	696.889	31.577905	0.000	-0.456	0.00	0.00	696.889	696.414	696.414
CIRC. KV 354394	181900.000	357958.269	4613187.875	1400000.000	696.880	696.880	31.578814	0.000	-0.400	0.00	0.00	696.880	696.252	696.252
CIRC. KV 354394	181920.000	357967.788	4613205.464	1400000.000	696.873	696.873	31.579724	0.000	-0.343	0.00	0.00	696.873	696.255	696.255
CIRC. KV 354394	181940.000	357977.308	4613223.054	1400000.000	696.867	696.867	31.580633	0.000	-0.287	0.00	0.00	696.867	696.284	696.284
CIRC. KV 354394	181960.000	357986.827	4613240.643	1400000.000	696.862	696.862	31.581543	0.000	-0.230	0.00	0.00	696.862	696.265	696.265
CIRC. Pendiente	181980.000	357996.347	4613258.232	1400000.000	696.857	696.857	31.582452	0.000	-0.178	0.00	0.00	696.857	696.308	696.308
CIRC. Pendiente	182000.000	358005.867	4613275.821	1400000.000	696.854	696.854	31.583362	0.000	-0.178	0.00	0.00	696.854	696.189	696.189
CIRC. Pendiente	182020.000	358015.387	4613293.409	1400000.000	696.850	696.850	31.584271	0.000	-0.178	0.00	0.00	696.850	696.280	696.280
CIRC. Pendiente	182040.000	358024.908	4613310.998	1400000.000	696.847	696.847	31.585180	0.000	-0.178	0.00	0.00	696.847	696.275	696.275
CIRC. Pendiente	182060.000	358034.429	4613328.587	1400000.000	696.843	696.843	31.586090	0.000	-0.178	0.00	0.00	696.843	696.196	696.196
CIRC. Pendiente	182080.000	358043.950	4613346.175	1400000.000	696.840	696.840	31.586999	0.000	-0.178	0.00	0.00	696.840	695.993	695.993
CIRC. Pendiente	182100.000	358053.471	4613363.763	1400000.000	696.836	696.836	31.587909	0.000	-0.178	0.00	0.00	696.836	696.183	696.183
CIRC. Pendiente	182120.000	358062.992	4613381.351	1400000.000	696.833	696.833	31.588818	0.000	-0.178	0.00	0.00	696.833	696.218	696.218
CLOT. Pendiente	182127.873	358066.741	4613388.275	1000000.000	696.831	696.831	31.589176	0.000	-0.178	0.00	0.00	696.831	696.306	696.306
CLOT. Pendiente	182140.000	358072.514	4613398.939	1000000.000	696.829	696.829	31.589661	0.000	-0.178	0.00	0.00	696.829	696.372	696.372
CLOT. Pendiente	182160.000	358082.036	4613416.527	1000000.000	696.825	696.825	31.590168	0.000	-0.178	0.00	0.00	696.825	696.500	696.500
RECTA Pendiente	182177.873	358090.546	4613432.244	0.000	696.822	696.822	31.590313	0.000	-0.178	0.00	0.00	696.822	696.500	696.500
RECTA Pendiente	182180.000	358091.558	4613434.115	0.000	696.822	696.822	31.590313	0.000	-0.178	0.00	0.00	696.822	696.500	696.500
RECTA Pendiente	182200.000	358101.080	4613451.702	0.000	696.818	696.818	31.590313	0.000	-0.178	0.00	0.00	696.818	696.555	696.555
RECTA Pendiente	182220.000	358110.602	4613469.290	0.000	696.815	696.815	31.590313	0.000	-0.178	0.00	0.00	696.815	696.565	696.565
RECTA Pendiente	182240.000	358120.125	4613486.878	0.000	696.811	696.811	31.590313	0.000	-0.178	0.00	0.00	696.811	696.578	696.578
RECTA Pendiente	182260.000	358129.647	4613504.466	0.000	696.808	696.808	31.590313	0.000	-0.178	0.00	0.00	696.808	696.575	696.575
RECTA Pendiente	182280.000	358139.169	4613522.054	0.000	696.804	696.804	31.590313	0.000	-0.178	0.00	0.00	696.804	696.568	696.568
RECTA Pendiente	182300.000	358148.691	4613539.641	0.000	696.801	696.801	31.590313	0.000	-0.178	0.00	0.00	696.801	696.562	696.562
RECTA Pendiente	182320.000	358158.213	4613557.229	0.000	696.797	696.797	31.590313	0.000	-0.178	0.00	0.00	696.797	696.600	696.600
RECTA Pendiente	182340.000	358167.735	4613574.817	0.000	696.794	696.794	31.590313	0.000	-0.178	0.00	0.00	696.794	696.586	696.586
RECTA Pendiente	182360.000	358177.257	4613592.405	0.000	696.790	696.790	31.590313	0.000	-0.178	0.00	0.00	696.790	696.735	696.735
RECTA Pendiente	182380.000	358186.779	4613609.992	0.000	696.786	696.786	31.590313	0.000	-0.178	0.00	0.00	696.786	696.500	696.500
RECTA Pendiente	182400.000	358196.301	4613627.580	0.000	696.783	696.783	31.590313	0.000	-0.178	0.00	0.00	696.783	696.500	696.500
RECTA Pendiente	182420.000	358205.823	4613645.168	0.000	696.779	696.779	31.590313	0.000	-0.178	0.00	0.00	696.779	696.500	696.500
RECTA Pendiente	182440.000	358215.345	4613662.756	0.000	696.776	696.776	31.590313	0.000	-0.178	0.00	0.00	696.776	696.500	696.500
RECTA Pendiente	182460.000	358224.868	4613680.344	0.000	696.772	696.772	31.590313	0.000	-0.178	0.00	0.00	696.772	696.500	696.500
RECTA Pendiente	182480.000	358234.390	4613697.931	0.000	696.769	696.769	31.590313	0.000	-0.178	0.00	0.00	696.769	696.500	696.500
CLOT. Pendiente	182499.833	358243.832	4613715.372	-1000000.000	696.765	696.765	31.590313	0.000	-0.178	0.00	0.00	696.765	696.500	696.500
CLOT. Pendiente	182500.000	358243.912	4613715.519	-1000000.000	696.765	696.765	31.590313	0.000	-0.178	0.00	0.00	696.765	696.500	696.500
CLOT. Pendiente	182520.000	358253.433	4613733.107	-185943.928	696.762	696.762	31.586861	0.000	-0.178	0.00	0.00	696.762	696.500	696.500
CIRC. Pendiente	182524.833	358255.734	4613737.357	-150000.000	696.761	696.761	31.585008	0.000	-0.178	0.00	0.00	696.761	696.500	696.500
CIRC. Pendiente	182540.000	358262.953	4613750.696	-150000.000	696.758	696.758	31.578571	0.000	-0.178	0.00	0.00	696.758	696.500	696.500
CIRC. Pendiente	182560.000	358272.471	4613768.286	-150000.000	696.754	696.754	31.570082	0.000	-0.178	0.00	0.00	696.754	696.500	696.500
CIRC. Pendiente	182580.000	358281.986	4613785.878	-150000.000	696.751	696.751	31.561594	0.000	-0.178	0.00	0.00	696.751	696.500	696.500
CIRC. Pendiente	182600.000	358291.499	4613803.470	-150000.000	696.747	696.747	31.553106	0.000	-0.178	0.00	0.00	696.747	696.500	696.500
CIRC. Pendiente	182620.000	358301.010	4613821.064	-150000.000	696.744	696.744	31.544618	0.000	-0.178	0.00	0.00	696.744	696.500	696.500
CIRC. Pendiente	182640.000	358310.518	4613838.659	-150000.000	696.740	696.740	31.536129	0.000	-0.178	0.00	0.00	696.740	696.500	696.500
CLOT. Pendiente	182646.997	358313.844	4613844.815	-150000.000	696.739	696.739	31.533160	0.000	-0.178	0.00	0.00	696.739	696.500	696.500
CLOT. Pendiente	182660.000	358320.024	4613856.256	-312581.157	696.737	696.737	31.529076	0.000	-0.178	0.00	0.00	696.737	696.500	696.500
CLOT. Pendiente	182671.997	358325.726	4613866.811	1000000.000	696.735	696.735	31.527855	0.000	-0.178	0.00	0.00	696.735	696.500	696.500
CLOT. Pendiente	182680.000	358329.529	4613873.853	484186.433	696.733	696.733	31.528381	0.000	-0.178	0.00	0.00	696.733	696.500	696.500
CIRC. KV 218893	182696.997	358337.608	4613888.807	155000.000	696.730	696.730	31.532989	0.000	-0.134	0.00	0.00	696.730	696.414	696.414
CIRC. KV 218893	182700.000	358339.035	4613891.450	155000.000	696.730	696.730	31.534222	0.000	-0.120	0.00	0.00	696.730	696.413	696.413
CIRC. KV 218893	182720.000	358348.543	4613909.045	155000.000	696.728	696.728	31.542437	0.000	-0.029	0.00	0.00	696.728	696.352	696.352

Istram 20.08.08.26 11/02/21 08:49:04 200009 pagina 10

PROYECTO : ESTUDIO INFORMATIVO DE LA INTEGRACION DEL FFCC EN VALLADOLID
GRUPO : 1 : EJES ANCHO 1435 ALTERNATIVA 2
EJE : 2 : VIA 2 UIC

* * * PUNTOS DEL EJE EN PLANTA * * *

TIPO	P.K.	X	Y	RADIO	Z RAS IZ.	Z RAS DR.	AZIMUT	DIST. EJE	PEN(o/oo)	PERAL_I	PERAL_D	HILO BAJO	ZT (eje)	Z TERR.
CIRC. KV 218893	182740.000	358358.053	4613926.640	155000.000	696.729	696.729	31.550651	0.000	0.062	0.00	0.00	696.729	701.047	701.047
CIRC. KV 218893	182760.000	358367.565	4613944.233	155000.000	696.731	696.731	31.558865	0.000	0.154	0.00	0.00	696.731	703.176	703.176
CIRC. KV 218893	182780.000	358377.079	4613961.824	155000.000	696.735	696.735	31.567080	0.000	0.245	0.00	0.00	696.735	696.311	696.311
CLOT. KV 218893	182789.238	358381.475	4613969.950	155000.000	696.737	696.737	31.570874	0.000	0.287	0.00	0.00	696.737	696.500	696.500
CLOT. KV 218893	182800.000	358386.596	4613979.415	272160.618	696.741	696.741	31.574343	0.000	0.336	0.00	0.00	696.741	696.500	696.500
RECTA KV 218893	182814.238	358393.372	4613991.937	0.000	696.746	696.746	31.576008	0.000	0.402	0.00	0.00	696.746	696.220	696.220
RECTA KV 218893	182820.000	358396.114	4613997.005	0.000	696.748	696.748	31.576008	0.000	0.428	0.00	0.00	696.748	696.207	696.207
RECTA Rampa	182840.000	358405.632	4614014.595	0.000	696.757	696.757	31.576008	0.000	0.430	0.00	0.00	696.757	696.199	696.199
RECTA Rampa	182860.000	358415.151	4614032.185	0.000	696.766	696.766	31.576008	0.000	0.430	0.00	0.00	696.766	696.185	696.185
RECTA Rampa	182880.000	358424.669	4614049.775	0.000	696.774	696.774	31.576008	0.000	0.430	0.00	0.00	696.774	696.230	696.230
RECTA Rampa	182900.000	358434.187	4614067.365	0.000	696.783	696.783	31.576008	0.000	0.430	0.00	0.00	696.783	696.231	696.231
RECTA Rampa	182920.000	358443.705	4614084.955	0.000	696.791	696.791	31.576008	0.000	0.430	0.00	0.00	696.791	696.221	696.221
RECTA Rampa	182940.000	358453.223	4614102.545	0.000	696.800	696.800	31.576008	0.000	0.430	0.00	0.00	696.800	696.213	696.213
RECTA Rampa	182960.000	358462.741	4614120.135	0.000	696.809	696.809	31.576008	0.000	0.430	0.00	0.00	696.809	696.144	696.144
RECTA Rampa	182980.000	358472.259	4614137.724	0.000	696.817	696.817	31.576008	0.000	0.430	0.00	0.00	696.817	696.180	696.180
RECTA Rampa	183000.000	358481.777	4614155.314	0.000	696.826	696.826	31.576008	0.000	0.430	0.00	0.00	696.826	696.272	696.272
RECTA Rampa	183020.000	358491.296	4614172.904	0.000	696.834	696.834	31.576008	0.000	0.430	0.00	0.00	696.834	696.174	696.174
RECTA Rampa	183040.000	358500.814	4614190.494	0.000	696.843	696.843	31.576008	0.000	0.430	0.00	0.00	696.843	695.724	695.724
RECTA KV -3281389	183060.000	358510.332	4614208.084	0.000	696.852	696.852	31.576008	0.000	0.424	0.00	0.00	696.852	696.122	696.122
RECTA KV -3281389	183080.000	358519.850	4614225.674	0.000	696.860	696.860	31.576008	0.000	0.418	0.00	0.00	696.860	696.275	696.275
RECTA KV -3281389	183100.000	358529.368	4614243.264	0.000	696.868	696.868	31.576008	0.000	0.412	0.00	0.00	696.868	696.190	696.190
RECTA KV -3281389	183120.000	358538.886	4614260.854	0.000	696.876	696.876	31.576008	0.000	0.406	0.00	0.00	696.876	696.201	696.201
RECTA KV -3281389	183140.000	358548.404	4614278.444	0.000	696.885	696.885	31.576008	0.000	0.400	0.00	0.00	696.885	696.170	696.170
RECTA KV -3281389	183160.000	358557.923	4614296.034	0.000	696.892	696.892	31.576008	0.000	0.394	0.00	0.00	696.892	696.194	696.194
RECTA Rampa	183180.000	358567.441	4614313.624	0.000	696.900	696.900	31.576008	0.000	0.390	0.00	0.00	696.900	695.743	695.743
RECTA Rampa	183200.000	358576.959	4614331.213	0.000	696.908	696.908	31.576008	0.000	0.390	0.00	0.00	696.908	696.000	696.000
RECTA Rampa	183220.000	358586.477	4614348.803	0.000	696.916	696.916	31.576008	0.000	0.390	0.00	0.00	696.916	696.111	696.111
RECTA Rampa	183240.000	358595.995	4614366.393	0.000	696.924	696.924	31.576008	0.000	0.390	0.00	0.00	696.924	696.063	696.063
RECTA Rampa	183260.000	358605.513	4614383.983	0.000	696.932	696.932	31.576008	0.000	0.390	0.00	0.00	696.932	696.144	696.144
RECTA Rampa	183280.000	358615.031	4614401.573	0.000	696.939	696.939	31.576008	0.000	0.390	0.00	0.00	696.939	696.150	696.150
RECTA Rampa	183300.000	358624.550	4614419.163	0.000	696.947	696.947	31.576008	0.000	0.390	0.00	0.00	696.947	696.112	696.112
RECTA Rampa	183320.000	358634.068	4614436.753	0.000	696.955	696.955	31.576008	0.000	0.390	0.00	0.00	696.955	696.124	696.124
RECTA Rampa	183340.000	358643.586	4614454.343	0.000	696.963	696.963	31.576008	0.000	0.390	0.00	0.00	696.963	696.189	696.189
RECTA Rampa	183360.000	358653.104	4614471.933	0.000	696.971	696.971	31.576008	0.000	0.390	0.00	0.00	696.971	696.190	696.190
RECTA Rampa	183380.000	358662.622	4614489.523	0.000	696.978	696.978	31.576008	0.000	0.390	0.00	0.00	696.978	696.194	696.194
RECTA Rampa	183400.000	358672.140	4614507.113	0.000	696.986	696.986	31.576008	0.000	0.390	0.00	0.00	696.986	696.089	696.089
CLOT. Rampa	183402.293	358673.231	4614509.129	1000000.000	696.987	696.987	31.576008	0.000	0.390	0.00	0.00	696.987	696.092	696.092
CLOT. Rampa	183420.000	358681.658	4614524.703	1000000.000	696.994	696.994	31.576258	0.000	0.390	0.00	0.00	696.994	696.204	696.204
CLOT. Rampa	183440.000	358691.177	4614542.292	1000000.000	697.002	697.002	31.577140	0.000	0.390	0.00	0.00	697.002	696.269	696.269
CIRC. Rampa	183442.293	358692.268	4614544.309	1000000.000	697.003	697.003	31.577281	0.000	0.390	0.00	0.00	697.003	696.269	696.269
CIRC. Rampa	183460.000	358700.695	4614559.882	1000000.000	697.010	697.010	31.578409	0.000	0.390	0.00	0.00	697.010	696.270	696.270
CIRC. Rampa	183480.000	358710.214	4614577.471	1000000.000	697.017	697.017	31.579682	0.000	0.390	0.00	0.00	697.017	696.256	696.256
CIRC. Rampa	183500.000	358719.734	4614595.061	1000000.000	697.025	697.025	31.580955	0.000	0.390	0.00	0.00	697.025	696.255	696.255
CIRC. Rampa	183520.000	358729.253	4614612.650	1000000.000	697.033	697.033	31.582228	0.000	0.390	0.00	0.00	697.033	696.251	696.251
CIRC. Rampa	183540.000	358738.773	4614630.239	1000000.000	697.041	697.041	31.583502	0.000	0.390	0.00	0.00	697.041	696.254	696.254
CIRC. Rampa	183560.000	358748.294	4614647.827	1000000.000	697.049	697.049	31.584775	0.000	0.390	0.00	0.00	697.049	696.262	696.262
CIRC. Rampa	183580.000	358757.814	4614665.416	1000000.000	697.056	697.056	31.586048	0.000	0.390	0.00	0.00	697.056	696.500	696.500
CIRC. Rampa	183600.000	358767.335	4614683.004	1000000.000	697.064	697.064	31.587321	0.000	0.390	0.00	0.00	697.064	696.503	696.503
CLOT. Rampa	183601.700	358768.145	4614684.499	1000000.000	697.065	697.065	31.587430	0.000	0.390	0.00	0.00	697.065	696.542	696.542
CLOT. Rampa	183620.000	358776.857	4614700.592	1000000.000	697.072	697.072	31.588328	0.000	0.390	0.00	0.00	697.072	696.716	696.716

Istram 20.08.08.26 11/02/21 08:49:04 200009 pagina 11

PROYECTO : ESTUDIO INFORMATIVO DE LA INTEGRACION DEL FFCC EN VALLADOLID
GRUPO : 1 : EJES ANCHO 1435 ALTERNATIVA 2
EJE : 2 : VIA 2 UIC

* * * PUNTOS DEL EJE EN PLANTA * * *

TIPO	P.K.	X	Y	RADIO	Z RAS IZ.	Z RAS DR.	AZIMUT	DIST. EJE	PEN(o/oo)	PERAL_I	PERAL_D	HILO BAJO	ZT (eje)	Z TERR.
CLOT. Rampa	183640.000	358786.379	4614718.180	1000000.000	697.080	697.080	31.588701	0.000	0.390	0.00	0.00	697.080	697.367	697.367
RECTA Rampa	183641.700	358787.188	4614719.675	0.000	697.081	697.081	31.588703	0.000	0.390	0.00	0.00	697.081	697.348	697.348
RECTA Rampa	183660.000	358795.900	4614735.768	0.000	697.088	697.088	31.588703	0.000	0.390	0.00	0.00	697.088	696.850	696.850
RECTA Rampa	183680.000	358805.422	4614753.356	0.000	697.095	697.095	31.588703	0.000	0.390	0.00	0.00	697.095	697.415	697.415
RECTA Rampa	183700.000	358814.943	4614770.944	0.000	697.103	697.103	31.588703	0.000	0.390	0.00	0.00	697.103	697.132	697.132
RECTA Rampa	183720.000	358824.465	4614788.532	0.000	697.111	697.111	31.588703	0.000	0.390	0.00	0.00	697.111	697.025	697.025
RECTA Rampa	183740.000	358833.987	4614806.120	0.000	697.119	697.119	31.588703	0.000	0.390	0.00	0.00	697.119	696.616	696.616
RECTA Rampa	183760.000	358843.508	4614823.708	0.000	697.127	697.127	31.588703	0.000	0.390	0.00	0.00	697.127	696.620	696.620
RECTA Rampa	183780.000	358853.030	4614841.297	0.000	697.135	697.135	31.588703	0.000	0.390	0.00	0.00	697.135	696.236	696.236
RECTA Rampa	183800.000	358862.552	4614858.885	0.000	697.142	697.142	31.588703	0.000	0.390	0.00	0.00	697.142	696.241	696.241
CLOT. Rampa	183809.288	358866.973	4614867.052	1000000.000	697.146	697.146	31.588703	0.000	0.390	0.00	0.00	697.146	696.251	696.251
CLOT. Rampa	183820.000	358872.074	4614876.472	81682.793	697.150	697.150	31.592877	0.000	0.390	1.53	0.00	697.150	696.180	696.180
CLOT. Rampa	183840.000	358881.600	4614894.058	28490.334	697.158	697.158	31.623016	0.000	0.390	4.39	0.00	697.158	696.500	696.500
CLOT. Rampa	183860.000	358891.138	4614911.637	17254.241	697.166	697.166	31.682258	0.000	0.390	7.24	0.00	697.166	696.500	696.500
CIRC. Rampa	183879.288	358900.357	4614928.579	12500.000	697.173	697.173	31.766956	0.000	0.390	10.00	0.00	697.173	696.500	696.500
CIRC. Rampa	183880.000	358900.697	4614929.204	12500.000	697.174	697.174	31.770583	0.000	0.390	10.00	0.00	697.174	696.500	696.500
CIRC. Rampa	183900.000	358910.283	4614946.758	12500.000	697.181	697.181	31.872443	0.000	0.390	10.00	0.00	697.181	696.204	696.204
CIRC. Rampa	183920.000	358919.897	4614964.295	12500.000	697.189	697.189	31.974302	0.000	0.390	10.00	0.00	697.189	696.191	696.191
CIRC. Rampa	183940.000	358929.539	4614981.818	12500.000	697.197	697.197	32.076161	0.000	0.390	10.00	0.00	697.197	696.277	696.277
CIRC. Rampa	183960.000	358939.209	4614999.324	12500.000	697.205	697.205	32.178020	0.000	0.390	10.00	0.00	697.205	696.500	696.500
CIRC. Rampa	183980.000	358948.907	4615016.816	12500.000	697.213	697.213	32.279879	0.000	0.390	10.00	0.00	697.213	696.513	696.513
CIRC. Rampa	184000.000	358958.633	4615034.292	12500.000	697.220	697.220	32.381738	0.000	0.390	10.00	0.00	697.220	696.500	696.500
CIRC. Rampa	184020.000	358968.387	4615051.752	12500.000	697.228	697.228	32.483598	0.000	0.390	10.00	0.00	697.228	696.500	696.500
CIRC. Rampa	184040.000	358978.169	4615069.197	12500.000	697.236	697.236	32.585457	0.000	0.390	10.00	0.00	697.236	696.318	696.318
CIRC. Rampa	184060.000	358987.979	4615086.625	12500.000	697.244	697.244	32.687316	0.000	0.390	10.00	0.00	697.244	696.425	696.425
CLOT. Rampa	184061.478	358988.705	4615087.913	12500.000	697.244	697.244	32.694844	0.000	0.390	10.00	0.00	697.244	696.428	696.428
CLOT. Rampa	184080.000	358997.816	4615104.039	16997.504	697.252	697.252	32.776695	0.000	0.390	7.35	0.00	697.252	696.443	696.443
CLOT. Rampa	184100.000	359007.673	4615121.441	27797.063	697.259	697.259	32.837051	0.000	0.390	4.50	0.00	697.259	696.458	696.458
CLOT. Rampa	184120.000	359017.542	4615138.837	76231.828	697.267	697.267	32.868305	0.000	0.390	1.64	0.00	697.267	696.477	696.477
CLOT. Rampa	184131.478	359023.209	4615148.818	-1000000.000	697.272	697.272	32.873098	0.000	0.390	0.00	0.00	697.272	696.509	696.509
CLOT. Rampa	184140.000	359027.417	4615156.229	-102677.180	697.275	697.275	32.870456	0.000	0.390	0.00	1.22	697.275	696.581	696.581
CLOT. Rampa	184160.000	359037.287	4615173.624	-30678.229	697.283	697.283	32.843504	0.000	0.390	0.00	4.07	697.283	696.838	696.838
CLOT. Rampa	184180.000	359047.147	4615191.025	-18033.111	697.291	697.291	32.787450	0.000	0.390	0.00	6.93	697.291	696.946	696.946
CLOT. Rampa	184200.000	359056.987	4615208.436	-12769.649	697.298	697.298	32.702293	0.000	0.390	0.00	9.79	697.298	696.987	696.987
CIRC. Rampa	184201.478	359057.713	4615209.724	-12500.000	697.299	697.299	32.694844	0.000	0.390	0.00	10.00	697.299	696.992	696.992
CIRC. Rampa	184220.000	359066.801	4615225.863	-12500.000	697.306	697.306	32.600513	0.000	0.390	0.00	10.00	697.306	697.028	697.028
CIRC. Rampa	184240.000	359076.587	4615243.305	-12500.000	697.314	697.314	32.498654	0.000	0.390	0.00	10.00	697.314	697.059	697.059
CIRC. KV -461086	184260.000	359086.345	4615260.763	-12500.000	697.322	697.322	32.396795	0.000	0.351	0.00	10.00	697.322	697.082	697.082
CIRC. KV -461086	184280.000	359096.075	4615278.237	-12500.000	697.328	697.328	32.294936	0.000	0.308	0.00	10.00	697.328	697.111	697.111
CIRC. KV -461086	184300.000	359105.777	4615295.726	-12500.000	697.334	697.334	32.193076	0.000	0.265	0.00	10.00	697.334	697.123	697.123
CIRC. KV -461086	184320.000	359115.451	4615313.230	-12500.000	697.339	697.339	32.091217	0.000	0.221	0.00	10.00	697.339	697.135	697.135
CIRC. KV -461086	184340.000	359125.098	4615330.750	-12500.000	697.343	697.343	31.989358	0.000	0.178	0.00	10.00	697.343	697.148	697.148
CIRC. KV -461086	184360.000	359134.716	4615348.286	-12500.000	697.346	697.346	31.887499	0.000	0.134	0.00	10.00	697.346	697.144	697.144
CIRC. KV -461086	184380.000	359144.306	4615365.837	-12500.000	697.348	697.348	31.785640	0.000	0.091	0.00	10.00	697.348	697.141	697.141
CLOT. KV -461086	184383.668	359146.062	4615369.058	-12500.000	697.348	697.348	31.766956	0.000	0.083	0.00	10.00	697.348	697.141	697.141
CLOT. KV -461086	184400.000	359153.868	4615383.402	-16303.803	697.349	697.349	31.693483	0.000	0.048	0.00	7.67	697.349	697.141	697.141
CLOT. KV -461086	184420.000	359163.410	4615400.980	-25988.715	697.350	697.350	31.629940	0.000	0.004	0.00	4.81	697.350	697.137	697.137
CLOT. Horizontal	184440.000	359172.937	4615418.565	-64015.994	697.350	697.350	31.595499	0.000	0.000	0.00	1.95	697.350	697.130	697.130
RECTA Horizontal	184453.668	359179.445	4615430.584	0.000	697.350	697.350	31.588703	0.000	0.000	0.00	0.00	697.350	697.122	697.122
RECTA Horizontal	184460.000	359182.459	4615436.152	0.000	697.350	697.350	31.588703	0.000	0.000	0.00	0.00	697.350	697.120	697.120

Istram 20.08.08.26 11/02/21 08:49:04 200009 pagina 12

PROYECTO : ESTUDIO INFORMATIVO DE LA INTEGRACION DEL FFCC EN VALLADOLID
GRUPO : 1 : EJES ANCHO 1435 ALTERNATIVA 2
EJE : 2 : VIA 2 UIC

* * * PUNTOS DEL EJE EN PLANTA * * *

TIPO	P.K.	X	Y	RADIO	Z RAS IZ.	Z RAS DR.	AZIMUT	DIST. EJE	PEN(o/oo)	PERAL_I	PERAL_D	HILO BAJO	ZT (eje)	Z TERR.
RECTA Horizontal	184480.000	359191.981	4615453.740	0.000	697.350	697.350	31.588703	0.000	0.000	0.00	0.00	697.350	697.120	697.120
RECTA Horizontal	184500.000	359201.503	4615471.328	0.000	697.350	697.350	31.588703	0.000	0.000	0.00	0.00	697.350	697.117	697.117
RECTA Horizontal	184520.000	359211.024	4615488.917	0.000	697.350	697.350	31.588703	0.000	0.000	0.00	0.00	697.350	697.112	697.112
RECTA Horizontal	184540.000	359220.546	4615506.505	0.000	697.350	697.350	31.588703	0.000	0.000	0.00	0.00	697.350	697.110	697.110
RECTA Horizontal	184560.000	359230.067	4615524.093	0.000	697.350	697.350	31.588703	0.000	0.000	0.00	0.00	697.350	697.110	697.110
RECTA Horizontal	184580.000	359239.589	4615541.681	0.000	697.350	697.350	31.588703	0.000	0.000	0.00	0.00	697.350	697.110	697.110
RECTA Horizontal	184600.000	359249.111	4615559.269	0.000	697.350	697.350	31.588703	0.000	0.000	0.00	0.00	697.350	697.119	697.119
RECTA Horizontal	184620.000	359258.632	4615576.857	0.000	697.350	697.350	31.588703	0.000	0.000	0.00	0.00	697.350	697.125	697.125
RECTA Horizontal	184640.000	359268.154	4615594.445	0.000	697.350	697.350	31.588703	0.000	0.000	0.00	0.00	697.350	697.139	697.139
RECTA Horizontal	184660.000	359277.676	4615612.033	0.000	697.350	697.350	31.588703	0.000	0.000	0.00	0.00	697.350	697.143	697.143
RECTA KV 133923	184680.000	359287.197	4615629.621	0.000	697.350	697.350	31.588703	0.000	0.060	0.00	0.00	697.350	697.173	697.173
RECTA KV 133923	184700.000	359296.719	4615647.209	0.000	697.353	697.353	31.588703	0.000	0.209	0.00	0.00	697.353	697.189	697.189
RECTA KV 133923	184720.000	359306.241	4615664.797	0.000	697.359	697.359	31.588703	0.000	0.358	0.00	0.00	697.359	697.221	697.221
RECTA KV 133923	184740.000	359315.762	4615682.385	0.000	697.367	697.367	31.588703	0.000	0.508	0.00	0.00	697.367	697.242	697.242
RECTA KV 133923	184760.000	359325.284	4615699.973	0.000	697.379	697.379	31.588703	0.000	0.657	0.00	0.00	697.379	697.280	697.280
RECTA KV 133923	184780.000	359334.806	4615717.561	0.000	697.394	697.394	31.588703	0.000	0.806	0.00	0.00	697.394	697.313	697.313
RECTA KV 133923	184800.000	359344.327	4615735.149	0.000	697.411	697.411	31.588703	0.000	0.956	0.00	0.00	697.411	697.378	697.378
CLOT. KV 133923	184807.630	359347.960	4615741.859	-1000000.000	697.419	697.419	31.588703	0.000	1.013	0.00	0.00	697.419	697.391	697.391
CLOT. KV 133923	184820.000	359353.849	4615752.737	-1000000.000	697.432	697.432	31.588595	0.000	1.105	0.00	0.00	697.432	697.400	697.400
CIRC. KV 133923	184837.630	359362.242	4615768.241	-1500000.000	697.452	697.452	31.588066	0.000	1.237	0.00	0.00	697.452	697.400	697.400
CIRC. KV 133923	184840.000	359363.370	4615770.325	-1500000.000	697.455	697.455	31.587966	0.000	1.254	0.00	0.00	697.455	697.400	697.400
CIRC. Rampa	184860.000	359372.892	4615787.913	-1500000.000	697.482	697.482	31.587117	0.000	1.344	0.00	0.00	697.482	697.400	697.400
CIRC. Rampa	184880.000	359382.413	4615805.501	-1500000.000	697.509	697.509	31.586268	0.000	1.344	0.00	0.00	697.509	697.409	697.409
CIRC. Rampa	184900.000	359391.934	4615823.090	-1500000.000	697.535	697.535	31.585419	0.000	1.344	0.00	0.00	697.535	697.444	697.444
CIRC. Rampa	184920.000	359401.454	4615840.678	-1500000.000	697.562	697.562	31.584570	0.000	1.344	0.00	0.00	697.562	697.457	697.457
CIRC. Rampa	184940.000	359410.975	4615858.267	-1500000.000	697.589	697.589	31.583722	0.000	1.344	0.00	0.00	697.589	697.477	697.477
CIRC. Rampa	184960.000	359420.495	4615875.856	-1500000.000	697.616	697.616	31.582873	0.000	1.344	0.00	0.00	697.616	697.494	697.494
CLOT. Rampa	184969.155	359424.852	4615883.907	-1000000.000	697.628	697.628	31.582484	0.000	1.344	0.00	0.00	697.628	697.502	697.502
CLOT. Rampa	184980.000	359430.015	4615893.445	-1000000.000	697.643	697.643	31.582107	0.000	1.344	0.00	0.00	697.643	697.516	697.516
RECTA Rampa	184999.155	359439.132	4615910.291	0.000	697.669	697.669	31.581848	0.000	1.344	0.00	0.00	697.669	697.557	697.557
RECTA Rampa	185000.000	359439.534	4615911.034	0.000	697.670	697.670	31.581848	0.000	1.344	0.00	0.00	697.670	697.557	697.557
RECTA Rampa	185020.000	359449.054	4615928.623	0.000	697.697	697.697	31.581848	0.000	1.344	0.00	0.00	697.697	697.600	697.600
RECTA Rampa	185040.000	359458.574	4615946.212	0.000	697.724	697.724	31.581848	0.000	1.344	0.00	0.00	697.724	697.600	697.600
RECTA Rampa	185060.000	359468.094	4615963.801	0.000	697.751	697.751	31.581848	0.000	1.344	0.00	0.00	697.751	697.614	697.614
RECTA Rampa	185080.000	359477.613	4615981.390	0.000	697.777	697.777	31.581848	0.000	1.344	0.00	0.00	697.777	697.660	697.660
RECTA Rampa	185100.000	359487.133	4615998.979	0.000	697.804	697.804	31.581848	0.000	1.344	0.00	0.00	697.804	697.670	697.670
RECTA KV -127500	185120.000	359496.653	4616016.568	0.000	697.831	697.831	31.581848	0.000	1.273	0.00	0.00	697.831	697.679	697.679
RECTA KV -127500	185140.000	359506.173	4616034.157	0.000	697.855	697.855	31.581848	0.000	1.116	0.00	0.00	697.855	697.695	697.695
RECTA KV -127500	185160.000	359515.692	4616051.746	0.000	697.876	697.876	31.581848	0.000	0.959	0.00	0.00	697.876	697.715	697.715
RECTA KV -127500	185180.000	359525.212	4616069.335	0.000	697.893	697.893	31.581848	0.000	0.803	0.00	0.00	697.893	697.746	697.746
RECTA KV -127500	185200.000	359534.732	4616086.924	0.000	697.908	697.908	31.581848	0.000	0.646	0.00	0.00	697.908	697.760	697.760
RECTA KV -127500	185220.000	359544.252	4616104.513	0.000	697.919	697.919	31.581848	0.000	0.489	0.00	0.00	697.919	697.770	697.770
RECTA KV -127500	185240.000	359553.771	4616122.102	0.000	697.927	697.927	31.581848	0.000	0.332	0.00	0.00	697.927	697.821	697.821
RECTA KV -127500	185260.000	359563.291	4616139.691	0.000	697.932	697.932	31.581848	0.000	0.175	0.00	0.00	697.932	697.854	697.854
RECTA KV -127500	185280.000	359572.811	4616157.280	0.000	697.934	697.934	31.581848	0.000	0.018	0.00	0.00	697.934	697.821	697.821
RECTA Pendiente	185300.000	359582.331	4616174.869	0.000	697.933	697.933	31.581848	0.000	-0.068	0.00	0.00	697.933	697.857	697.857
RECTA Pendiente	185320.000	359591.850	4616192.459	0.000	697.932	697.932	31.581848	0.000	-0.068	0.00	0.00	697.932	697.784	697.784
RECTA Pendiente	185340.000	359601.370	4616210.048	0.000	697.931	697.931	31.581848	0.000	-0.068	0.00	0.00	697.931	697.802	697.802
RECTA Pendiente	185360.000	359610.890	4616227.637	0.000	697.929	697.929	31.581848	0.000	-0.068	0.00	0.00	697.929	697.823	697.823
RECTA Pendiente	185380.000	359620.410	4616245.226	0.000	697.928	697.928	31.581848	0.000	-0.068	0.00	0.00	697.928	697.835	697.835

Istram 20.08.08.26 11/02/21 08:49:04 200009 pagina 13

PROYECTO : ESTUDIO INFORMATIVO DE LA INTEGRACION DEL FFCC EN VALLADOLID
GRUPO : 1 : EJES ANCHO 1435 ALTERNATIVA 2
EJE : 2 : VIA 2 UIC

* * * PUNTOS DEL EJE EN PLANTA * * *

TIPO	P.K.	X	Y	RADIO	Z RAS IZ.	Z RAS DR.	AZIMUT	DIST. EJE	PEN(o/oo)	PERAL_I	PERAL_D	HILO BAJO	ZT (eje)	Z TERR.
RECTA Pendiente	185400.000	359629.929	4616262.815	0.000	697.927	697.927	31.581848	0.000	-0.068	0.00	0.00	697.927	697.740	697.740
RECTA Pendiente	185420.000	359639.449	4616280.404	0.000	697.925	697.925	31.581848	0.000	-0.068	0.00	0.00	697.925	697.758	697.758
RECTA Pendiente	185440.000	359648.969	4616297.993	0.000	697.924	697.924	31.581848	0.000	-0.068	0.00	0.00	697.924	697.760	697.760
RECTA Pendiente	185460.000	359658.489	4616315.582	0.000	697.922	697.922	31.581848	0.000	-0.068	0.00	0.00	697.922	697.773	697.773
RECTA Pendiente	185480.000	359668.008	4616333.171	0.000	697.921	697.921	31.581848	0.000	-0.068	0.00	0.00	697.921	697.750	697.750
RECTA Pendiente	185500.000	359677.528	4616350.760	0.000	697.920	697.920	31.581848	0.000	-0.068	0.00	0.00	697.920	697.809	697.809
RECTA Pendiente	185520.000	359687.048	4616368.349	0.000	697.918	697.918	31.581848	0.000	-0.068	0.00	0.00	697.918	697.757	697.757
RECTA Pendiente	185540.000	359696.568	4616385.938	0.000	697.917	697.917	31.581848	0.000	-0.068	0.00	0.00	697.917	697.779	697.779
RECTA Pendiente	185560.000	359706.087	4616403.527	0.000	697.916	697.916	31.581848	0.000	-0.068	0.00	0.00	697.916	697.875	697.875
RECTA Pendiente	185580.000	359715.607	4616421.116	0.000	697.914	697.914	31.581848	0.000	-0.068	0.00	0.00	697.914	697.931	697.931
RECTA Pendiente	185600.000	359725.127	4616438.705	0.000	697.913	697.913	31.581848	0.000	-0.068	0.00	0.00	697.913	697.845	697.845
RECTA Pendiente	185620.000	359734.647	4616456.294	0.000	697.912	697.912	31.581848	0.000	-0.068	0.00	0.00	697.912	697.802	697.802
RECTA Pendiente	185640.000	359744.166	4616473.883	0.000	697.910	697.910	31.581848	0.000	-0.068	0.00	0.00	697.910	697.788	697.788
RECTA Pendiente	185660.000	359753.686	4616491.472	0.000	697.909	697.909	31.581848	0.000	-0.068	0.00	0.00	697.909	697.718	697.718
RECTA Pendiente	185680.000	359763.206	4616509.061	0.000	697.908	697.908	31.581848	0.000	-0.068	0.00	0.00	697.908	697.698	697.698
RECTA Pendiente	185700.000	359772.726	4616526.650	0.000	697.906	697.906	31.581848	0.000	-0.068	0.00	0.00	697.906	697.683	697.683
RECTA KV 2052966	185720.000	359782.245	4616544.239	0.000	697.905	697.905	31.581848	0.000	-0.059	0.00	0.00	697.905	697.662	697.662
RECTA KV 2052966	185740.000	359791.765	4616561.828	0.000	697.904	697.904	31.581848	0.000	-0.049	0.00	0.00	697.904	697.705	697.705
RECTA KV 2052966	185760.000	359801.285	4616579.417	0.000	697.903	697.903	31.581848	0.000	-0.039	0.00	0.00	697.903	697.747	697.747
RECTA KV 2052966	185780.000	359810.805	4616597.006	0.000	697.902	697.902	31.581848	0.000	-0.030	0.00	0.00	697.902	701.400	701.400
RECTA KV 2052966	185800.000	359820.324	4616614.595	0.000	697.902	697.902	31.581848	0.000	-0.020	0.00	0.00	697.902	697.749	697.749
RECTA KV 2052966	185820.000	359829.844	4616632.185	0.000	697.901	697.901	31.581848	0.000	-0.010	0.00	0.00	697.901	697.735	697.735
RECTA KV 2052966	185840.000	359839.364	4616649.774	0.000	697.901	697.901	31.581848	0.000	-0.000	0.00	0.00	697.901	697.722	697.722
RECTA KV 2052966	185860.000	359848.884	4616667.363	0.000	697.901	697.901	31.581848	0.000	0.009	0.00	0.00	697.901	697.722	697.722
RECTA KV 2052966	185880.000	359858.403	4616684.952	0.000	697.902	697.902	31.581848	0.000	0.019	0.00	0.00	697.902	697.713	697.713
RECTA Rampa	185900.000	359867.923	4616702.541	0.000	697.902	697.902	31.581848	0.000	0.020	0.00	0.00	697.902	697.682	697.682
RECTA Rampa	185920.000	359877.443	4616720.130	0.000	697.903	697.903	31.581848	0.000	0.020	0.00	0.00	697.903	697.716	697.716
RECTA Rampa	185940.000	359886.963	4616737.719	0.000	697.903	697.903	31.581848	0.000	0.020	0.00	0.00	697.903	697.744	697.744
RECTA Rampa	185960.000	359896.482	4616755.308	0.000	697.903	697.903	31.581848	0.000	0.020	0.00	0.00	697.903	697.768	697.768
RECTA Rampa	185980.000	359906.002	4616772.897	0.000	697.904	697.904	31.581848	0.000	0.020	0.00	0.00	697.904	697.807	697.807
RECTA Rampa	186000.000	359915.522	4616790.486	0.000	697.904	697.904	31.581848	0.000	0.020	0.00	0.00	697.904	697.833	697.833
RECTA Rampa	186020.000	359925.042	4616808.075	0.000	697.905	697.905	31.581848	0.000	0.020	0.00	0.00	697.905	697.833	697.833
RECTA Rampa	186040.000	359934.561	4616825.664	0.000	697.905	697.905	31.581848	0.000	0.020	0.00	0.00	697.905	697.858	697.858
RECTA Rampa	186060.000	359944.081	4616843.253	0.000	697.905	697.905	31.581848	0.000	0.020	0.00	0.00	697.905	697.860	697.860
RECTA Rampa	186080.000	359953.601	4616860.842	0.000	697.906	697.906	31.581848	0.000	0.020	0.00	0.00	697.906	697.860	697.860
RECTA Rampa	186100.000	359963.121	4616878.431	0.000	697.906	697.906	31.581848	0.000	0.020	0.00	0.00	697.906	697.860	697.860
RECTA Rampa	186120.000	359972.640	4616896.020	0.000	697.907	697.907	31.581848	0.000	0.020	0.00	0.00	697.907	697.872	697.872
RECTA Rampa	186140.000	359982.160	4616913.609	0.000	697.907	697.907	31.581848	0.000	0.020	0.00	0.00	697.907	697.879	697.879
RECTA Rampa	186160.000	359991.680	4616931.198	0.000	697.907	697.907	31.581848	0.000	0.020	0.00	0.00	697.907	697.899	697.899
CIRC. Rampa	186177.597	360000.056	4616946.674	600000.000	697.908	697.908	31.581848	0.000	0.020	0.00	0.00	697.908	697.944	697.944
CIRC. Rampa	186180.000	360001.200	4616948.787	600000.000	697.908	697.908	31.582102	0.000	0.020	0.00	0.00	697.908	697.951	697.951
CIRC. Rampa	186200.000	360010.720	4616966.376	600000.000	697.908	697.908	31.584225	0.000	0.020	0.00	0.00	697.908	697.951	697.951
CIRC. Rampa	186220.000	360020.240	4616983.965	600000.000	697.909	697.909	31.586347	0.000	0.020	0.00	0.00	697.909	697.893	697.893
CIRC. Rampa	186240.000	360029.762	4617001.553	600000.000	697.909	697.909	31.588469	0.000	0.020	0.00	0.00	697.909	697.860	697.860
CIRC. Rampa	186260.000	360039.284	4617019.141	600000.000	697.909	697.909	31.590591	0.000	0.020	0.00	0.00	697.909	697.824	697.824
CIRC. Rampa	186280.000	360048.806	4617036.728	600000.000	697.910	697.910	31.592713	0.000	0.020	0.00	0.00	697.910	697.787	697.787
RECTA Rampa	186297.719	360057.243	4617052.310	0.000	697.910	697.910	31.594593	0.000	0.020	0.00	0.00	697.910	697.764	697.764
RECTA Rampa	186300.000	360058.329	4617054.316	0.000	697.910	697.910	31.594593	0.000	0.020	0.00	0.00	697.910	697.761	697.761
RECTA Rampa	186320.000	360067.852	4617071.903	0.000	697.911	697.911	31.594593	0.000	0.020	0.00	0.00	697.911	697.746	697.746
RECTA Rampa	186340.000	360077.376	4617089.490	0.000	697.911	697.911	31.594593	0.000	0.020	0.00	0.00	697.911	697.809	697.809

Istram 20.08.08.26 11/02/21 08:49:04 200009 pagina 14

PROYECTO : ESTUDIO INFORMATIVO DE LA INTEGRACION DEL FFCC EN VALLADOLID
GRUPO : 1 : EJES ANCHO 1435 ALTERNATIVA 2
EJE : 2 : VIA 2 UIC

* * * PUNTOS DEL EJE EN PLANTA * * *

TIPO	P.K.	X	Y	RADIO	Z RAS IZ.	Z RAS DR.	AZIMUT	DIST. EJE	PEN(o/oo)	PERAL_I	PERAL_D	HILO BAJO	ZT (eje)	Z TERR.
RECTA Rampa	186360.000	360086.899	4617107.077	0.000	697.911	697.911	31.594593	0.000	0.020	0.00	0.00	697.911	697.851	697.851
RECTA Rampa	186380.000	360096.422	4617124.664	0.000	697.912	697.912	31.594593	0.000	0.020	0.00	0.00	697.912	697.803	697.803
RECTA Rampa	186400.000	360105.945	4617142.251	0.000	697.912	697.912	31.594593	0.000	0.020	0.00	0.00	697.912	697.796	697.796
RECTA Rampa	186420.000	360115.469	4617159.838	0.000	697.913	697.913	31.594593	0.000	0.020	0.00	0.00	697.913	697.806	697.806
RECTA Rampa	186440.000	360124.992	4617177.426	0.000	697.913	697.913	31.594593	0.000	0.020	0.00	0.00	697.913	697.740	697.740
RECTA Rampa	186460.000	360134.515	4617195.013	0.000	697.913	697.913	31.594593	0.000	0.020	0.00	0.00	697.913	697.740	697.740
RECTA Rampa	186480.000	360144.039	4617212.600	0.000	697.914	697.914	31.594593	0.000	0.020	0.00	0.00	697.914	697.723	697.723
RECTA Rampa	186500.000	360153.562	4617230.187	0.000	697.914	697.914	31.594593	0.000	0.020	0.00	0.00	697.914	697.693	697.693
RECTA Rampa	186520.000	360163.085	4617247.774	0.000	697.915	697.915	31.594593	0.000	0.020	0.00	0.00	697.915	697.663	697.663
RECTA Rampa	186540.000	360172.608	4617265.361	0.000	697.915	697.915	31.594593	0.000	0.020	0.00	0.00	697.915	697.690	697.690
RECTA Rampa	186560.000	360182.132	4617282.948	0.000	697.915	697.915	31.594593	0.000	0.020	0.00	0.00	697.915	697.720	697.720
RECTA Rampa	186580.000	360191.655	4617300.535	0.000	697.916	697.916	31.594593	0.000	0.020	0.00	0.00	697.916	697.733	697.733
RECTA Rampa	186600.000	360201.178	4617318.123	0.000	697.916	697.916	31.594593	0.000	0.020	0.00	0.00	697.916	697.761	697.761
RECTA Rampa	186620.000	360210.701	4617335.710	0.000	697.917	697.917	31.594593	0.000	0.020	0.00	0.00	697.917	697.821	697.821
RECTA Rampa	186640.000	360220.225	4617353.297	0.000	697.917	697.917	31.594593	0.000	0.020	0.00	0.00	697.917	697.829	697.829
RECTA Rampa	186660.000	360229.748	4617370.884	0.000	697.917	697.917	31.594593	0.000	0.020	0.00	0.00	697.917	697.755	697.755
RECTA Rampa	186680.000	360239.271	4617388.471	0.000	697.918	697.918	31.594593	0.000	0.020	0.00	0.00	697.918	697.791	697.791
RECTA Rampa	186700.000	360248.795	4617406.058	0.000	697.918	697.918	31.594593	0.000	0.020	0.00	0.00	697.918	697.839	697.839
RECTA Rampa	186720.000	360258.318	4617423.645	0.000	697.919	697.919	31.594593	0.000	0.020	0.00	0.00	697.919	697.796	697.796
RECTA Rampa	186740.000	360267.841	4617441.233	0.000	697.919	697.919	31.594593	0.000	0.020	0.00	0.00	697.919	697.826	697.826
RECTA Rampa	186760.000	360277.364	4617458.820	0.000	697.919	697.919	31.594593	0.000	0.020	0.00	0.00	697.919	697.860	697.860
RECTA Rampa	186780.000	360286.888	4617476.407	0.000	697.920	697.920	31.594593	0.000	0.020	0.00	0.00	697.920	697.860	697.860
RECTA Rampa	186800.000	360296.411	4617493.994	0.000	697.920	697.920	31.594593	0.000	0.020	0.00	0.00	697.920	697.860	697.860
RECTA Rampa	186820.000	360305.934	4617511.581	0.000	697.921	697.921	31.594593	0.000	0.020	0.00	0.00	697.921	697.802	697.802
RECTA Rampa	186840.000	360315.457	4617529.168	0.000	697.921	697.921	31.594593	0.000	0.020	0.00	0.00	697.921	697.781	697.781
RECTA Rampa	186860.000	360324.981	4617546.755	0.000	697.921	697.921	31.594593	0.000	0.020	0.00	0.00	697.921	697.780	697.780
RECTA Rampa	186880.000	360334.504	4617564.343	0.000	697.922	697.922	31.594593	0.000	0.020	0.00	0.00	697.922	697.768	697.768
RECTA Rampa	186900.000	360344.027	4617581.930	0.000	697.922	697.922	31.594593	0.000	0.020	0.00	0.00	697.922	697.790	697.790
RECTA Rampa	186920.000	360353.550	4617599.517	0.000	697.923	697.923	31.594593	0.000	0.020	0.00	0.00	697.923	697.752	697.752
RECTA Rampa	186940.000	360363.074	4617617.104	0.000	697.923	697.923	31.594593	0.000	0.020	0.00	0.00	697.923	697.783	697.783
RECTA Rampa	186960.000	360372.597	4617634.691	0.000	697.923	697.923	31.594593	0.000	0.020	0.00	0.00	697.923	697.794	697.794
RECTA Rampa	186980.000	360382.120	4617652.278	0.000	697.924	697.924	31.594593	0.000	0.020	0.00	0.00	697.924	697.773	697.773
RECTA Rampa	187000.000	360391.644	4617669.865	0.000	697.924	697.924	31.594593	0.000	0.020	0.00	0.00	697.924	697.724	697.724
RECTA Rampa	187020.000	360401.167	4617687.452	0.000	697.925	697.925	31.594593	0.000	0.020	0.00	0.00	697.925	697.705	697.705
RECTA Rampa	187040.000	360410.690	4617705.040	0.000	697.925	697.925	31.594593	0.000	0.020	0.00	0.00	697.925	697.723	697.723
RECTA Rampa	187060.000	360420.213	4617722.627	0.000	697.925	697.925	31.594593	0.000	0.020	0.00	0.00	697.925	697.748	697.748
RECTA Rampa	187080.000	360429.737	4617740.214	0.000	697.926	697.926	31.594593	0.000	0.020	0.00	0.00	697.926	697.691	697.691
RECTA Rampa	187100.000	360439.260	4617757.801	0.000	697.926	697.926	31.594593	0.000	0.020	0.00	0.00	697.926	697.664	697.664
RECTA KV 62161500	187120.000	360448.783	4617775.388	0.000	697.927	697.927	31.594593	0.000	0.020	0.00	0.00	697.927	697.684	697.684
RECTA KV 62161500	187140.000	360458.306	4617792.975	0.000	697.927	697.927	31.594593	0.000	0.021	0.00	0.00	697.927	697.697	697.697
RECTA KV 62161500	187160.000	360467.830	4617810.562	0.000	697.927	697.927	31.594593	0.000	0.021	0.00	0.00	697.927	697.717	697.717
RECTA KV 62161500	187180.000	360477.353	4617828.150	0.000	697.928	697.928	31.594593	0.000	0.021	0.00	0.00	697.928	697.733	697.733
RECTA KV 62161500	187200.000	360486.876	4617845.737	0.000	697.928	697.928	31.594593	0.000	0.022	0.00	0.00	697.928	697.749	697.749
RECTA KV 62161500	187220.000	360496.400	4617863.324	0.000	697.929	697.929	31.594593	0.000	0.022	0.00	0.00	697.929	697.674	697.674
RECTA KV 62161500	187240.000	360505.923	4617880.911	0.000	697.929	697.929	31.594593	0.000	0.022	0.00	0.00	697.929	697.665	697.665
RECTA KV 62161500	187260.000	360515.446	4617898.498	0.000	697.930	697.930	31.594593	0.000	0.023	0.00	0.00	697.930	697.657	697.657
RECTA KV 62161500	187280.000	360524.969	4617916.085	0.000	697.930	697.930	31.594593	0.000	0.023	0.00	0.00	697.930	697.651	697.651
RECTA Rampa	187300.000	360534.493	4617933.672	0.000	697.930	697.930	31.594593	0.000	0.023	0.00	0.00	697.930	697.655	697.655
RECTA Rampa	187320.000	360544.016	4617951.259	0.000	697.931	697.931	31.594593	0.000	0.023	0.00	0.00	697.931	697.661	697.661
RECTA Rampa	187340.000	360553.539	4617968.847	0.000	697.931	697.931	31.594593	0.000	0.023	0.00	0.00	697.931	697.664	697.664

Istram 20.08.08.26 11/02/21 08:49:05 200009 pagina 15
PROYECTO : ESTUDIO INFORMATIVO DE LA INTEGRACION DEL FFCC EN VALLADOLID
GRUPO : 1 : EJES ANCHO 1435 ALTERNATIVA 2
EJE : 2 : VIA 2 UIC

* * * PUNTOS DEL EJE EN PLANTA * * *

TIPO	P.K.	X	Y	RADIO	Z RAS IZ.	Z RAS DR.	AZIMUT	DIST. EJE	PEN(o/oo)	PERAL_I	PERAL_D	HILO BAJO	ZT (eje)	Z TERR.
RECTA Rampa	187360.000	360563.062	4617986.434	0.000	697.932	697.932	31.594593	0.000	0.023	0.00	0.00	697.932	697.664	697.664
RECTA Rampa	187380.000	360572.586	4618004.021	0.000	697.932	697.932	31.594593	0.000	0.023	0.00	0.00	697.932	697.652	697.652
RECTA Rampa	187400.000	360582.109	4618021.608	0.000	697.933	697.933	31.594593	0.000	0.023	0.00	0.00	697.933	697.640	697.640
RECTA Rampa	187420.000	360591.632	4618039.195	0.000	697.933	697.933	31.594593	0.000	0.023	0.00	0.00	697.933	697.630	697.630
RECTA Rampa	187440.000	360601.156	4618056.782	0.000	697.934	697.934	31.594593	0.000	0.023	0.00	0.00	697.934	697.633	697.633
RECTA Rampa	187460.000	360610.679	4618074.369	0.000	697.934	697.934	31.594593	0.000	0.023	0.00	0.00	697.934	697.635	697.635
RECTA Rampa	187480.000	360620.202	4618091.957	0.000	697.935	697.935	31.594593	0.000	0.023	0.00	0.00	697.935	697.635	697.635
RECTA Rampa	187500.000	360629.725	4618109.544	0.000	697.935	697.935	31.594593	0.000	0.023	0.00	0.00	697.935	697.637	697.637
RECTA Rampa	187520.000	360639.249	4618127.131	0.000	697.936	697.936	31.594593	0.000	0.023	0.00	0.00	697.936	697.639	697.639
RECTA Rampa	187540.000	360648.772	4618144.718	0.000	697.936	697.936	31.594593	0.000	0.023	0.00	0.00	697.936	697.643	697.643
CLOT. Rampa	187552.821	360654.877	4618155.993	1000000.000	697.936	697.936	31.594593	0.000	0.023	0.00	0.00	697.936	697.645	697.645
CLOT. Rampa	187560.000	360658.295	4618162.305	89955.305	697.936	697.936	31.597133	0.000	0.023	1.75	0.00	697.936	697.645	697.645
CLOT. Rampa	187580.000	360667.823	4618179.890	23759.533	697.937	697.937	31.631004	0.000	0.023	6.63	0.00	697.937	697.645	697.645
CLOT. Rampa	187600.000	360677.365	4618197.466	13687.360	697.937	697.937	31.704310	0.000	0.023	11.51	0.00	697.937	697.648	697.648
CLOT. KV 10600	187620.000	360686.934	4618215.029	9612.441	697.954	697.954	31.817050	0.000	1.764	16.39	0.00	697.954	697.679	697.679
CLOT. KV 10600	187640.000	360696.538	4618232.572	7407.211	698.008	698.008	31.969225	0.000	3.651	21.26	0.00	698.008	697.729	697.729
CLOT. KV 10600	187660.000	360706.191	4618250.089	6024.992	698.100	698.100	32.160834	0.000	5.537	26.14	0.00	698.100	697.779	697.779
CLOT. KV 10600	187680.000	360715.901	4618267.573	5077.507	698.230	698.230	32.391878	0.000	7.424	31.02	0.00	698.230	697.771	697.771
CLOT. KV 10600	187700.000	360725.680	4618285.020	4387.527	698.397	698.397	32.662356	0.000	9.311	35.90	0.00	698.397	697.729	697.729
CLOT. KV 10600	187720.000	360735.538	4618302.421	3862.636	698.602	698.602	32.972268	0.000	11.198	40.78	0.00	698.602	697.700	697.700
CLOT. KV 10600	187740.000	360745.486	4618319.771	3449.914	698.845	698.845	33.321615	0.000	13.085	45.65	0.00	698.845	697.672	697.672
CIRC. KV 10600	187757.821	360754.435	4618335.183	3150.000	699.093	699.093	33.666133	0.000	14.766	50.00	0.00	699.093	697.679	697.679
CLOT. KV 10600	187757.821	360754.435	4618335.183	3150.007	699.093	699.093	33.666125	0.000	14.766	50.00	0.00	699.093	697.679	697.679

Istram 20.08.08.26 11/02/21 08:50:18 200009 pagina 1
PROYECTO : ESTUDIO INFORMATIVO DE LA INTEGRACION DEL FFCC EN VALLADOLID
GRUPO : 1 : EJES ANCHO 1435 ALTERNATIVA 2
EJE : 35 : VIA 4 UIC

* * * PUNTOS DEL EJE EN PLANTA * * *

TIPO	P.K.	X	Y	RADIO	Z RAS IZ.	Z RAS DR.	AZIMUT	DIST. EJE	PEN(o/oo)	PERAL_I	PERAL_D	HILO BAJO	ZT (eje)	Z TERR.
RECTA Pendiente	0.000	355923.398	4611353.449	0.000	692.159	692.159	80.769753	0.000	-0.991	0.00	0.00	692.159	691.983	691.983
RECTA Pendiente	20.000	355942.492	4611359.399	0.000	692.139	692.139	80.769753	0.000	-0.991	0.00	0.00	692.139	691.960	691.960
RECTA Pendiente	40.000	355961.587	4611365.349	0.000	692.119	692.119	80.769753	0.000	-0.991	0.00	0.00	692.119	691.891	691.891
RECTA Pendiente	60.000	355980.681	4611371.299	0.000	692.100	692.100	80.769753	0.000	-0.991	0.00	0.00	692.100	691.938	691.938
RECTA Pendiente	80.000	355999.776	4611377.249	0.000	692.080	692.080	80.769753	0.000	-0.991	0.00	0.00	692.080	691.851	691.851
CIRC. Pendiente	80.615	356000.362	4611377.431	-750.000	692.079	692.079	80.769753	0.000	-0.991	0.00	0.00	692.079	691.851	691.851
CIRC. KV -16921	100.000	356018.793	4611383.437	-750.000	692.058	692.058	79.124271	0.000	-1.518	0.00	0.00	692.058	691.899	691.899
CIRC. Pendiente	120.000	356037.640	4611390.130	-750.000	692.015	692.015	77.426618	0.000	-2.616	0.00	0.00	692.015	691.915	691.915
CIRC. Pendiente	140.000	356056.301	4611397.323	-750.000	691.963	691.963	75.728965	0.000	-2.616	0.00	0.00	691.963	692.451	692.451
CIRC. KV 13079	160.000	356074.763	4611405.011	-750.000	691.918	691.918	74.031312	0.000	-1.588	0.00	0.00	691.918	691.903	691.903
RECTA KV 13079	162.752	356077.287	4611406.108	0.000	691.914	691.914	73.797725	0.000	-1.378	0.00	0.00	691.914	691.950	691.950
RECTA Pendiente	180.000	356093.095	4611413.008	0.000	691.900	691.900	73.797725	0.000	-0.513	0.00	0.00	691.900	692.246	692.246
RECTA Pendiente	200.000	356111.425	4611421.009	0.000	691.890	691.890	73.797725	0.000	-0.513	0.00	0.00	691.890	692.000	692.000
RECTA Pendiente	220.000	356129.755	4611429.011	0.000	691.879	691.879	73.797725	0.000	-0.513	0.00	0.00	691.879	691.749	691.749
RECTA Pendiente	240.000	356148.084	4611437.012	0.000	691.869	691.869	73.797725	0.000	-0.513	0.00	0.00	691.869	691.738	691.738
RECTA Pendiente	260.000	356166.414	4611445.013	0.000	691.859	691.859	73.797725	0.000	-0.513	0.00	0.00	691.859	691.729	691.729
RECTA Pendiente	280.000	356184.744	4611453.014	0.000	691.849	691.849	73.797725	0.000	-0.513	0.00	0.00	691.849	691.719	691.719
RECTA KV 39998	300.000	356203.074	4611461.016	0.000	691.838	691.838	73.797725	0.000	-0.501	0.00	0.00	691.838	691.710	691.710
RECTA KV 39998	320.000	356221.403	4611469.017	0.000	691.833	691.833	73.797725	0.000	-0.001	0.00	0.00	691.833	691.714	691.714
RECTA KV 39998	340.000	356239.733	4611477.018	0.000	691.838	691.838	73.797725	0.000	0.499	0.00	0.00	691.838	691.730	691.730
RECTA Rampa	360.000	356258.063	4611485.019	0.000	691.853	691.853	73.797725	0.000	0.904	0.00	0.00	691.853	691.711	691.711
RECTA Rampa	380.000	356276.393	4611493.020	0.000	691.871	691.871	73.797725	0.000	0.904	0.00	0.00	691.871	691.709	691.709
RECTA Rampa	400.000	356294.722	4611501.022	0.000	691.889	691.889	73.797725	0.000	0.904	0.00	0.00	691.889	691.754	691.754
RECTA Rampa	420.000	356313.052	4611509.023	0.000	691.907	691.907	73.797725	0.000	0.904	0.00	0.00	691.907	691.760	691.760
RECTA KV 40002	440.000	356331.382	4611517.024	0.000	691.925	691.925	73.797725	0.000	0.954	0.00	0.00	691.925	691.780	691.780
RECTA KV 40002	460.000	356349.712	4611525.025	0.000	691.950	691.950	73.797725	0.000	1.454	0.00	0.00	691.950	691.722	691.722
RECTA KV 40002	480.000	356368.041	4611533.027	0.000	691.984	691.984	73.797725	0.000	1.954	0.00	0.00	691.984	691.839	691.839
RECTA Rampa	500.000	356386.371	4611541.028	0.000	692.026	692.026	73.797725	0.000	2.146	0.00	0.00	692.026	691.928	691.928
RECTA Rampa	520.000	356404.701	4611549.029	0.000	692.069	692.069	73.797725	0.000	2.146	0.00	0.00	692.069	691.969	691.969
RECTA Rampa	540.000	356423.031	4611557.030	0.000	692.112	692.112	73.797725	0.000	2.146	0.00	0.00	692.112	692.015	692.015
RECTA Rampa	560.000	356441.360	4611565.032	0.000	692.155	692.155	73.797725	0.000	2.146	0.00	0.00	692.155	691.991	691.991
RECTA KV -14599	580.000	356459.690	4611573.033	0.000	692.197	692.197	73.797725	0.000	1.931	0.00	0.00	692.197	692.018	692.018
RECTA KV -14599	600.000	356478.020	4611581.034	0.000	692.222	692.222	73.797725	0.000	0.561	0.00	0.00	692.222	692.059	692.059
CIRC. Rampa	605.949	356483.473	4611583.414	-1000.000	692.225	692.225	73.797725	0.000	0.405	0.00	0.00	692.225	692.055	692.055
CIRC. Rampa	620.000	356496.310	4611589.126	-1000.000	692.230	692.230	72.903235	0.000	0.405	0.00	0.00	692.230	691.986	691.986
RECTA Rampa	629.895	356505.301	4611593.256	0.000	692.234	692.234	72.273326	0.000	0.405	0.00	0.00	692.234	692.038	692.038
RECTA Rampa	640.000	356514.463	4611597.519	0.000	692.238	692.238	72.273326	0.000	0.405	0.00	0.00	692.238	692.032	692.032
RECTA KV 97507	660.000	356532.596	4611605.957	0.000	692.248	692.248	72.273326	0.000	0.578	0.00	0.00	692.248	692.000	692.000
CIRC. KV 97507	676.468	356547.527	4611612.904	-1000.000	692.259	692.259	72.273326	0.000	0.747	0.00	0.00	692.259	692.088	692.088
CIRC. KV 97507	680.000	356550.727	4611614.400	-1000.000	692.262	692.262	72.048472	0.000	0.783	0.00	0.00	692.262	692.092	692.092
CIRC. Rampa	700.000	356568.743	4611623.082	-1000.000	692.279	692.279	70.775233	0.000	0.950	0.00	0.00	692.279	692.076	692.076
CIRC. Rampa	720.000	356586.583	4611632.123	-1000.000	692.298	692.298	69.501993	0.000	0.950	0.00	0.00	692.298	692.068	692.068
CIRC. Rampa	740.000	356604.238	4611641.519	-1000.000	692.317	692.317	68.228754	0.000	0.950	0.00	0.00	692.317	692.096	692.096
CIRC. Rampa	760.000	356621.702	4611651.266	-1000.000	692.336	692.336	66.955514	0.000	0.950	0.00	0.00	692.336	692.143	692.143
RECTA Rampa	762.125	356623.546	4611652.322	0.000	692.338	692.338	66.820203	0.000	0.950	0.00	0.00	692.338	692.145	692.145
RECTA Rampa	780.000	356639.048	4611661.222	0.000	692.355	692.355	66.820203	0.000	0.950	0.00	0.00	692.355	692.161	692.161
CIRC. Rampa	786.380	356644.581	4611664.399	260.000	692.361	692.361	66.820203	0.000	0.950	0.00	0.00	692.361	692.171	692.171
CIRC. Rampa	800.000	356656.564	4611670.868	260.000	692.374	692.374	70.155081	0.000	0.950	0.00	0.00	692.374	692.210	692.210
RECTA Rampa	814.865	356670.011	4611677.202	0.000	692.388	692.388	73.794945	0.000	0.950	0.00	0.00	692.388	692.267	692.267
RECTA Rampa	820.000	356674.716	4611679.256	0.000	692.393	692.393	73.794945	0.000	0.950	0.00	0.00	692.393	692.276	692.276

Istram 20.08.08.26 11/02/21 08:50:18 200009 pagina 2
PROYECTO : ESTUDIO INFORMATIVO DE LA INTEGRACION DEL FFCC EN VALLADOLID
GRUPO : 1 : EJES ANCHO 1435 ALTERNATIVA 2
EJE : 35 : VIA 4 UIC

* * * PUNTOS DEL EJE EN PLANTA * * *

TIPO	P.K.	X	Y	RADIO	Z RAS IZ.	Z RAS DR.	AZIMUT	DIST. EJE	PEN(o/oo)	PERAL_I	PERAL_D	HILO BAJO	ZT (eje)	Z TERR.
RECTA Rampa	840.000	356693.046	4611687.258	0.000	692.412	692.412	73.794945	0.000	0.950	0.00	0.00	692.412	692.279	692.279
RECTA Rampa	860.000	356711.375	4611695.260	0.000	692.431	692.431	73.794945	0.000	0.950	0.00	0.00	692.431	692.278	692.278
CIRC. KV 2917004	879.370	356729.127	4611703.010	-290.000	692.450	692.450	73.794945	0.000	0.953	0.00	0.00	692.450	692.298	692.298
CIRC. KV 2917004	880.000	356729.704	4611703.263	-290.000	692.450	692.450	73.656580	0.000	0.953	0.00	0.00	692.450	692.298	692.298
CIRC. KV 2917004	900.000	356747.725	4611711.930	-290.000	692.469	692.469	69.266099	0.000	0.960	0.00	0.00	692.469	692.320	692.320
RECTA Rampa	911.142	356757.491	4611717.290	0.000	692.480	692.480	66.820201	0.000	0.960	0.00	0.00	692.480	692.318	692.318
RECTA Rampa	913.629	356759.648	4611718.529	0.000	692.483	692.483	66.820201	0.000	0.960	0.00	0.00	692.483	692.309	692.309

Istram 20.08.08.26 11/02/21 08:50:41 200009 pagina 1
PROYECTO : ESTUDIO INFORMATIVO DE LA INTEGRACION DEL FFCC EN VALLADOLID
GRUPO : 1 : EJES ANCHO 1435 ALTERNATIVA 2
EJE : 38 : VIA 5 UIC

* * * PUNTOS DEL EJE EN PLANTA * * *

TIPO	P.K.	X	Y	RADIO	Z RAS IZ.	Z RAS DR.	AZIMUT	DIST. EJE	PEN(o/oo)	PERAL_I	PERAL_D	HILO BAJO	ZT (eje)	Z TERR.
RECTA Pendiente	0.000	355969.625	4611365.773	0.000	692.112	692.112	87.744529	0.000	-0.977	0.00	0.00	692.112	691.955	691.955
RECTA KV -14303	20.000	355989.255	4611369.599	0.000	692.083	692.083	87.744529	0.000	-2.131	0.00	0.00	692.083	691.834	691.834
CIRC. KV -14303	25.103	355994.265	4611370.576	-500.000	692.071	692.071	87.744529	0.000	-2.488	0.00	0.00	692.071	691.834	691.834
CIRC. Pendiente	40.000	356008.841	4611373.643	-500.000	692.029	692.029	85.847843	0.000	-2.900	0.00	0.00	692.029	691.835	691.835
CIRC. Pendiente	60.000	356028.256	4611378.441	-500.000	691.971	691.971	83.301364	0.000	-2.900	0.00	0.00	691.971	691.869	691.869
CIRC. KV 11496	80.000	356047.463	4611384.012	-500.000	691.929	691.929	80.754885	0.000	-1.215	0.00	0.00	691.929	691.857	691.857
CIRC. Pendiente	100.000	356066.432	4611390.347	-500.000	691.916	691.916	78.208406	0.000	-0.508	0.00	0.00	691.916	691.848	691.848
CIRC. Pendiente	120.000	356085.132	4611397.435	-500.000	691.906	691.906	75.661926	0.000	-0.508	0.00	0.00	691.906	691.808	691.808
RECTA Pendiente	134.663	356098.654	4611403.104	0.000	691.899	691.899	73.795002	0.000	-0.508	0.00	0.00	691.899	691.777	691.777
RECTA Pendiente	140.000	356103.546	4611405.239	0.000	691.896	691.896	73.795002	0.000	-0.508	0.00	0.00	691.896	691.765	691.765
RECTA Pendiente	160.000	356121.875	4611413.241	0.000	691.886	691.886	73.795002	0.000	-0.508	0.00	0.00	691.886	691.738	691.738
RECTA Pendiente	180.000	356140.205	4611421.243	0.000	691.876	691.876	73.795002	0.000	-0.508	0.00	0.00	691.876	691.762	691.762
RECTA Pendiente	200.000	356158.534	4611429.245	0.000	691.866	691.866	73.795002	0.000	-0.508	0.00	0.00	691.866	691.773	691.773
RECTA Pendiente	220.000	356176.863	4611437.247	0.000	691.855	691.855	73.795002	0.000	-0.508	0.00	0.00	691.855	691.784	691.784
RECTA Pendiente	240.000	356195.193	4611445.249	0.000	691.845	691.845	73.795002	0.000	-0.508	0.00	0.00	691.845	691.794	691.794
RECTA Pendiente	260.000	356213.522	4611453.251	0.000	691.835	691.835	73.795002	0.000	-0.508	0.00	0.00	691.835	691.802	691.802
RECTA Pendiente	280.000	356231.852	4611461.253	0.000	691.825	691.825	73.795002	0.000	-0.508	0.00	0.00	691.825	691.811	691.811
RECTA Pendiente	300.000	356250.181	4611469.255	0.000	691.815	691.815	73.795002	0.000	-0.508	0.00	0.00	691.815	691.819	691.819
RECTA KV 38700	320.000	356268.510	4611477.257	0.000	691.806	691.806	73.795002	0.000	-0.218	0.00	0.00	691.806	691.828	691.828
RECTA KV 38700	340.000	356286.840	4611485.259	0.000	691.807	691.807	73.795002	0.000	0.298	0.00	0.00	691.807	691.840	691.840
RECTA KV 38700	360.000	356305.169	4611493.261	0.000	691.818	691.818	73.795002	0.000	0.815	0.00	0.00	691.818	691.858	691.858
RECTA KV 38700	380.000	356323.499	4611501.263	0.000	691.840	691.840	73.795002	0.000	1.332	0.00	0.00	691.840	691.875	691.875
RECTA KV 38700	400.000	356341.828	4611509.265	0.000	691.871	691.871	73.795002	0.000	1.849	0.00	0.00	691.871	691.893	691.893
RECTA KV 38700	420.000	356360.158	4611517.267	0.000	691.914	691.914	73.795002	0.000	2.366	0.00	0.00	691.914	691.914	691.914
RECTA Rampa	440.000	356378.487	4611525.269	0.000	691.963	691.963	73.795002	0.000	2.475	0.00	0.00	691.963	691.939	691.939
RECTA Rampa	460.000	356396.816	4611533.271	0.000	692.012	692.012	73.795002	0.000	2.475	0.00	0.00	692.012	691.964	691.964
RECTA Rampa	480.000	356415.146	4611541.273	0.000	692.062	692.062	73.795002	0.000	2.475	0.00	0.00	692.062	691.973	691.973
RECTA Rampa	500.000	356433.475	4611549.276	0.000	692.111	692.111	73.795002	0.000	2.475	0.00	0.00	692.111	691.998	691.998
RECTA Rampa	520.000	356451.805	4611557.278	0.000	692.161	692.161	73.795002	0.000	2.475	0.00	0.00	692.161	691.943	691.943
RECTA KV -14599	540.000	356470.134	4611565.280	0.000	692.205	692.205	73.795002	0.000	1.646	0.00	0.00	692.205	692.003	692.003
RECTA Rampa	560.000	356488.464	4611573.282	0.000	692.225	692.225	73.795002	0.000	0.394	0.00	0.00	692.225	692.009	692.009
CIRC. Rampa	573.089	356500.459	4611578.518	-600.000	692.230	692.230	73.795002	0.000	0.394	0.00	0.00	692.230	692.070	692.070
CIRC. Rampa	580.000	356506.777	4611581.320	-600.000	692.233	692.233	73.061674	0.000	0.394	0.00	0.00	692.233	692.102	692.102
CIRC. Rampa	600.000	356524.873	4611589.835	-600.000	692.240	692.240	70.939608	0.000	0.394	0.00	0.00	692.240	692.040	692.040
CIRC. KV 72764	620.000	356542.675	4611598.948	-600.000	692.249	692.249	68.817542	0.000	0.502	0.00	0.00	692.249	692.000	692.000
CIRC. KV 72764	640.000	356560.163	4611608.650	-600.000	692.262	692.262	66.695476	0.000	0.777	0.00	0.00	692.262	692.019	692.019
RECTA KV 72764	651.594	356570.150	4611614.539	0.000	692.271	692.271	65.465298	0.000	0.936	0.00	0.00	692.271	692.046	692.046
RECTA Rampa	660.000	356577.349	4611618.879	0.000	692.280	692.280	65.465298	0.000	1.020	0.00	0.00	692.280	692.065	692.065
RECTA Rampa	680.000	356594.478	4611629.204	0.000	692.300	692.300	65.465298	0.000	1.020	0.00	0.00	692.300	692.116	692.116
RECTA Rampa	700.000	356611.606	4611639.529	0.000	692.321	692.321	65.465298	0.000	1.020	0.00	0.00	692.321	692.122	692.122
RECTA KV -393045	720.000	356628.735	4611649.854	0.000	692.341	692.341	65.465298	0.000	1.016	0.00	0.00	692.341	692.116	692.116
RECTA KV -393045	740.000	356645.864	4611660.179	0.000	692.361	692.361	65.465298	0.000	0.965	0.00	0.00	692.361	692.149	692.149
CIRC. Rampa	748.560	356653.195	4611664.598	850.000	692.369	692.369	65.465298	0.000	0.950	0.00	0.00	692.369	692.195	692.195
CIRC. Rampa	760.000	356663.032	4611670.438	850.000	692.380	692.380	66.322088	0.000	0.950	0.00	0.00	692.380	692.257	692.257
RECTA Rampa	766.650	356668.786	4611673.772	0.000	692.386	692.386	66.820169	0.000	0.950	0.00	0.00	692.386	692.267	692.267
RECTA Rampa	772.753	356674.079	4611676.810	0.000	692.392	692.392	66.820169	0.000	0.950	0.00	0.00	692.392	692.276	692.276

Istram 20.08.08.26 11/02/21 08:49:40 200009 pagina 1
PROYECTO : ESTUDIO INFORMATIVO DE LA INTEGRACION DEL FFCC EN VALLADOLID
GRUPO : 1 : EJES ANCHO 1435 ALTERNATIVA 2
EJE : 39 : VIA 3 UIC

* * * PUNTOS DEL EJE EN PLANTA * * *

TIPO	P.K.	X	Y	RADIO	Z RAS IZ.	Z RAS DR.	AZIMUT	DIST. EJE	PEN(o/oo)	PERAL_I	PERAL_D	HILO BAJO	ZT (eje)	Z TERR.
RECTA Pendiente	0.000	355921.798	4611357.114	0.000	692.159	692.159	80.769647	0.000	-1.000	0.00	0.00	692.159	691.996	691.996
RECTA Pendiente	20.000	355940.892	4611363.064	0.000	692.139	692.139	80.769647	0.000	-1.000	0.00	0.00	692.139	691.605	691.605
RECTA Pendiente	40.000	355959.987	4611369.014	0.000	692.119	692.119	80.769647	0.000	-1.000	0.00	0.00	692.119	692.000	692.000
RECTA Pendiente	60.000	355979.081	4611374.964	0.000	692.099	692.099	80.769647	0.000	-1.000	0.00	0.00	692.099	692.004	692.004
RECTA Pendiente	80.000	355998.175	4611380.913	0.000	692.079	692.079	80.769647	0.000	-1.000	0.00	0.00	692.079	691.923	691.923
CIRC. Pendiente	80.628	355998.775	4611381.100	-750.000	692.078	692.078	80.769647	0.000	-1.000	0.00	0.00	692.078	691.921	691.921
CIRC. KV -16522	100.000	356017.193	4611387.101	-750.000	692.057	692.057	79.125308	0.000	-1.451	0.00	0.00	692.057	691.878	691.878
CIRC. Pendiente	120.000	356036.040	4611393.794	-750.000	692.016	692.016	77.427655	0.000	-2.634	0.00	0.00	692.016	691.875	691.875
CIRC. Pendiente	140.000	356054.701	4611400.987	-750.000	691.963	691.963	75.730003	0.000	-2.634	0.00	0.00	691.963	691.888	691.888
CIRC. KV 12731	160.000	356073.164	4611408.675	-750.000	691.918	691.918	74.032350	0.000	-1.598	0.00	0.00	691.918	691.874	691.874
RECTA KV 12731	162.796	356075.728	4611409.789	0.000	691.913	691.913	73.795053	0.000	-1.378	0.00	0.00	691.913	691.867	691.867
RECTA Pendiente	180.000	356091.495	4611416.672	0.000	691.900	691.900	73.795053	0.000	-0.513	0.00	0.00	691.900	691.826	691.826
RECTA Pendiente	200.000	356109.825	4611424.674	0.000	691.890	691.890	73.795053	0.000	-0.513	0.00	0.00	691.890	691.779	691.779
RECTA Pendiente	220.000	356128.154	4611432.676	0.000	691.879	691.879	73.795053	0.000	-0.513	0.00	0.00	691.879	691.753	691.753
RECTA Pendiente	240.000	356146.483	4611440.678	0.000	691.869	691.869	73.795053	0.000	-0.513	0.00	0.00	691.869	691.760	691.760
RECTA Pendiente	260.000	356164.813	4611448.680	0.000	691.859	691.859	73.795053	0.000	-0.513	0.00	0.00	691.859	691.757	691.757
RECTA Pendiente	280.000	356183.142	4611456.682	0.000	691.849	691.849	73.795053	0.000	-0.513	0.00	0.00	691.849	691.747	691.747
RECTA KV 39998	300.000	356201.472	4611464.684	0.000	691.838	691.838	73.795053	0.000	-0.501	0.00	0.00	691.838	691.737	691.737
RECTA KV 39998	320.000	356219.801	4611472.686	0.000	691.833	691.833	73.795053	0.000	-0.001	0.00	0.00	691.833	691.737	691.737
RECTA KV 39998	340.000	356238.131	4611480.688	0.000	691.838	691.838	73.795053	0.000	0.499	0.00	0.00	691.838	691.741	691.741
RECTA Rampa	360.000	356256.460	4611488.690	0.000	691.853	691.853	73.795053	0.000	0.904	0.00	0.00	691.853	691.699	691.699
RECTA Rampa	380.000	356274.789	4611496.692	0.000	691.871	691.871	73.795053	0.000	0.904	0.00	0.00	691.871	691.672	691.672
RECTA Rampa	400.000	356293.119	4611504.694	0.000	691.889	691.889	73.795053	0.000	0.904	0.00	0.00	691.889	691.693	691.693
RECTA Rampa	420.000	356311.448	4611512.696	0.000	691.907	691.907	73.795053	0.000	0.904	0.00	0.00	691.907	691.739	691.739
RECTA KV 40001	440.000	356329.778	4611520.698	0.000	691.925	691.925	73.795053	0.000	0.954	0.00	0.00	691.925	691.624	691.624
RECTA KV 40001	460.000	356348.107	4611528.700	0.000	691.950	691.950	73.795053	0.000	1.454	0.00	0.00	691.950	691.500	691.500
RECTA KV 40001	480.000	356366.437	4611536.702	0.000	691.984	691.984	73.795053	0.000	1.954	0.00	0.00	691.984	691.820	691.820
RECTA Rampa	500.000	356384.766	4611544.704	0.000	692.026	692.026	73.795053	0.000	2.146	0.00	0.00	692.026	691.889	691.889
RECTA Rampa	520.000	356403.095	4611552.706	0.000	692.069	692.069	73.795053	0.000	2.146	0.00	0.00	692.069	691.905	691.905
RECTA Rampa	540.000	356421.425	4611560.708	0.000	692.112	692.112	73.795053	0.000	2.146	0.00	0.00	692.112	691.976	691.976
RECTA Rampa	560.000	356439.754	4611568.710	0.000	692.155	692.155	73.795053	0.000	2.146	0.00	0.00	692.155	692.001	692.001
RECTA KV -14600	580.000	356458.084	4611576.712	0.000	692.197	692.197	73.795053	0.000	1.931	0.00	0.00	692.197	692.021	692.021
RECTA KV -14600	600.000	356476.413	4611584.714	0.000	692.222	692.222	73.795053	0.000	0.561	0.00	0.00	692.222	692.000	692.000
CIRC. Rampa	606.618	356482.479	4611587.362	-1000.000	692.225	692.225	73.795053	0.000	0.406	0.00	0.00	692.225	692.000	692.000
CIRC. Rampa	620.000	356494.706	4611592.798	-1000.000	692.230	692.230	72.943149	0.000	0.406	0.00	0.00	692.230	691.990	691.990
RECTA Rampa	630.522	356504.269	4611597.187	0.000	692.235	692.235	72.273328	0.000	0.406	0.00	0.00	692.235	692.038	692.038
RECTA KV 122200	640.000	356512.862	4611601.186	0.000	692.238	692.238	72.273328	0.000	0.418	0.00	0.00	692.238	692.031	692.031
RECTA KV 122200	660.000	356530.995	4611609.624	0.000	692.248	692.248	72.273328	0.000	0.582	0.00	0.00	692.248	692.049	692.049
CIRC. KV 122200	676.201	356545.684	4611616.459	-1000.000	692.259	692.259	72.273328	0.000	0.714	0.00	0.00	692.259	692.019	692.019
CIRC. KV 122200	680.000	356549.125	4611618.068	-1000.000	692.262	692.262	72.031465	0.000	0.745	0.00	0.00	692.262	692.023	692.023
CIRC. KV 122200	700.000	356567.140	4611626.755	-1000.000	692.278	692.278	70.758226	0.000	0.909	0.00	0.00	692.278	692.139	692.139
CIRC. Rampa	720.000	356584.977	4611635.801	-1000.000	692.297	692.297	69.484986	0.000	0.960	0.00	0.00	692.297	692.122	692.122
CIRC. Rampa	740.000	356602.630	4611645.201	-1000.000	692.317	692.317	68.211747	0.000	0.960	0.00	0.00	692.317	692.127	692.127
CIRC. Rampa	760.000	356620.091	4611654.953	-1000.000	692.336	692.336	66.938507	0.000	0.960	0.00	0.00	692.336	692.166	692.166
RECTA Rampa	761.858	356621.703	4611655.877	0.000	692.338	692.338	66.820201	0.000	0.960	0.00	0.00	692.338	692.169	692.169
RECTA Rampa	780.000	356637.436	4611664.910	0.000	692.355	692.355	66.820201	0.000	0.960	0.00	0.00	692.355	692.183	692.183
RECTA Rampa	782.224	356639.365	4611666.017	0.000	692.357	692.357	66.820201	0.000	0.960	0.00	0.00	692.357	692.184	692.184

Istram 20.08.08.26 11/02/21 08:51:41 200009 pagina 1
PROYECTO : ESTUDIO INFORMATIVO DE LA INTEGRACION DEL FFCC EN VALLADOLID
GRUPO : 1 : EJES ANCHO 1435 ALTERNATIVA 2
EJE : 62 : VIA M2 UIC ESTACION VALLADOLID

* * * PUNTOS DEL EJE EN PLANTA * * *

TIPO	P.K.	X	Y	RADIO	Z RAS IZ.	Z RAS DR.	AZIMUT	DIST. EJE	PEN(o/oo)	PERAL_I	PERAL_D	HILO BAJO	ZT (eje)	Z TERR.
RECTA Pendiente	0.000	356496.943	4611620.286	0.000	692.215	692.215	273.794871	0.000	-0.923	0.00	0.00	692.215	692.136	692.136
RECTA Pendiente	20.000	356478.614	4611612.284	0.000	692.197	692.197	273.794871	0.000	-0.923	0.00	0.00	692.197	692.127	692.127
CIRC. Pendiente	26.767	356472.412	4611609.577	25000.000	692.190	692.190	273.794871	0.000	-0.923	0.00	0.00	692.190	692.119	692.119
CIRC. Pendiente	40.000	356460.283	4611604.285	25000.000	692.178	692.178	273.828569	0.000	-0.923	0.00	0.00	692.178	692.108	692.108
CIRC. KV -14600	60.000	356441.946	4611596.300	25000.000	692.160	692.160	273.879499	0.000	-0.928	0.00	0.00	692.160	692.099	692.099
RECTA KV -14600	61.215	356440.832	4611595.816	0.000	692.158	692.158	273.882593	0.000	-1.012	0.00	0.00	692.158	692.098	692.098
RECTA KV -14600	80.000	356423.606	4611588.323	0.000	692.127	692.127	273.882593	0.000	-2.298	0.00	0.00	692.127	692.086	692.086
RECTA Pendiente	100.000	356405.265	4611580.347	0.000	692.078	692.078	273.882593	0.000	-2.475	0.00	0.00	692.078	692.024	692.024
RECTA Pendiente	120.000	356386.925	4611572.370	0.000	692.029	692.029	273.882593	0.000	-2.475	0.00	0.00	692.029	691.962	691.962
RECTA Pendiente	140.000	356368.584	4611564.393	0.000	691.979	691.979	273.882593	0.000	-2.475	0.00	0.00	691.979	691.913	691.913
RECTA Pendiente	160.000	356350.244	4611556.416	0.000	691.930	691.930	273.882593	0.000	-2.475	0.00	0.00	691.930	692.240	692.240
RECTA KV 38700	180.000	356331.904	4611548.439	0.000	691.884	691.884	273.882593	0.000	-2.019	0.00	0.00	691.884	692.057	692.057
RECTA KV 38700	200.000	356313.563	4611540.463	0.000	691.849	691.849	273.882593	0.000	-1.502	0.00	0.00	691.849	691.775	691.775
RECTA KV 38700	220.000	356295.223	4611532.486	0.000	691.824	691.824	273.882593	0.000	-0.985	0.00	0.00	691.824	691.759	691.759
RECTA KV 38700	240.000	356276.882	4611524.509	0.000	691.810	691.810	273.882593	0.000	-0.469	0.00	0.00	691.810	691.731	691.731
RECTA KV 38700	260.000	356258.542	4611516.532	0.000	691.805	691.805	273.882593	0.000	0.048	0.00	0.00	691.805	691.688	691.688
RECTA KV 38700	272.694	356246.901	4611511.469	0.000	691.808	691.808	273.882593	0.000	0.376	0.00	0.00	691.808	691.661	691.661

Istram 20.08.08.26 11/02/21 08:51:16 200009 pagina 1
PROYECTO : ESTUDIO INFORMATIVO DE LA INTEGRACION DEL FFCC EN VALLADOLID
GRUPO : 1 : EJES ANCHO 1435 ALTERNATIVA 2
EJE : 63 : VIA M1 UIC ESTACION VALLADOLID

* * * PUNTOS DEL EJE EN PLANTA * * *

TIPO	P.K.	X	Y	RADIO	Z RAS IZ.	Z RAS DR.	AZIMUT	DIST. EJE	PEN(o/oo)	PERAL_I	PERAL_D	HILO BAJO	ZT (eje)	Z TERR.
RECTA Pendiente	0.000	356577.242	4611647.542	0.000	692.296	692.296	280.769647	0.000	-0.959	0.00	0.00	692.296	692.125	692.125
RECTA Pendiente	20.000	356558.147	4611641.592	0.000	692.277	692.277	280.769647	0.000	-0.959	0.00	0.00	692.277	692.106	692.106
RECTA Pendiente	40.000	356539.053	4611635.642	0.000	692.258	692.258	280.769647	0.000	-0.959	0.00	0.00	692.258	692.142	692.142
RECTA Pendiente	60.000	356519.958	4611629.693	0.000	692.238	692.238	280.769647	0.000	-0.959	0.00	0.00	692.238	692.081	692.081
RECTA Pendiente	80.000	356500.864	4611623.743	0.000	692.219	692.219	280.769647	0.000	-0.959	0.00	0.00	692.219	692.143	692.143
CIRC. Pendiente	84.994	356496.096	4611622.257	-315.000	692.214	692.214	280.769647	0.000	-0.959	0.00	0.00	692.214	692.153	692.153
CIRC. Pendiente	100.000	356481.881	4611617.453	-315.000	692.200	692.200	277.736825	0.000	-0.959	0.00	0.00	692.200	692.131	692.131
RECTA Pendiente	119.016	356464.224	4611610.403	0.000	692.182	692.182	273.893734	0.000	-0.959	0.00	0.00	692.182	692.137	692.137
RECTA Pendiente	120.000	356463.321	4611610.010	0.000	692.181	692.181	273.893734	0.000	-0.959	0.00	0.00	692.181	692.137	692.137
RECTA Pendiente	140.000	356444.979	4611602.037	0.000	692.162	692.162	273.893734	0.000	-0.959	0.00	0.00	692.162	692.133	692.133
RECTA KV -14601	160.000	356426.638	4611594.063	0.000	692.137	692.137	273.893734	0.000	-1.823	0.00	0.00	692.137	692.117	692.117
RECTA Pendiente	180.000	356408.296	4611586.090	0.000	692.091	692.091	273.893734	0.000	-2.475	0.00	0.00	692.091	692.047	692.047
RECTA Pendiente	200.000	356389.954	4611578.116	0.000	692.041	692.041	273.893734	0.000	-2.475	0.00	0.00	692.041	691.986	691.986
RECTA Pendiente	220.000	356371.612	4611570.142	0.000	691.992	691.992	273.893734	0.000	-2.475	0.00	0.00	691.992	691.996	691.996
RECTA Pendiente	240.000	356353.270	4611562.169	0.000	691.942	691.942	273.893734	0.000	-2.475	0.00	0.00	691.942	691.897	691.897
RECTA KV 38700	260.000	356334.929	4611554.195	0.000	691.895	691.895	273.893734	0.000	-2.150	0.00	0.00	691.895	691.856	691.856
RECTA KV 38700	280.000	356316.587	4611546.222	0.000	691.857	691.857	273.893734	0.000	-1.633	0.00	0.00	691.857	691.839	691.839
RECTA KV 38700	300.000	356298.245	4611538.248	0.000	691.829	691.829	273.893734	0.000	-1.116	0.00	0.00	691.829	691.836	691.836
RECTA KV 38700	320.000	356279.903	4611530.275	0.000	691.812	691.812	273.893734	0.000	-0.600	0.00	0.00	691.812	691.812	691.812
RECTA KV 38700	340.000	356261.561	4611522.301	0.000	691.805	691.805	273.893734	0.000	-0.083	0.00	0.00	691.805	691.821	691.821
RECTA KV 38700	357.761	356245.273	4611515.220	0.000	691.808	691.808	273.893734	0.000	0.376	0.00	0.00	691.808	691.830	691.830

Istram 20.08.08.26 11/02/21 08:47:56 200009 pagina 1
PROYECTO : ESTUDIO INFORMATIVO DE LA INTEGRACION DEL FFCC EN VALLADOLID
GRUPO : 1 : EJES ANCHO 1435 ALTERNATIVA 2
EJE : 74 : VIA 1 UIC

* * * PUNTOS DEL EJE EN PLANTA * * *

TIPO	P.K.	X	Y	RADIO	Z RAS IZ.	Z RAS DR.	AZIMUT	DIST. EJE	PEN(o/oo)	PERAL_I	PERAL_D	HILO BAJO	ZT (eje)	Z TERR.
RECTA KV 130000	174874.848	354443.502	4607543.007	0.000	691.848	691.848	20.406167	0.000	-4.600	0.00	0.00	691.848	691.925	691.925
RECTA KV 130000	174880.000	354445.125	4607547.897	0.000	691.825	691.825	20.406167	0.000	-4.560	0.00	0.00	691.825	691.903	691.903
RECTA KV 130000	174900.000	354451.427	4607566.878	0.000	691.735	691.735	20.406167	0.000	-4.406	0.00	0.00	691.735	691.822	691.822
RECTA KV 130000	174920.000	354457.729	4607585.859	0.000	691.649	691.649	20.406167	0.000	-4.252	0.00	0.00	691.649	691.726	691.726
CIRC. KV 130000	174936.011	354462.773	4607601.055	650000.000	691.582	691.582	20.406167	0.000	-4.129	0.00	0.00	691.582	691.620	691.620
CIRC. KV 130000	174940.000	354464.030	4607604.840	650000.000	691.565	691.565	20.406558	0.000	-4.099	0.00	0.00	691.565	691.594	691.594
CIRC. KV 130000	174960.000	354470.332	4607623.822	650000.000	691.485	691.485	20.408516	0.000	-3.945	0.00	0.00	691.485	691.530	691.530
CIRC. KV 130000	174980.000	354476.635	4607642.803	650000.000	691.407	691.407	20.410475	0.000	-3.791	0.00	0.00	691.407	691.447	691.447
CIRC. KV 130000	175000.000	354482.938	4607661.783	650000.000	691.333	691.333	20.412434	0.000	-3.637	0.00	0.00	691.333	691.363	691.363
RECTA KV 130000	175016.965	354488.285	4607677.884	0.000	691.272	691.272	20.414096	0.000	-3.507	0.00	0.00	691.272	691.281	691.281
RECTA KV 130000	175020.000	354489.242	4607680.764	0.000	691.262	691.262	20.414096	0.000	-3.483	0.00	0.00	691.262	691.271	691.271
RECTA KV 130000	175040.000	354495.545	4607699.745	0.000	691.194	691.194	20.414096	0.000	-3.329	0.00	0.00	691.194	691.201	691.201
RECTA KV 130000	175060.000	354501.849	4607718.725	0.000	691.129	691.129	20.414096	0.000	-3.176	0.00	0.00	691.129	691.139	691.139
RECTA KV 130000	175080.000	354508.153	4607737.706	0.000	691.067	691.067	20.414096	0.000	-3.022	0.00	0.00	691.067	691.076	691.076
RECTA KV 130000	175100.000	354514.457	4607756.686	0.000	691.008	691.008	20.414096	0.000	-2.868	0.00	0.00	691.008	691.004	691.004
RECTA KV 130000	175120.000	354520.761	4607775.667	0.000	690.952	690.952	20.414096	0.000	-2.714	0.00	0.00	690.952	690.935	690.935
RECTA KV 130000	175140.000	354527.065	4607794.647	0.000	690.899	690.899	20.414096	0.000	-2.560	0.00	0.00	690.899	690.895	690.895
RECTA KV 130000	175160.000	354533.369	4607813.628	0.000	690.850	690.850	20.414096	0.000	-2.406	0.00	0.00	690.850	690.859	690.859
RECTA KV 130000	175180.000	354539.673	4607832.608	0.000	690.803	690.803	20.414096	0.000	-2.252	0.00	0.00	690.803	690.783	690.783
RECTA KV 130000	175200.000	354545.977	4607851.589	0.000	690.759	690.759	20.414096	0.000	-2.099	0.00	0.00	690.759	690.758	690.758
RECTA KV 130000	175220.000	354552.281	4607870.569	0.000	690.719	690.719	20.414096	0.000	-1.945	0.00	0.00	690.719	690.709	690.709
RECTA KV 130000	175240.000	354558.585	4607889.550	0.000	690.682	690.682	20.414096	0.000	-1.791	0.00	0.00	690.682	690.667	690.667
RECTA KV 130000	175260.000	354564.889	4607908.530	0.000	690.647	690.647	20.414096	0.000	-1.637	0.00	0.00	690.647	690.584	690.584
RECTA KV 130000	175280.000	354571.193	4607927.511	0.000	690.616	690.616	20.414096	0.000	-1.483	0.00	0.00	690.616	690.617	690.617
RECTA KV 130000	175300.000	354577.497	4607946.491	0.000	690.588	690.588	20.414096	0.000	-1.329	0.00	0.00	690.588	690.553	690.553
RECTA KV 130000	175320.000	354583.801	4607965.472	0.000	690.563	690.563	20.414096	0.000	-1.176	0.00	0.00	690.563	690.480	690.480
RECTA KV 130000	175340.000	354590.104	4607984.452	0.000	690.541	690.541	20.414096	0.000	-1.022	0.00	0.00	690.541	690.530	690.530
RECTA KV 130000	175360.000	354596.408	4608003.433	0.000	690.522	690.522	20.414096	0.000	-0.868	0.00	0.00	690.522	690.459	690.459
RECTA Pendiente	175380.000	354602.712	4608022.414	0.000	690.506	690.506	20.414096	0.000	-0.734	0.00	0.00	690.506	690.525	690.525
RECTA Pendiente	175400.000	354609.016	4608041.394	0.000	690.492	690.492	20.414096	0.000	-0.734	0.00	0.00	690.492	690.450	690.450
RECTA Pendiente	175420.000	354615.320	4608060.375	0.000	690.477	690.477	20.414096	0.000	-0.734	0.00	0.00	690.477	690.523	690.523
RECTA Pendiente	175440.000	354621.624	4608079.355	0.000	690.462	690.462	20.414096	0.000	-0.734	0.00	0.00	690.462	690.483	690.483
RECTA Pendiente	175460.000	354627.928	4608098.336	0.000	690.448	690.448	20.414096	0.000	-0.734	0.00	0.00	690.448	690.460	690.460
RECTA Pendiente	175480.000	354634.232	4608117.316	0.000	690.433	690.433	20.414096	0.000	-0.734	0.00	0.00	690.433	690.425	690.425
RECTA Pendiente	175500.000	354640.536	4608136.297	0.000	690.418	690.418	20.414096	0.000	-0.734	0.00	0.00	690.418	690.408	690.408
RECTA Pendiente	175520.000	354646.840	4608155.277	0.000	690.404	690.404	20.414096	0.000	-0.734	0.00	0.00	690.404	690.394	690.394
RECTA Pendiente	175540.000	354653.144	4608174.258	0.000	690.389	690.389	20.414096	0.000	-0.734	0.00	0.00	690.389	690.409	690.409
CIRC. Pendiente	175540.553	354653.318	4608174.783	-330000.000	690.388	690.388	20.414096	0.000	-0.734	0.00	0.00	690.388	690.410	690.410
CIRC. Pendiente	175560.000	354659.447	4608193.238	-330000.000	690.374	690.374	20.410344	0.000	-0.734	0.00	0.00	690.374	690.443	690.443
CIRC. Pendiente	175580.000	354665.749	4608212.220	-330000.000	690.360	690.360	20.406486	0.000	-0.734	0.00	0.00	690.360	690.270	690.270
CIRC. Pendiente	175600.000	354672.051	4608231.201	-330000.000	690.345	690.345	20.402627	0.000	-0.734	0.00	0.00	690.345	690.410	690.410
CIRC. Pendiente	175620.000	354678.350	4608250.183	-330000.000	690.330	690.330	20.398769	0.000	-0.734	0.00	0.00	690.330	690.412	690.412
CIRC. Pendiente	175624.339	354679.717	4608254.301	500000.000	690.327	690.327	20.397932	0.000	-0.734	0.00	0.00	690.327	690.400	690.400
CIRC. Pendiente	175640.000	354684.650	4608269.165	500000.000	690.315	690.315	20.399926	0.000	-0.734	0.00	0.00	690.315	690.348	690.348
CIRC. Pendiente	175660.000	354690.950	4608288.147	500000.000	690.301	690.301	20.402473	0.000	-0.734	0.00	0.00	690.301	690.288	690.288
CIRC. Pendiente	175680.000	354697.251	4608307.128	500000.000	690.286	690.286	20.405019	0.000	-0.734	0.00	0.00	690.286	690.260	690.260
CIRC. Pendiente	175700.000	354703.552	4608326.110	500000.000	690.271	690.271	20.407566	0.000	-0.734	0.00	0.00	690.271	690.293	690.293
CIRC. Pendiente	175720.000	354709.855	4608345.091	500000.000	690.257	690.257	20.410112	0.000	-0.734	0.00	0.00	690.257	690.274	690.274
CIRC. Pendiente	175740.000	354716.158	4608364.071	500000.000	690.242	690.242	20.412659	0.000	-0.734	0.00	0.00	690.242	690.257	690.257
CIRC. Pendiente	175760.000	354722.462	4608383.052	500000.000	690.227	690.227	20.415205	0.000	-0.734	0.00	0.00	690.227	690.215	690.215

Istram 20.08.08.26 11/02/21 08:47:56 200009 pagina 2

PROYECTO : ESTUDIO INFORMATIVO DE LA INTEGRACION DEL FFCC EN VALLADOLID
GRUPO : 1 : EJES ANCHO 1435 ALTERNATIVA 2
EJE : 74 : VIA 1 UIC

* * * PUNTOS DEL EJE EN PLANTA * * *

TIPO	P.K.	X	Y	RADIO	Z RAS IZ.	Z RAS DR.	AZIMUT	DIST. EJE	PEN(o/oo)	PERAL_I	PERAL_D	HILO BAJO	ZT (eje)	Z TERR.
RECTA Pendiente	175767.955	354724.969	4608390.602	0.000	690.222	690.222	20.416218	0.000	-0.734	0.00	0.00	690.222	690.215	690.215
RECTA Pendiente	175780.000	354728.766	4608402.032	0.000	690.213	690.213	20.416218	0.000	-0.734	0.00	0.00	690.213	690.205	690.205
RECTA Pendiente	175800.000	354735.071	4608421.013	0.000	690.198	690.198	20.416218	0.000	-0.734	0.00	0.00	690.198	690.190	690.190
RECTA Pendiente	175820.000	354741.375	4608439.993	0.000	690.183	690.183	20.416218	0.000	-0.734	0.00	0.00	690.183	690.075	690.075
RECTA Pendiente	175840.000	354747.680	4608458.973	0.000	690.169	690.169	20.416218	0.000	-0.734	0.00	0.00	690.169	690.110	690.110
RECTA Pendiente	175860.000	354753.985	4608477.954	0.000	690.154	690.154	20.416218	0.000	-0.734	0.00	0.00	690.154	690.059	690.059
RECTA Pendiente	175880.000	354760.289	4608496.934	0.000	690.139	690.139	20.416218	0.000	-0.734	0.00	0.00	690.139	690.054	690.054
RECTA Pendiente	175900.000	354766.594	4608515.914	0.000	690.125	690.125	20.416218	0.000	-0.734	0.00	0.00	690.125	690.011	690.011
RECTA Pendiente	175920.000	354772.898	4608534.895	0.000	690.110	690.110	20.416218	0.000	-0.734	0.00	0.00	690.110	689.955	689.955
RECTA Pendiente	175940.000	354779.203	4608553.875	0.000	690.095	690.095	20.416218	0.000	-0.734	0.00	0.00	690.095	689.986	689.986
RECTA Pendiente	175960.000	354785.507	4608572.855	0.000	690.081	690.081	20.416218	0.000	-0.734	0.00	0.00	690.081	689.991	689.991
RECTA Pendiente	175980.000	354791.812	4608591.835	0.000	690.066	690.066	20.416218	0.000	-0.734	0.00	0.00	690.066	689.974	689.974
RECTA Pendiente	176000.000	354798.116	4608610.816	0.000	690.051	690.051	20.416218	0.000	-0.734	0.00	0.00	690.051	689.972	689.972
RECTA Pendiente	176020.000	354804.421	4608629.796	0.000	690.037	690.037	20.416218	0.000	-0.734	0.00	0.00	690.037	689.956	689.956
RECTA Pendiente	176040.000	354810.726	4608648.776	0.000	690.022	690.022	20.416218	0.000	-0.734	0.00	0.00	690.022	689.934	689.934
RECTA Pendiente	176060.000	354817.030	4608667.757	0.000	690.007	690.007	20.416218	0.000	-0.734	0.00	0.00	690.007	689.908	689.908
CIRC. Pendiente	176063.188	354818.035	4608670.782	-500000.000	690.005	690.005	20.416218	0.000	-0.734	0.00	0.00	690.005	689.904	689.904
CIRC. Pendiente	176080.000	354823.334	4608686.737	-500000.000	689.992	689.992	20.414077	0.000	-0.734	0.00	0.00	689.992	689.882	689.882
CIRC. Pendiente	176100.000	354829.638	4608705.718	-500000.000	689.978	689.978	20.411531	0.000	-0.734	0.00	0.00	689.978	689.878	689.878
CIRC. Pendiente	176120.000	354835.941	4608724.699	-500000.000	689.963	689.963	20.408984	0.000	-0.734	0.00	0.00	689.963	689.927	689.927
CIRC. Pendiente	176140.000	354842.243	4608743.680	-500000.000	689.948	689.948	20.406438	0.000	-0.734	0.00	0.00	689.948	689.944	689.944
CIRC. Pendiente	176160.000	354848.544	4608762.661	-500000.000	689.934	689.934	20.403891	0.000	-0.734	0.00	0.00	689.934	689.939	689.939
CIRC. Pendiente	176180.000	354854.845	4608781.643	-500000.000	689.919	689.919	20.401345	0.000	-0.734	0.00	0.00	689.919	689.958	689.958
CIRC. Pendiente	176200.000	354861.144	4608800.625	-500000.000	689.904	689.904	20.398798	0.000	-0.734	0.00	0.00	689.904	689.846	689.846
CIRC. Pendiente	176220.000	354867.443	4608819.607	-500000.000	689.890	689.890	20.396252	0.000	-0.734	0.00	0.00	689.890	689.851	689.851
RECTA Pendiente	176221.683	354867.973	4608821.204	0.000	689.888	689.888	20.396038	0.000	-0.734	0.00	0.00	689.888	689.857	689.857
RECTA Pendiente	176240.000	354873.742	4608838.589	0.000	689.875	689.875	20.396038	0.000	-0.734	0.00	0.00	689.875	689.895	689.895
RECTA Pendiente	176260.000	354880.040	4608857.572	0.000	689.860	689.860	20.396038	0.000	-0.734	0.00	0.00	689.860	689.877	689.877
RECTA Pendiente	176280.000	354886.339	4608876.554	0.000	689.846	689.846	20.396038	0.000	-0.734	0.00	0.00	689.846	689.838	689.838
RECTA KV 247395	176300.000	354892.638	4608895.536	0.000	689.831	689.831	20.396038	0.000	-0.714	0.00	0.00	689.831	689.844	689.844
RECTA KV 247395	176320.000	354898.936	4608914.519	0.000	689.818	689.818	20.396038	0.000	-0.633	0.00	0.00	689.818	689.859	689.859
RECTA KV 247395	176340.000	354905.235	4608933.501	0.000	689.806	689.806	20.396038	0.000	-0.552	0.00	0.00	689.806	689.836	689.836
RECTA KV 247395	176360.000	354911.533	4608952.483	0.000	689.795	689.795	20.396038	0.000	-0.471	0.00	0.00	689.795	689.829	689.829
RECTA KV 247395	176380.000	354917.832	4608971.466	0.000	689.787	689.787	20.396038	0.000	-0.391	0.00	0.00	689.787	689.842	689.842
RECTA KV 247395	176400.000	354924.130	4608990.448	0.000	689.780	689.780	20.396038	0.000	-0.310	0.00	0.00	689.780	689.844	689.844
RECTA KV 247395	176420.000	354930.429	4609009.430	0.000	689.774	689.774	20.396038	0.000	-0.229	0.00	0.00	689.774	689.858	689.858
RECTA KV 247395	176440.000	354936.727	4609028.412	0.000	689.771	689.771	20.396038	0.000	-0.148	0.00	0.00	689.771	689.834	689.834
RECTA KV 247395	176460.000	354943.026	4609047.395	0.000	689.769	689.769	20.396038	0.000	-0.067	0.00	0.00	689.769	689.844	689.844
RECTA KV 247395	176480.000	354949.325	4609066.377	0.000	689.768	689.768	20.396038	0.000	0.014	0.00	0.00	689.768	689.848	689.848
RECTA Rampa	176500.000	354955.623	4609085.359	0.000	689.769	689.769	20.396038	0.000	0.088	0.00	0.00	689.769	689.810	689.810
RECTA Rampa	176520.000	354961.922	4609104.342	0.000	689.771	689.771	20.396038	0.000	0.088	0.00	0.00	689.771	689.810	689.810
RECTA Rampa	176540.000	354968.220	4609123.324	0.000	689.773	689.773	20.396038	0.000	0.088	0.00	0.00	689.773	689.784	689.784
RECTA Rampa	176560.000	354974.519	4609142.306	0.000	689.774	689.774	20.396038	0.000	0.088	0.00	0.00	689.774	689.729	689.729
RECTA Rampa	176580.000	354980.817	4609161.289	0.000	689.776	689.776	20.396038	0.000	0.088	0.00	0.00	689.776	689.730	689.730
CIRC. Rampa	176597.922	354986.461	4609178.299	-150000.000	689.778	689.778	20.396038	0.000	0.088	0.00	0.00	689.778	689.708	689.708
CIRC. Rampa	176600.000	354987.116	4609180.271	-150000.000	689.778	689.778	20.395156	0.000	0.088	0.00	0.00	689.778	689.702	689.702
CIRC. Rampa	176620.000	354993.413	4609199.254	-150000.000	689.780	689.780	20.386668	0.000	0.088	0.00	0.00	689.780	689.654	689.654
CIRC. Rampa	176640.000	354999.707	4609218.237	-150000.000	689.781	689.781	20.378179	0.000	0.088	0.00	0.00	689.781	689.751	689.751
CIRC. Rampa	176660.000	355005.999	4609237.222	-150000.000	689.783	689.783	20.369691	0.000	0.088	0.00	0.00	689.783	689.769	689.769
CIRC. Rampa	176680.000	355012.289	4609256.207	-150000.000	689.785	689.785	20.361203	0.000	0.088	0.00	0.00	689.785	689.780	689.780

Istram 20.08.08.26 11/02/21 08:47:56 200009 pagina 3

PROYECTO : ESTUDIO INFORMATIVO DE LA INTEGRACION DEL FFCC EN VALLADOLID
GRUPO : 1 : EJES ANCHO 1435 ALTERNATIVA 2
EJE : 74 : VIA 1 UIC

* * * PUNTOS DEL EJE EN PLANTA * * *

TIPO	P.K.	X	Y	RADIO	Z RAS IZ.	Z RAS DR.	AZIMUT	DIST. EJE	PEN(o/oo)	PERAL_I	PERAL_D	HILO BAJO	ZT (eje)	Z TERR.
CIRC. Rampa	176687.719	355014.716	4609263.535	150000.000	689.786	689.786	20.357926	0.000	0.088	0.00	0.00	689.786	689.780	689.780
CIRC. Rampa	176700.000	355018.577	4609275.193	150000.000	689.787	689.787	20.363139	0.000	0.088	0.00	0.00	689.787	689.780	689.780
CIRC. Rampa	176720.000	355024.867	4609294.178	150000.000	689.788	689.788	20.371627	0.000	0.088	0.00	0.00	689.788	689.769	689.769
CIRC. Rampa	176740.000	355031.159	4609313.163	150000.000	689.790	689.790	20.380115	0.000	0.088	0.00	0.00	689.790	689.743	689.743
CIRC. Rampa	176760.000	355037.454	4609332.146	150000.000	689.792	689.792	20.388603	0.000	0.088	0.00	0.00	689.792	689.733	689.733
CIRC. Rampa	176780.000	355043.752	4609351.129	150000.000	689.794	689.794	20.397092	0.000	0.088	0.00	0.00	689.794	689.704	689.704
RECTA Rampa	176782.756	355044.620	4609353.745	0.000	689.794	689.794	20.398261	0.000	0.088	0.00	0.00	689.794	689.714	689.714
RECTA Rampa	176800.000	355050.051	4609370.111	0.000	689.795	689.795	20.398261	0.000	0.088	0.00	0.00	689.795	689.748	689.748
RECTA Rampa	176820.000	355056.350	4609389.093	0.000	689.797	689.797	20.398261	0.000	0.088	0.00	0.00	689.797	689.773	689.773
RECTA Rampa	176840.000	355062.649	4609408.075	0.000	689.799	689.799	20.398261	0.000	0.088	0.00	0.00	689.799	689.731	689.731
RECTA Rampa	176860.000	355068.949	4609427.057	0.000	689.801	689.801	20.398261	0.000	0.088	0.00	0.00	689.801	689.732	689.732
RECTA Rampa	176880.000	355075.248	4609446.039	0.000	689.802	689.802	20.398261	0.000	0.088	0.00	0.00	689.802	689.732	689.732
RECTA Rampa	176900.000	355081.547	4609465.021	0.000	689.804	689.804	20.398261	0.000	0.088	0.00	0.00	689.804	689.727	689.727
RECTA Rampa	176920.000	355087.846	4609484.003	0.000	689.806	689.806	20.398261	0.000	0.088	0.00	0.00	689.806	689.700	689.700
RECTA Rampa	176940.000	355094.145	4609502.986	0.000	689.808	689.808	20.398261	0.000	0.088	0.00	0.00	689.808	689.744	689.744
RECTA Rampa	176960.000	355100.445	4609521.968	0.000	689.809	689.809	20.398261	0.000	0.088	0.00	0.00	689.809	689.798	689.798
RECTA Rampa	176980.000	355106.744	4609540.950	0.000	689.811	689.811	20.398261	0.000	0.088	0.00	0.00	689.811	689.830	689.830
RECTA Rampa	177000.000	355113.043	4609559.932	0.000	689.813	689.813	20.398261	0.000	0.088	0.00	0.00	689.813	689.760	689.760
RECTA Rampa	177020.000	355119.342	4609578.914	0.000	689.815	689.815	20.398261	0.000	0.088	0.00	0.00	689.815	689.678	689.678
RECTA Rampa	177040.000	355125.641	4609597.896	0.000	689.816	689.816	20.398261	0.000	0.088	0.00	0.00	689.816	689.642	689.642
RECTA Rampa	177060.000	355131.941	4609616.878	0.000	689.818	689.818	20.398261	0.000	0.088	0.00	0.00	689.818	689.654	689.654
RECTA Rampa	177080.000	355138.240	4609635.860	0.000	689.820	689.820	20.398261	0.000	0.088	0.00	0.00	689.820	689.705	689.705
RECTA Rampa	177100.000	355144.539	4609654.842	0.000	689.822	689.822	20.398261	0.000	0.088	0.00	0.00	689.822	689.693	689.693
RECTA KV 227007	177120.000	355150.838	4609673.824	0.000	689.824	689.824	20.398261	0.000	0.111	0.00	0.00	689.824	689.675	689.675
RECTA KV 227007	177140.000	355157.138	4609692.806	0.000	689.827	689.827	20.398261	0.000	0.199	0.00	0.00	689.827	689.661	689.661
RECTA KV 227007	177160.000	355163.437	4609711.789	0.000	689.831	689.831	20.398261	0.000	0.287	0.00	0.00	689.831	689.679	689.679
RECTA KV 227007	177180.000	355169.736	4609730.771	0.000	689.838	689.838	20.398261	0.000	0.375	0.00	0.00	689.838	689.841	689.841
RECTA KV 227007	177200.000	355176.035	4609749.753	0.000	689.846	689.846	20.398261	0.000	0.463	0.00	0.00	689.846	689.846	689.846
RECTA KV 227007	177220.000	355182.334	4609768.735	0.000	689.857	689.857	20.398261	0.000	0.552	0.00	0.00	689.857	689.822	689.822
RECTA KV 227007	177240.000	355188.634	4609787.717	0.000	689.869	689.869	20.398261	0.000	0.640	0.00	0.00	689.869	689.801	689.801
RECTA KV 227007	177260.000	355194.933	4609806.699	0.000	689.882	689.882	20.398261	0.000	0.728	0.00	0.00	689.882	689.791	689.791
RECTA Rampa	177280.000	355201.232	4609825.681	0.000	689.898	689.898	20.398261	0.000	0.792	0.00	0.00	689.898	689.872	689.872
RECTA Rampa	177300.000	355207.531	4609844.663	0.000	689.913	689.913	20.398261	0.000	0.792	0.00	0.00	689.913	689.862	689.862
RECTA Rampa	177320.000	355213.830	4609863.645	0.000	689.929	689.929	20.398261	0.000	0.792	0.00	0.00	689.929	689.779	689.779
RECTA Rampa	177340.000	355220.130	4609882.627	0.000	689.945	689.945	20.398261	0.000	0.792	0.00	0.00	689.945	689.770	689.770
RECTA Rampa	177360.000	355226.429	4609901.610	0.000	689.961	689.961	20.398261	0.000	0.792	0.00	0.00	689.961	689.761	689.761
RECTA Rampa	177380.000	355232.728	4609920.592	0.000	689.977	689.977	20.398261	0.000	0.792	0.00	0.00	689.977	689.769	689.769
CIRC. Rampa	177399.144	355238.758	4609938.761	-300000.000	689.992	689.992	20.398261	0.000	0.792	0.00	0.00	689.992	689.806	689.806
CIRC. Rampa	177400.000	355239.027	4609939.574	-300000.000	689.993	689.993	20.398080	0.000	0.792	0.00	0.00	689.993	689.808	689.808
CIRC. Rampa	177420.000	355245.326	4609958.556	-300000.000	690.009	690.009	20.393835	0.000	0.792	0.00	0.00	690.009	689.831	689.831
CIRC. Rampa	177440.000	355251.623	4609977.539	-300000.000	690.024	690.024	20.389591	0.000	0.792	0.00	0.00	690.024	689.838	689.838
CIRC. Rampa	177460.000	355257.919	4609996.522	-300000.000	690.040	690.040	20.385347	0.000	0.792	0.00	0.00	690.040	689.846	689.846
CIRC. Rampa	177477.831	355263.531	4610013.447	370000.000	690.054	690.054	20.381563	0.000	0.792	0.00	0.00	690.054	689.847	689.847
CIRC. Rampa	177480.000	355264.214	4610015.506	370000.000	690.056	690.056	20.381937	0.000	0.792	0.00	0.00	690.056	689.848	689.848
CIRC. Rampa	177500.000	355270.509	4610034.489	370000.000	690.072	690.072	20.385378	0.000	0.792	0.00	0.00	690.072	696.965	696.965
CIRC. Rampa	177520.000	355276.805	4610053.472	370000.000	690.088	690.088	20.388819	0.000	0.792	0.00	0.00	690.088	690.060	690.060
RECTA Rampa	177533.229	355280.969	4610066.028	0.000	690.098	690.098	20.391095	0.000	0.792	0.00	0.00	690.098	690.026	690.026
RECTA Rampa	177540.000	355283.101	4610072.455	0.000	690.104	690.104	20.391095	0.000	0.792	0.00	0.00	690.104	690.019	690.019
RECTA Rampa	177560.000	355289.398	4610091.438	0.000	690.119	690.119	20.391095	0.000	0.792	0.00	0.00	690.119	690.003	690.003
RECTA Rampa	177580.000	355295.696	4610110.421	0.000	690.135	690.135	20.391095	0.000	0.792	0.00	0.00	690.135	689.979	689.979

Istram 20.08.08.26 11/02/21 08:47:56 200009 pagina 4

PROYECTO : ESTUDIO INFORMATIVO DE LA INTEGRACION DEL FFCC EN VALLADOLID
GRUPO : 1 : EJES ANCHO 1435 ALTERNATIVA 2
EJE : 74 : VIA 1 UIC

* * * PUNTOS DEL EJE EN PLANTA * * *

TIPO	P.K.	X	Y	RADIO	Z RAS IZ.	Z RAS DR.	AZIMUT	DIST. EJE	PEN(o/oo)	PERAL_I	PERAL_D	HILO BAJO	ZT (eje)	Z TERR.
RECTA Rampa	177600.000	355301.993	4610129.404	0.000	690.151	690.151	20.391095	0.000	0.792	0.00	0.00	690.151	689.972	689.972
RECTA Rampa	177620.000	355308.290	4610148.386	0.000	690.167	690.167	20.391095	0.000	0.792	0.00	0.00	690.167	689.994	689.994
RECTA Rampa	177640.000	355314.587	4610167.369	0.000	690.183	690.183	20.391095	0.000	0.792	0.00	0.00	690.183	689.977	689.977
RECTA Rampa	177660.000	355320.884	4610186.352	0.000	690.199	690.199	20.391095	0.000	0.792	0.00	0.00	690.199	689.970	689.970
RECTA Rampa	177680.000	355327.181	4610205.335	0.000	690.214	690.214	20.391095	0.000	0.792	0.00	0.00	690.214	690.022	690.022
RECTA Rampa	177700.000	355333.478	4610224.318	0.000	690.230	690.230	20.391095	0.000	0.792	0.00	0.00	690.230	690.060	690.060
RECTA Rampa	177720.000	355339.775	4610243.300	0.000	690.246	690.246	20.391095	0.000	0.792	0.00	0.00	690.246	690.068	690.068
RECTA Rampa	177740.000	355346.072	4610262.283	0.000	690.262	690.262	20.391095	0.000	0.792	0.00	0.00	690.262	690.069	690.069
RECTA Rampa	177760.000	355352.369	4610281.266	0.000	690.278	690.278	20.391095	0.000	0.792	0.00	0.00	690.278	690.170	690.170
RECTA Rampa	177780.000	355358.666	4610300.249	0.000	690.294	690.294	20.391095	0.000	0.792	0.00	0.00	690.294	690.180	690.180
RECTA Rampa	177800.000	355364.963	4610319.232	0.000	690.310	690.310	20.391095	0.000	0.792	0.00	0.00	690.310	690.174	690.174
RECTA Rampa	177820.000	355371.260	4610338.214	0.000	690.325	690.325	20.391095	0.000	0.792	0.00	0.00	690.325	690.208	690.208
RECTA Rampa	177840.000	355377.558	4610357.197	0.000	690.341	690.341	20.391095	0.000	0.792	0.00	0.00	690.341	690.250	690.250
RECTA Rampa	177860.000	355383.855	4610376.180	0.000	690.357	690.357	20.391095	0.000	0.792	0.00	0.00	690.357	690.235	690.235
RECTA Rampa	177880.000	355390.152	4610395.163	0.000	690.373	690.373	20.391095	0.000	0.792	0.00	0.00	690.373	690.245	690.245
RECTA Rampa	177900.000	355396.449	4610414.146	0.000	690.389	690.389	20.391095	0.000	0.792	0.00	0.00	690.389	690.308	690.308
RECTA Rampa	177920.000	355402.746	4610433.128	0.000	690.405	690.405	20.391095	0.000	0.792	0.00	0.00	690.405	690.346	690.346
RECTA Rampa	177940.000	355409.043	4610452.111	0.000	690.420	690.420	20.391095	0.000	0.792	0.00	0.00	690.420	690.357	690.357
CIRC. Rampa	177959.290	355415.116	4610470.420	100000.000	690.436	690.436	20.391095	0.000	0.792	0.00	0.00	690.436	690.376	690.376
CIRC. Rampa	177960.000	355415.340	4610471.094	100000.000	690.436	690.436	20.391547	0.000	0.792	0.00	0.00	690.436	690.378	690.378
CIRC. Rampa	177980.000	355421.639	4610490.076	100000.000	690.452	690.452	20.404280	0.000	0.792	0.00	0.00	690.452	690.465	690.465
CIRC. Rampa	178000.000	355427.942	4610509.057	100000.000	690.468	690.468	20.417012	0.000	0.792	0.00	0.00	690.468	690.514	690.514
CIRC. Rampa	178020.000	355434.249	4610528.037	100000.000	690.484	690.484	20.429744	0.000	0.792	0.00	0.00	690.484	690.537	690.537
CIRC. Rampa	178040.000	355440.559	4610547.015	100000.000	690.500	690.500	20.442477	0.000	0.792	0.00	0.00	690.500	690.511	690.511
CIRC. Rampa	178041.335	355440.981	4610548.282	-100000.000	690.501	690.501	20.443327	0.000	0.792	0.00	0.00	690.501	690.510	690.510
CIRC. Rampa	178060.000	355446.870	4610565.993	-100000.000	690.515	690.515	20.431445	0.000	0.792	0.00	0.00	690.515	690.497	690.497
CIRC. Rampa	178080.000	355453.177	4610584.973	-100000.000	690.531	690.531	20.418712	0.000	0.792	0.00	0.00	690.531	690.454	690.454
CIRC. Rampa	178100.000	355459.481	4610603.953	-100000.000	690.547	690.547	20.405980	0.000	0.792	0.00	0.00	690.547	690.423	690.423
CIRC. Rampa	178120.000	355465.780	4610622.935	-100000.000	690.563	690.563	20.393248	0.000	0.792	0.00	0.00	690.563	690.411	690.411
RECTA Rampa	178126.050	355467.685	4610628.677	0.000	690.568	690.568	20.389396	0.000	0.792	0.00	0.00	690.568	690.389	690.389
RECTA Rampa	178140.000	355472.077	4610641.918	0.000	690.579	690.579	20.389396	0.000	0.792	0.00	0.00	690.579	690.374	690.374
RECTA Rampa	178160.000	355478.374	4610660.901	0.000	690.595	690.595	20.389396	0.000	0.792	0.00	0.00	690.595	690.390	690.390
RECTA Rampa	178180.000	355484.670	4610679.884	0.000	690.611	690.611	20.389396	0.000	0.792	0.00	0.00	690.611	690.414	690.414
RECTA Rampa	178200.000	355490.967	4610698.867	0.000	690.626	690.626	20.389396	0.000	0.792	0.00	0.00	690.626	690.433	690.433
CIRC. Rampa	178209.392	355493.924	4610707.782	-40000.000	690.634	690.634	20.389396	0.000	0.792	0.00	0.00	690.634	690.446	690.446
CIRC. Rampa	178220.000	355497.262	4610717.850	-40000.000	690.642	690.642	20.372513	0.000	0.792	0.00	0.00	690.642	690.459	690.459
CIRC. Rampa	178240.000	355503.549	4610736.837	-40000.000	690.658	690.658	20.340682	0.000	0.792	0.00	0.00	690.658	690.506	690.506
CIRC. Rampa	178260.000	355509.826	4610755.826	-40000.000	690.674	690.674	20.308851	0.000	0.792	0.00	0.00	690.674	690.570	690.570
CIRC. Rampa	178265.722	355511.620	4610761.260	40000.000	690.678	690.678	20.299744	0.000	0.792	0.00	0.00	690.678	690.547	690.547
CIRC. Rampa	178280.000	355516.099	4610774.817	40000.000	690.690	690.690	20.322468	0.000	0.792	0.00	0.00	690.690	690.533	690.533
CIRC. KV 21470	178300.000	355522.380	4610793.805	40000.000	690.711	690.711	20.354299	0.000	1.488	0.00	0.00	690.711	690.526	690.526
CIRC. KV 21470	178320.000	355528.671	4610812.790	40000.000	690.750	690.750	20.386130	0.000	2.420	0.00	0.00	690.750	690.554	690.554
RECTA KV 21470	178328.738	355531.422	4610821.083	0.000	690.773	690.773	20.400037	0.000	2.827	0.00	0.00	690.773	690.613	690.613
RECTA KV 21470	178340.000	355534.970	4610831.772	0.000	690.808	690.808	20.400037	0.000	3.351	0.00	0.00	690.808	690.732	690.732
RECTA Rampa	178360.000	355541.270	4610850.754	0.000	690.878	690.878	20.400037	0.000	3.523	0.00	0.00	690.878	690.864	690.864
RECTA Rampa	178380.000	355547.569	4610869.736	0.000	690.948	690.948	20.400037	0.000	3.523	0.00	0.00	690.948	690.952	690.952
RECTA Rampa	178400.000	355553.869	4610888.718	0.000	691.019	691.019	20.400037	0.000	3.523	0.00	0.00	691.019	690.978	690.978
RECTA KV 188974	178420.000	355560.169	4610907.700	0.000	691.090	691.090	20.400037	0.000	3.618	0.00	0.00	691.090	691.020	691.020
RECTA Rampa	178440.000	355566.469	4610926.682	0.000	691.163	691.163	20.400037	0.000	3.689	0.00	0.00	691.163	691.007	691.007
RECTA Rampa	178460.000	355572.768	4610945.664	0.000	691.237	691.237	20.400037	0.000	3.689	0.00	0.00	691.237	691.191	691.191

Istram 20.08.08.26 11/02/21 08:47:56 200009 pagina 5

PROYECTO : ESTUDIO INFORMATIVO DE LA INTEGRACION DEL FFCC EN VALLADOLID
GRUPO : 1 : EJES ANCHO 1435 ALTERNATIVA 2
EJE : 74 : VIA 1 UIC

* * * PUNTOS DEL EJE EN PLANTA * * *

TIPO	P.K.	X	Y	RADIO	Z RAS IZ.	Z RAS DR.	AZIMUT	DIST. EJE	PEN(o/oo)	PERAL_I	PERAL_D	HILO BAJO	ZT (eje)	Z TERR.
RECTA Rampa	178480.000	355579.068	4610964.645	0.000	691.311	691.311	20.400037	0.000	3.689	0.00	0.00	691.311	691.255	691.255
CLOT. Rampa	178487.826	355581.533	4610972.073	1000000.000	691.340	691.340	20.400037	0.000	3.689	0.00	0.00	691.340	691.260	691.260
CLOT. Rampa	178500.000	355585.372	4610983.626	5976.169	691.385	691.385	20.464881	0.000	3.689	5.66	0.00	691.385	691.332	691.332
CLOT. Rampa	178520.000	355591.740	4611002.585	2261.294	691.458	691.458	20.852937	0.000	3.689	14.95	0.00	691.458	691.386	691.386
CLOT. Rampa	178540.000	355598.275	4611021.487	1394.470	691.532	691.532	21.590997	0.000	3.689	24.25	0.00	691.532	691.424	691.424
CLOT. Rampa	178560.000	355605.081	4611040.293	1008.053	691.606	691.606	22.679063	0.000	3.689	33.54	0.00	691.606	691.566	691.566
CLOT. Rampa	178580.000	355612.259	4611058.960	789.325	691.680	691.680	24.117134	0.000	3.689	42.83	0.00	691.680	691.610	691.610
CLOT. Rampa	178600.000	355619.907	4611077.439	648.593	691.753	691.753	25.905210	0.000	3.689	52.13	0.00	691.753	691.642	691.642
CLOT. Rampa	178620.000	355628.121	4611095.674	550.451	691.827	691.827	28.043292	0.000	3.689	61.42	0.00	691.827	691.727	691.727
CIRC. Rampa	178638.458	355636.283	4611112.228	483.000	691.895	691.895	30.327116	0.000	3.689	70.00	0.00	691.895	691.818	691.818
CIRC. Rampa	178640.000	355636.992	4611113.597	483.000	691.901	691.901	30.530338	0.000	3.689	70.00	0.00	691.901	691.825	691.825
CIRC. KV -36100	178660.000	355646.585	4611131.145	483.000	691.975	691.975	33.166445	0.000	3.651	70.00	0.00	691.975	691.845	691.845
CIRC. KV -36100	178680.000	355656.896	4611148.281	483.000	692.042	692.042	35.802552	0.000	3.097	70.00	0.00	692.042	691.920	691.920
CIRC. KV -36100	178700.000	355667.907	4611164.975	483.000	692.099	692.099	38.438658	0.000	2.543	70.00	0.00	692.099	691.988	691.988
CIRC. KV -36100	178720.000	355679.600	4611181.199	483.000	692.144	692.144	41.074765	0.000	1.989	70.00	0.00	692.144	691.936	691.936
CIRC. KV -36100	178740.000	355691.955	4611196.925	483.000	692.178	692.178	43.710872	0.000	1.435	70.00	0.00	692.178	691.971	691.971
CIRC. KV -36100	178760.000	355704.950	4611212.126	483.000	692.201	692.201	46.346979	0.000	0.881	70.00	0.00	692.201	692.138	692.138
CIRC. KV -36100	178780.000	355718.563	4611226.776	483.000	692.213	692.213	48.983085	0.000	0.327	70.00	0.00	692.213	692.100	692.100
CIRC. KV -36100	178800.000	355732.771	4611240.850	483.000	692.214	692.214	51.619192	0.000	-0.227	70.00	0.00	692.214	692.068	692.068
CIRC. Pendiente	178820.000	355747.549	4611254.324	483.000	692.206	692.206	54.255299	0.000	-0.476	70.00	0.00	692.206	692.125	692.125
CIRC. Pendiente	178840.000	355762.872	4611267.175	483.000	692.196	692.196	56.891406	0.000	-0.476	70.00	0.00	692.196	692.125	692.125
CIRC. KV 46862	178860.000	355778.714	4611279.380	483.000	692.187	692.187	59.527512	0.000	-0.363	70.00	0.00	692.187	692.125	692.125
CLOT. KV 46862	178874.900	355790.838	4611288.041	483.000	692.184	692.184	61.491376	0.000	-0.045	70.00	0.00	692.184	692.114	692.114
CLOT. KV 46862	178880.000	355795.049	4611290.919	462.842	692.184	692.184	62.178258	0.000	0.064	72.55	0.00	692.184	692.107	692.107
CIRC. KV 46862	178884.900	355799.123	4611293.639	445.000	692.185	692.185	62.865705	0.000	0.168	75.00	0.00	692.185	692.104	692.104
CIRC. Rampa	178900.000	355811.865	4611301.741	445.000	692.190	692.190	65.025960	0.000	0.431	75.00	0.00	692.190	692.106	692.106
CLOT. Rampa	178911.433	355821.692	4611307.585	445.000	692.195	692.195	66.661624	0.000	0.431	75.00	0.00	692.195	692.105	692.105
CLOT. Rampa	178920.000	355829.150	4611311.799	482.370	692.198	692.198	67.839700	0.000	0.431	69.86	0.00	692.198	696.502	696.502
CIRC. Rampa	178936.433	355843.657	4611319.519	575.000	692.205	692.205	69.833838	0.000	0.431	60.00	0.00	692.205	692.044	692.044
CIRC. Rampa	178940.000	355846.835	4611321.137	575.000	692.207	692.207	70.228723	0.000	0.431	60.00	0.00	692.207	692.055	692.055
CLOT. KV -29684	178957.211	355862.312	4611328.664	575.000	692.211	692.211	72.134230	0.000	-0.033	60.00	0.00	692.211	692.049	692.049
CLOT. KV -29684	178960.000	355864.841	4611329.840	633.942	692.211	692.211	72.428696	0.000	-0.127	54.42	0.00	692.211	692.039	692.039
CLOT. KV -29684	178980.000	355883.093	4611338.017	2392.283	692.202	692.202	73.699034	0.000	-0.801	14.42	0.00	692.202	691.972	691.972
RECTA Pendiente	178987.211	355889.700	4611340.905	0.000	692.195	692.195	73.794977	0.000	-1.001	0.00	0.00	692.195	691.961	691.961
RECTA Pendiente	179000.000	355901.421	4611346.022	0.000	692.182	692.182	73.794977	0.000	-1.001	0.00	0.00	692.182	691.957	691.957
RECTA Pendiente	179020.000	355919.750	4611354.024	0.000	692.162	692.162	73.794977	0.000	-1.001	0.00	0.00	692.162	691.987	691.987
RECTA Pendiente	179040.000	355938.080	4611362.026	0.000	692.142	692.142	73.794977	0.000	-1.001	0.00	0.00	692.142	691.560	691.560
RECTA Pendiente	179060.000	355956.409	4611370.028	0.000	692.122	692.122	73.794977	0.000	-1.001	0.00	0.00	692.122	691.990	691.990
RECTA Pendiente	179080.000	355974.739	4611378.030	0.000	692.102	692.102	73.794977	0.000	-1.001	0.00	0.00	692.102	692.054	692.054
RECTA KV -43502	179100.000	355993.068	4611386.032	0.000	692.082	692.082	73.794977	0.000	-1.046	0.00	0.00	692.082	692.001	692.001
RECTA KV -43502	179120.000	356011.397	4611394.034	0.000	692.057	692.057	73.794977	0.000	-1.506	0.00	0.00	692.057	691.966	691.966
RECTA KV -43502	179140.000	356029.727	4611402.036	0.000	692.022	692.022	73.794977	0.000	-1.965	0.00	0.00	692.022	691.945	691.945
RECTA Pendiente	179160.000	356048.056	4611410.039	0.000	691.982	691.982	73.794977	0.000	-2.013	0.00	0.00	691.982	691.913	691.913
RECTA KV 36302	179180.000	356066.386	4611418.041	0.000	691.942	691.942	73.794977	0.000	-1.815	0.00	0.00	691.942	691.881	691.881
RECTA KV 36302	179200.000	356084.715	4611426.043	0.000	691.911	691.911	73.794977	0.000	-1.264	0.00	0.00	691.911	691.849	691.849
RECTA KV 36302	179220.000	356103.045	4611434.045	0.000	691.892	691.892	73.794977	0.000	-0.713	0.00	0.00	691.892	691.817	691.817
RECTA Pendiente	179240.000	356121.374	4611442.047	0.000	691.881	691.881	73.794977	0.000	-0.512	0.00	0.00	691.881	691.792	691.792
RECTA Pendiente	179260.000	356139.703	4611450.049	0.000	691.870	691.870	73.794977	0.000	-0.512	0.00	0.00	691.870	691.779	691.779
RECTA Pendiente	179280.000	356158.033	4611458.051	0.000	691.860	691.860	73.794977	0.000	-0.512	0.00	0.00	691.860	691.812	691.812
RECTA Pendiente	179300.000	356176.362	4611466.053	0.000	691.850	691.850	73.794977	0.000	-0.512	0.00	0.00	691.850	691.845	691.845

Istram 20.08.08.26 11/02/21 08:47:56 200009 pagina 6

PROYECTO : ESTUDIO INFORMATIVO DE LA INTEGRACION DEL FFCC EN VALLADOLID
GRUPO : 1 : EJES ANCHO 1435 ALTERNATIVA 2
EJE : 74 : VIA 1 UIC

* * * PUNTOS DEL EJE EN PLANTA * * *

TIPO	P.K.	X	Y	RADIO	Z RAS IZ.	Z RAS DR.	AZIMUT	DIST. EJE	PEN(o/oo)	PERAL_I	PERAL_D	HILO BAJO	ZT (eje)	Z TERR.
RECTA Pendiente	179320.000	356194.692	4611474.055	0.000	691.840	691.840	73.794977	0.000	-0.512	0.00	0.00	691.840	691.878	691.878
RECTA KV 40000	179340.000	356213.021	4611482.057	0.000	691.833	691.833	73.794977	0.000	-0.062	0.00	0.00	691.833	691.789	691.789
RECTA KV 40000	179360.000	356231.350	4611490.059	0.000	691.837	691.837	73.794977	0.000	0.438	0.00	0.00	691.837	691.602	691.602
RECTA Rampa	179380.000	356249.680	4611498.061	0.000	691.851	691.851	73.794977	0.000	0.904	0.00	0.00	691.851	691.608	691.608
RECTA Rampa	179400.000	356268.009	4611506.063	0.000	691.869	691.869	73.794977	0.000	0.904	0.00	0.00	691.869	691.627	691.627
RECTA Rampa	179420.000	356286.339	4611514.065	0.000	691.887	691.887	73.794977	0.000	0.904	0.00	0.00	691.887	691.654	691.654
RECTA Rampa	179440.000	356304.668	4611522.067	0.000	691.905	691.905	73.794977	0.000	0.904	0.00	0.00	691.905	691.690	691.690
RECTA Rampa	179460.000	356322.998	4611530.069	0.000	691.923	691.923	73.794977	0.000	0.904	0.00	0.00	691.923	691.729	691.729
RECTA KV 40001	179480.000	356341.327	4611538.071	0.000	691.946	691.946	73.794977	0.000	1.393	0.00	0.00	691.946	691.768	691.768
RECTA KV 40001	179500.000	356359.656	4611546.073	0.000	691.979	691.979	73.794977	0.000	1.893	0.00	0.00	691.979	691.818	691.818
RECTA Rampa	179520.000	356377.986	4611554.075	0.000	692.020	692.020	73.794977	0.000	2.146	0.00	0.00	692.020	691.932	691.932
RECTA Rampa	179540.000	356396.315	4611562.077	0.000	692.063	692.063	73.794977	0.000	2.146	0.00	0.00	692.063	692.042	692.042
RECTA Rampa	179560.000	356414.645	4611570.079	0.000	692.106	692.106	73.794977	0.000	2.146	0.00	0.00	692.106	692.058	692.058
RECTA Rampa	179580.000	356432.974	4611578.081	0.000	692.149	692.149	73.794977	0.000	2.146	0.00	0.00	692.149	692.066	692.066
RECTA KV -14600	179600.000	356451.303	4611586.083	0.000	692.192	692.192	73.794977	0.000	2.100	0.00	0.00	692.192	692.112	692.112
RECTA KV -14600	179620.000	356469.633	4611594.085	0.000	692.220	692.220	73.794977	0.000	0.730	0.00	0.00	692.220	692.119	692.119
RECTA Rampa	179640.000	356487.962	4611602.087	0.000	692.229	692.229	73.794977	0.000	0.407	0.00	0.00	692.229	692.125	692.125
RECTA Rampa	179660.000	356506.292	4611610.089	0.000	692.238	692.238	73.794977	0.000	0.407	0.00	0.00	692.238	692.079	692.079
RECTA KV 97465	179680.000	356524.621	4611618.091	0.000	692.247	692.247	73.794977	0.000	0.546	0.00	0.00	692.247	692.016	692.016
RECTA KV 97465	179700.000	356542.951	4611626.093	0.000	692.260	692.260	73.794977	0.000	0.751	0.00	0.00	692.260	692.045	692.045
RECTA Rampa	179720.000	356561.280	4611634.095	0.000	692.277	692.277	73.794977	0.000	0.956	0.00	0.00	692.277	692.000	692.000
RECTA Rampa	179740.000	356579.609	4611642.097	0.000	692.296	692.296	73.794977	0.000	0.956	0.00	0.00	692.296	692.000	692.000
RECTA Rampa	179760.000	356597.939	4611650.099	0.000	692.315	692.315	73.794977	0.000	0.956	0.00	0.00	692.315	692.098	692.098
RECTA Rampa	179780.000	356616.268	4611658.101	0.000	692.334	692.334	73.794977	0.000	0.956	0.00	0.00	692.334	692.132	692.132
RECTA Rampa	179800.000	356634.598	4611666.103	0.000	692.353	692.353	73.794977	0.000	0.956	0.00	0.00	692.353	692.129	692.129
RECTA Rampa	179820.000	356652.927	4611674.105	0.000	692.372	692.372	73.794977	0.000	0.956	0.00	0.00	692.372	692.156	692.156
RECTA Rampa	179840.000	356671.256	4611682.107	0.000	692.391	692.391	73.794977	0.000	0.956	0.00	0.00	692.391	692.185	692.185
RECTA Rampa	179860.000	356689.586	4611690.110	0.000	692.410	692.410	73.794977	0.000	0.956	0.00	0.00	692.410	692.197	692.197
RECTA Rampa	179880.000	356707.915	4611698.112	0.000	692.430	692.430	73.794977	0.000	0.956	0.00	0.00	692.430	692.208	692.208
RECTA Rampa	179900.000	356726.245	4611706.114	0.000	692.449	692.449	73.794977	0.000	0.956	0.00	0.00	692.449	692.216	692.216
RECTA Rampa	179920.000	356744.574	4611714.116	0.000	692.468	692.468	73.794977	0.000	0.956	0.00	0.00	692.468	692.226	692.226
RECTA Rampa	179940.000	356762.904	4611722.118	0.000	692.487	692.487	73.794977	0.000	0.956	0.00	0.00	692.487	692.240	692.240
RECTA Rampa	179960.000	356781.233	4611730.120	0.000	692.506	692.506	73.794977	0.000	0.956	0.00	0.00	692.506	692.260	692.260
RECTA Rampa	179980.000	356799.562	4611738.122	0.000	692.525	692.525	73.794977	0.000	0.956	0.00	0.00	692.525	692.293	692.293
RECTA Rampa	180000.000	356817.892	4611746.124	0.000	692.544	692.544	73.794977	0.000	0.956	0.00	0.00	692.544	692.340	692.340
RECTA Rampa	180020.000	356836.221	4611754.126	0.000	692.563	692.563	73.794977	0.000	0.956	0.00	0.00	692.563	692.406	692.406
RECTA KV 15823	180040.000	356854.551	4611762.128	0.000	692.584	692.584	73.794977	0.000	1.454	0.00	0.00	692.584	692.480	692.480
CLOT. KV 15823	180058.084	356871.124	4611769.363	1000000.000	692.621	692.621	73.794977	0.000	2.597	0.00	0.00	692.621	692.497	692.497
CLOT. KV 15823	180060.000	356872.880	4611770.130	18792.536	692.626	692.626	73.798222	0.000	2.718	1.44	0.00	692.626	692.497	692.497
CIRC. KV 15823	180078.084	356889.469	4611777.331	1800.000	692.686	692.686	74.148655	0.000	3.861	15.00	0.00	692.686	692.500	692.500
CIRC. KV 15823	180080.000	356891.229	4611778.087	1800.000	692.693	692.693	74.216407	0.000	3.982	15.00	0.00	692.693	692.500	692.500
CIRC. Rampa	180100.000	356909.654	4611785.865	1800.000	692.785	692.785	74.923763	0.000	5.069	15.00	0.00	692.785	692.500	692.500
CIRC. Rampa	180120.000	356928.165	4611793.438	1800.000	692.887	692.887	75.631118	0.000	5.069	15.00	0.00	692.887	692.500	692.500
CLOT. Rampa	180126.948	356934.615	4611796.021	1800.000	692.922	692.922	75.876852	0.000	5.069	15.00	0.00	692.922	692.519	692.519
CLOT. Rampa	180140.000	356946.755	4611800.815	5181.362	692.988	692.988	76.187846	0.000	5.069	5.21	0.00	692.988	692.846	692.846
CLOT. Rampa	180146.948	356953.224	4611803.351	-1000000.000	693.023	693.023	76.230530	0.000	5.069	0.00	0.00	693.023	692.892	692.892
CLOT. Rampa	180160.000	356965.369	4611808.131	-1379.097	693.089	693.089	75.929276	0.000	5.069	0.00	22.84	693.089	692.976	692.976
CIRC. Rampa	180166.948	356971.818	4611810.715	-900.000	693.125	693.125	75.523175	0.000	5.069	0.00	35.00	693.125	693.004	693.004
CIRC. Rampa	180180.000	356983.882	4611815.698	-900.000	693.191	693.191	74.599933	0.000	5.069	0.00	35.00	693.191	693.074	693.074
CIRC. Rampa	180200.000	357002.223	4611823.671	-900.000	693.292	693.292	73.185223	0.000	5.069	0.00	35.00	693.292	693.136	693.136

Istram 20.08.08.26 11/02/21 08:47:56 200009 pagina 7

PROYECTO : ESTUDIO INFORMATIVO DE LA INTEGRACION DEL FFCC EN VALLADOLID
GRUPO : 1 : EJES ANCHO 1435 ALTERNATIVA 2
EJE : 74 : VIA 1 UIC

* * * PUNTOS DEL EJE EN PLANTA * * *

TIPO	P.K.	X	Y	RADIO	Z RAS IZ.	Z RAS DR.	AZIMUT	DIST. EJE	PEN(o/oo)	PERAL_I	PERAL_D	HILO BAJO	ZT (eje)	Z TERR.
CIRC. Rampa	180220.000	357020.382	4611832.051	-900.000	693.393	693.393	71.770512	0.000	5.069	0.00	35.00	693.393	693.242	693.242
CIRC. Rampa	180240.000	357038.351	4611840.832	-900.000	693.495	693.495	70.355801	0.000	5.069	0.00	35.00	693.495	693.305	693.305
CIRC. Rampa	180260.000	357056.121	4611850.009	-900.000	693.596	693.596	68.941091	0.000	5.069	0.00	35.00	693.596	693.415	693.415
CLOT. Rampa	180260.521	357056.581	4611850.254	-900.000	693.599	693.599	68.904209	0.000	5.069	0.00	35.00	693.599	693.404	693.404
CLOT. Rampa	180280.000	357073.685	4611859.575	-987.426	693.698	693.698	67.587376	0.000	5.069	0.00	35.00	693.698	693.579	693.579
CIRC. Rampa	180280.521	357074.140	4611859.829	-990.000	693.700	693.700	67.553803	0.000	5.069	0.00	35.00	693.700	693.581	693.581
CIRC. Rampa	180300.000	357091.048	4611869.499	-990.000	693.799	693.799	66.301232	0.000	5.069	0.00	35.00	693.799	693.654	693.654
CIRC. Rampa	180320.000	357108.208	4611879.772	-990.000	693.900	693.900	65.015131	0.000	5.069	0.00	35.00	693.900	693.754	693.754
CIRC. Rampa	180340.000	357125.157	4611890.389	-990.000	694.002	694.002	63.729031	0.000	5.069	0.00	35.00	694.002	693.888	693.888
CIRC. KV -77172	180360.000	357141.887	4611901.347	-990.000	694.101	694.101	62.442930	0.000	4.823	0.00	35.00	694.101	693.985	693.985
CIRC. KV -77172	180380.000	357158.393	4611912.640	-990.000	694.195	694.195	61.156830	0.000	4.564	0.00	35.00	694.195	694.081	694.081
CIRC. KV -77172	180400.000	357174.668	4611924.265	-990.000	694.283	694.283	59.870729	0.000	4.305	0.00	35.00	694.283	694.187	694.187
CLOT. KV -77172	180408.989	357181.905	4611929.596	-990.000	694.321	694.321	59.292692	0.000	4.188	0.00	35.00	694.321	694.212	694.212
CLOT. KV -77172	180420.000	357190.704	4611936.216	-984.384	694.367	694.367	58.582609	0.000	4.046	0.00	33.90	694.367	694.243	694.243
CLOT. KV -77172	180440.000	357206.494	4611948.490	-974.344	694.445	694.445	57.282507	0.000	3.787	0.00	31.90	694.445	694.315	694.315
CIRC. Rampa	180458.989	357221.250	4611960.442	-965.000	694.517	694.517	56.035792	0.000	3.768	0.00	30.00	694.517	694.385	694.385
CIRC. Rampa	180460.000	357222.029	4611961.086	-965.000	694.521	694.521	55.969095	0.000	3.768	0.00	30.00	694.521	694.391	694.391
CIRC. Rampa	180480.000	357237.299	4611974.001	-965.000	694.596	694.596	54.649675	0.000	3.768	0.00	30.00	694.596	694.498	694.498
CIRC. Rampa	180500.000	357252.299	4611987.229	-965.000	694.671	694.671	53.330256	0.000	3.768	0.00	30.00	694.671	694.540	694.540
CIRC. Rampa	180520.000	357267.022	4612000.765	-965.000	694.747	694.747	52.010837	0.000	3.768	0.00	30.00	694.747	694.553	694.553
CIRC. Rampa	180540.000	357281.461	4612014.604	-965.000	694.822	694.822	50.691418	0.000	3.768	0.00	30.00	694.822	694.676	694.676
CIRC. Rampa	180560.000	357295.610	4612028.739	-965.000	694.897	694.897	49.371999	0.000	3.768	0.00	30.00	694.897	694.773	694.773
CLOT. KV 76338	180578.349	357308.330	4612041.962	-965.000	694.967	694.967	48.161520	0.000	3.932	0.00	30.00	694.967	694.835	694.835
CLOT. KV 76338	180580.000	357309.463	4612043.164	-965.137	694.974	694.974	48.052587	0.000	3.953	0.00	30.00	694.974	694.839	694.839
CLOT. KV 76338	180600.000	357323.014	4612057.873	-966.798	695.056	695.056	46.734489	0.000	4.215	0.00	30.00	695.056	694.889	694.889
CLOT. KV 76338	180620.000	357336.258	4612072.859	-968.465	695.143	695.143	45.418657	0.000	4.477	0.00	30.00	695.143	694.943	694.943
CIRC. KV 76338	180638.349	357348.134	4612086.846	-970.000	695.227	695.227	44.213464	0.000	4.718	0.00	30.00	695.227	695.054	695.054
CIRC. KV 76338	180640.000	357349.189	4612088.115	-970.000	695.235	695.235	44.105085	0.000	4.739	0.00	30.00	695.235	695.064	695.064
CIRC. Rampa	180660.000	357361.804	4612103.635	-970.000	695.331	695.331	42.792467	0.000	4.816	0.00	30.00	695.331	695.149	695.149
CIRC. Rampa	180680.000	357374.095	4612119.412	-970.000	695.427	695.427	41.479849	0.000	4.816	0.00	30.00	695.427	695.307	695.307
CIRC. Rampa	180700.000	357386.059	4612135.438	-970.000	695.523	695.523	40.167231	0.000	4.816	0.00	30.00	695.523	695.480	695.480
CIRC. Rampa	180720.000	357397.690	4612151.708	-970.000	695.620	695.620	38.854613	0.000	4.816	0.00	30.00	695.620	695.517	695.517
CIRC. Rampa	180740.000	357408.983	4612168.214	-970.000	695.716	695.716	37.541995	0.000	4.816	0.00	30.00	695.716	695.615	695.615
CIRC. Rampa	180760.000	357419.933	4612184.950	-970.000	695.812	695.812	36.229376	0.000	4.816	0.00	30.00	695.812	695.752	695.752
CIRC. Rampa	180780.000	357430.536	4612201.908	-970.000	695.909	695.909	34.916758	0.000	4.816	0.00	30.00	695.909	695.864	695.864
CLOT. Rampa	180786.484	357433.898	4612207.452	-970.000	695.940	695.940	34.491194	0.000	4.816	0.00	30.00	695.940	695.904	695.904
CLOT. KV -107510	180800.000	357440.791	4612219.078	-1141.412	696.005	696.005	33.670747	0.000	4.727	0.00	25.49	696.005	696.003	696.003
CLOT. KV -107510	180820.000	357450.744	4612236.425	-1545.565	696.097	696.097	32.701098	0.000	4.541	0.00	18.83	696.097	696.009	696.009
CLOT. KV -107510	180840.000	357460.472	4612253.900	-2392.816	696.186	696.186	32.023143	0.000	4.355	0.00	12.16	696.186	696.152	696.152
CLOT. KV -107510	180860.000	357470.054	4612271.455	-5295.976	696.271	696.271	31.636880	0.000	4.169	0.00	5.49	696.271	696.264	696.264
RECTA KV -107510	180876.484	357477.898	4612285.954	0.000	696.339	696.339	31.537803	0.000	4.016	0.00	0.00	696.339	696.317	696.317
RECTA KV -107510	180880.000	357479.569	4612289.047	0.000	696.353	696.353	31.537803	0.000	3.983	0.00	0.00	696.353	696.317	696.317
RECTA Rampa	180900.000	357489.076	4612306.643	0.000	696.431	696.431	31.537803	0.000	3.886	0.00	0.00	696.431	696.399	696.399
RECTA Rampa	180920.000	357498.584	4612324.238	0.000	696.509	696.509	31.537803	0.000	3.886	0.00	0.00	696.509	696.547	696.547
RECTA Rampa	180940.000	357508.092	4612341.834	0.000	696.587	696.587	31.537803	0.000	3.886	0.00	0.00	696.587	696.559	696.559
RECTA Rampa	180960.000	357517.599	4612359.429	0.000	696.664	696.664	31.537803	0.000	3.886	0.00	0.00	696.664	696.690	696.690
RECTA Rampa	180980.000	357527.107	4612377.025	0.000	696.742	696.742	31.537803	0.000	3.886	0.00	0.00	696.742	696.740	696.740
RECTA Rampa	181000.000	357536.614	4612394.621	0.000	696.820	696.820	31.537803	0.000	3.886	0.00	0.00	696.820	696.798	696.798
CLOT. Rampa	181003.419	357538.240	4612397.629	1000000.000	696.833	696.833	31.537803	0.000	3.886	0.00	0.00	696.833	696.788	696.788
CIRC. KV -14671	181013.419	357542.994	4612406.426	95000.000	696.872	696.872	31.541154	0.000	3.792	0.00	0.00	696.872	696.761	696.761

Istram 20.08.08.26 11/02/21 08:47:57 200009 pagina 8

PROYECTO : ESTUDIO INFORMATIVO DE LA INTEGRACION DEL FFCC EN VALLADOLID
GRUPO : 1 : EJES ANCHO 1435 ALTERNATIVA 2
EJE : 74 : VIA 1 UIC

* * * PUNTOS DEL EJE EN PLANTA * * *

TIPO	P.K.	X	Y	RADIO	Z RAS IZ.	Z RAS DR.	AZIMUT	DIST. EJE	PEN(o/oo)	PERAL_I	PERAL_D	HILO BAJO	ZT (eje)	Z TERR.
CIRC. KV -14671	181020.000	357546.123	4612412.216	95000.000	696.895	696.895	31.545564	0.000	3.343	0.00	0.00	696.895	696.750	696.750
CIRC. KV -14671	181040.000	357555.634	4612429.809	95000.000	696.949	696.949	31.558966	0.000	1.980	0.00	0.00	696.949	696.730	696.730
CLOT. KV -14671	181055.660	357563.084	4612443.584	95000.000	696.971	696.971	31.569460	0.000	0.913	0.00	0.00	696.971	696.734	696.734
CLOT. KV -14671	181060.000	357565.149	4612447.401	167840.266	696.975	696.975	31.571738	0.000	0.617	0.00	0.00	696.975	696.739	696.739
RECTA KV -14671	181065.660	357567.843	4612452.379	0.000	696.977	696.977	31.572811	0.000	0.231	0.00	0.00	696.977	696.746	696.746
RECTA KV -14671	181080.000	357574.667	4612464.991	0.000	696.973	696.973	31.572811	0.000	-0.746	0.00	0.00	696.973	696.752	696.752
RECTA Pendiente	181100.000	357584.184	4612482.582	0.000	696.947	696.947	31.572811	0.000	-1.567	0.00	0.00	696.947	696.752	696.752
RECTA Pendiente	181120.000	357593.701	4612500.172	0.000	696.915	696.915	31.572811	0.000	-1.567	0.00	0.00	696.915	696.792	696.792
RECTA Pendiente	181140.000	357603.218	4612517.762	0.000	696.884	696.884	31.572811	0.000	-1.567	0.00	0.00	696.884	696.797	696.797
CLOT. Pendiente	181150.843	357608.378	4612527.299	-1000000.000	696.867	696.867	31.572811	0.000	-1.567	0.00	0.00	696.867	696.790	696.790
CLOT. Pendiente	181160.000	357612.736	4612535.353	-388753.503	696.853	696.853	31.572061	0.000	-1.567	0.00	0.00	696.853	696.854	696.854
CIRC. Pendiente	181170.843	357617.895	4612544.889	-178000.000	696.836	696.836	31.569235	0.000	-1.567	0.00	0.00	696.836	696.826	696.826
CIRC. Pendiente	181180.000	357622.252	4612552.944	-178000.000	696.821	696.821	31.565959	0.000	-1.567	0.00	0.00	696.821	696.814	696.814
CIRC. Pendiente	181200.000	357631.766	4612570.536	-178000.000	696.790	696.790	31.558806	0.000	-1.567	0.00	0.00	696.790	696.798	696.798
CLOT. KV 47094	181210.124	357636.581	4612579.441	-178000.000	696.774	696.774	31.555186	0.000	-1.516	0.00	0.00	696.774	696.790	696.790
CLOT. KV 47094	181220.000	357641.279	4612588.129	-351654.710	696.760	696.760	31.552525	0.000	-1.306	0.00	0.00	696.760	696.782	696.782
RECTA KV 47094	181230.124	357646.093	4612597.034	0.000	696.748	696.748	31.551609	0.000	-1.091	0.00	0.00	696.748	696.792	696.792
RECTA KV 47094	181240.000	357650.790	4612605.722	0.000	696.738	696.738	31.551609	0.000	-0.881	0.00	0.00	696.738	696.803	696.803
RECTA KV 47094	181260.000	357660.302	4612623.316	0.000	696.725	696.725	31.551609	0.000	-0.457	0.00	0.00	696.725	696.803	696.803
CLOT. KV 47094	181274.167	357667.039	4612635.778	1000000.000	696.721	696.721	31.551609	0.000	-0.156	0.00	0.00	696.721	696.810	696.810
CLOT. KV 47094	181280.000	357669.813	4612640.909	1000000.000	696.720	696.720	31.551625	0.000	-0.032	0.00	0.00	696.720	696.813	696.813
CLOT. KV 47094	181300.000	357679.324	4612658.503	1000000.000	696.724	696.724	31.551913	0.000	0.393	0.00	0.00	696.724	696.829	696.829
CLOT. KV 47094	181320.000	357688.836	4612676.096	1000000.000	696.736	696.736	31.552564	0.000	0.817	0.00	0.00	696.736	696.870	696.870
CIRC. KV 47094	181324.167	357690.817	4612679.762	1400000.000	696.740	696.740	31.552746	0.000	0.906	0.00	0.00	696.740	696.870	696.870
CIRC. Rampa	181340.000	357698.348	4612693.690	1400000.000	696.755	696.755	31.553466	0.000	0.981	0.00	0.00	696.755	696.875	696.875
CIRC. Rampa	181360.000	357707.860	4612711.283	1400000.000	696.775	696.775	31.554375	0.000	0.981	0.00	0.00	696.775	696.898	696.898
CIRC. Rampa	181380.000	357717.372	4612728.876	1400000.000	696.794	696.794	31.555285	0.000	0.981	0.00	0.00	696.794	696.882	696.882
CIRC. Rampa	181400.000	357726.885	4612746.469	1400000.000	696.814	696.814	31.556194	0.000	0.981	0.00	0.00	696.814	696.876	696.876
CIRC. Rampa	181420.000	357736.397	4612764.062	1400000.000	696.833	696.833	31.557104	0.000	0.981	0.00	0.00	696.833	696.871	696.871
CIRC. Rampa	181440.000	357745.910	4612781.654	1400000.000	696.853	696.853	31.558013	0.000	0.981	0.00	0.00	696.853	696.905	696.905
CIRC. Rampa	181460.000	357755.424	4612799.247	1400000.000	696.873	696.873	31.558923	0.000	0.981	0.00	0.00	696.873	696.942	696.942
CIRC. Rampa	181480.000	357764.937	4612816.839	1400000.000	696.892	696.892	31.559832	0.000	0.981	0.00	0.00	696.892	696.935	696.935
CIRC. Rampa	181500.000	357774.451	4612834.432	1400000.000	696.912	696.912	31.560742	0.000	0.981	0.00	0.00	696.912	696.928	696.928
CIRC. Rampa	181520.000	357783.965	4612852.024	1400000.000	696.931	696.931	31.561651	0.000	0.981	0.00	0.00	696.931	696.916	696.916
CIRC. Rampa	181540.000	357793.479	4612869.616	1400000.000	696.951	696.951	31.562561	0.000	0.981	0.00	0.00	696.951	696.900	696.900
CIRC. Rampa	181560.000	357802.994	4612887.208	1400000.000	696.971	696.971	31.563470	0.000	0.981	0.00	0.00	696.971	696.888	696.888
CIRC. KV -65205	181580.000	357812.509	4612904.799	1400000.000	696.990	696.990	31.564379	0.000	0.835	0.00	0.00	696.990	696.888	696.888
CIRC. KV -65205	181600.000	357822.024	4612922.391	1400000.000	697.003	697.003	31.565289	0.000	0.528	0.00	0.00	697.003	696.888	696.888
CIRC. KV -65205	181620.000	357831.539	4612939.982	1400000.000	697.011	697.011	31.566198	0.000	0.222	0.00	0.00	697.011	696.888	696.888
CIRC. KV -65205	181640.000	357841.055	4612957.574	1400000.000	697.012	697.012	31.567108	0.000	-0.085	0.00	0.00	697.012	696.880	696.880
CIRC. KV -65205	181660.000	357850.570	4612975.165	1400000.000	697.007	697.007	31.568017	0.000	-0.392	0.00	0.00	697.007	696.872	696.872
CIRC. Pendiente	181680.000	357860.086	4612992.756	1400000.000	696.997	696.997	31.568927	0.000	-0.553	0.00	0.00	696.997	696.870	696.870
CIRC. Pendiente	181700.000	357869.603	4613010.347	1400000.000	696.986	696.986	31.569836	0.000	-0.553	0.00	0.00	696.986	696.870	696.870
CIRC. Pendiente	181720.000	357879.119	4613027.938	1400000.000	696.975	696.975	31.570746	0.000	-0.553	0.00	0.00	696.975	696.870	696.870
CIRC. Pendiente	181740.000	357888.636	4613045.528	1400000.000	696.964	696.964	31.571655	0.000	-0.553	0.00	0.00	696.964	696.870	696.870
CIRC. Pendiente	181760.000	357898.153	4613063.119	1400000.000	696.953	696.953	31.572565	0.000	-0.553	0.00	0.00	696.953	696.858	696.858
CIRC. Pendiente	181780.000	357907.670	4613080.709	1400000.000	696.942	696.942	31.573474	0.000	-0.553	0.00	0.00	696.942	696.806	696.806
CIRC. Pendiente	181800.000	357917.188	4613098.299	1400000.000	696.931	696.931	31.574383	0.000	-0.553	0.00	0.00	696.931	696.803	696.803
CIRC. Pendiente	181820.000	357926.706	4613115.889	1400000.000	696.920	696.920	31.575293	0.000	-0.553	0.00	0.00	696.920	696.803	696.803
CIRC. Pendiente	181840.000	357936.224	4613133.479	1400000.000	696.909	696.909	31.576202	0.000	-0.553	0.00	0.00	696.909	696.802	696.802

Istram 20.08.08.26 11/02/21 08:47:57 200009 pagina 9

PROYECTO : ESTUDIO INFORMATIVO DE LA INTEGRACION DEL FFCC EN VALLADOLID
GRUPO : 1 : EJES ANCHO 1435 ALTERNATIVA 2
EJE : 74 : VIA 1 UIC

* * * PUNTOS DEL EJE EN PLANTA * * *

TIPO	P.K.	X	Y	RADIO	Z RAS IZ.	Z RAS DR.	AZIMUT	DIST. EJE	PEN(o/oo)	PERAL_I	PERAL_D	HILO BAJO	ZT (eje)	Z TERR.
CIRC. Pendiente	181860.000	357945.742	4613151.069	1400000.000	696.898	696.898	31.577112	0.000	-0.553	0.00	0.00	696.898	696.766	696.766
CIRC. Pendiente	181880.000	357955.261	4613168.659	1400000.000	696.887	696.887	31.578021	0.000	-0.553	0.00	0.00	696.887	696.725	696.725
CIRC. Pendiente	181900.000	357964.780	4613186.248	1400000.000	696.875	696.875	31.578931	0.000	-0.553	0.00	0.00	696.875	696.699	696.699
CIRC. Pendiente	181920.000	357974.299	4613203.838	1400000.000	696.864	696.864	31.579840	0.000	-0.553	0.00	0.00	696.864	696.699	696.699
CIRC. Pendiente	181940.000	357983.818	4613221.427	1400000.000	696.853	696.853	31.580750	0.000	-0.553	0.00	0.00	696.853	696.692	696.692
CIRC. Pendiente	181960.000	357993.338	4613239.016	1400000.000	696.842	696.842	31.581659	0.000	-0.553	0.00	0.00	696.842	696.662	696.662
CIRC. Pendiente	181980.000	358002.857	4613256.605	1400000.000	696.831	696.831	31.582569	0.000	-0.553	0.00	0.00	696.831	696.707	696.707
CIRC. Pendiente	182000.000	358012.377	4613274.194	1400000.000	696.820	696.820	31.583478	0.000	-0.553	0.00	0.00	696.820	696.757	696.757
CIRC. Pendiente	182020.000	358021.898	4613291.783	1400000.000	696.809	696.809	31.584387	0.000	-0.553	0.00	0.00	696.809	696.777	696.777
CIRC. Pendiente	182040.000	358031.418	4613309.371	1400000.000	696.798	696.798	31.585297	0.000	-0.553	0.00	0.00	696.798	696.770	696.770
CIRC. Pendiente	182060.000	358040.939	4613326.960	1400000.000	696.787	696.787	31.586206	0.000	-0.553	0.00	0.00	696.787	696.754	696.754
CIRC. KV 93917	182080.000	358050.460	4613344.548	1400000.000	696.776	696.776	31.587116	0.000	-0.492	0.00	0.00	696.776	696.750	696.750
CIRC. KV 93917	182100.000	358059.982	4613362.136	1400000.000	696.768	696.768	31.588025	0.000	-0.279	0.00	0.00	696.768	696.750	696.750
CIRC. KV 93917	182120.000	358069.503	4613379.724	1400000.000	696.765	696.765	31.588935	0.000	-0.066	0.00	0.00	696.765	696.750	696.750
CLOT. KV 93917	182125.309	358072.031	4613384.393	1000000.000	696.765	696.765	31.589176	0.000	-0.009	0.00	0.00	696.765	696.750	696.750
CLOT. KV 93917	182140.000	358079.025	4613397.312	1000000.000	696.766	696.766	31.589746	0.000	0.147	0.00	0.00	696.766	696.750	696.750
CLOT. Rampa	182160.000	358088.547	4613414.900	1000000.000	696.771	696.771	31.590206	0.000	0.299	0.00	0.00	696.771	696.772	696.772
RECTA Rampa	182175.309	358095.836	4613428.363	0.000	696.775	696.775	31.590313	0.000	0.299	0.00	0.00	696.775	696.774	696.774
RECTA Rampa	182180.000	358098.069	4613432.488	0.000	696.777	696.777	31.590313	0.000	0.299	0.00	0.00	696.777	696.770	696.770
RECTA Rampa	182200.000	358107.591	4613450.076	0.000	696.783	696.783	31.590313	0.000	0.299	0.00	0.00	696.783	696.758	696.758
RECTA Rampa	182220.000	358117.113	4613467.664	0.000	696.789	696.789	31.590313	0.000	0.299	0.00	0.00	696.789	696.771	696.771
RECTA Rampa	182240.000	358126.635	4613485.251	0.000	696.795	696.795	31.590313	0.000	0.299	0.00	0.00	696.795	696.782	696.782
RECTA KV -158129	182260.000	358136.157	4613502.839	0.000	696.800	696.800	31.590313	0.000	0.224	0.00	0.00	696.800	696.769	696.769
RECTA KV -158129	182280.000	358145.680	4613520.427	0.000	696.803	696.803	31.590313	0.000	0.098	0.00	0.00	696.803	696.750	696.750
RECTA KV -158129	182300.000	358155.202	4613538.015	0.000	696.804	696.804	31.590313	0.000	-0.029	0.00	0.00	696.804	696.777	696.777
RECTA KV -158129	182320.000	358164.724	4613555.602	0.000	696.802	696.802	31.590313	0.000	-0.155	0.00	0.00	696.802	696.769	696.769
RECTA Pendiente	182340.000	358174.246	4613573.190	0.000	696.798	696.798	31.590313	0.000	-0.207	0.00	0.00	696.798	696.727	696.727
RECTA Pendiente	182360.000	358183.768	4613590.778	0.000	696.794	696.794	31.590313	0.000	-0.207	0.00	0.00	696.794	696.703	696.703
RECTA Pendiente	182380.000	358193.290	4613608.366	0.000	696.790	696.790	31.590313	0.000	-0.207	0.00	0.00	696.790	696.689	696.689
RECTA Pendiente	182400.000	358202.812	4613625.953	0.000	696.786	696.786	31.590313	0.000	-0.207	0.00	0.00	696.786	696.671	696.671
RECTA Pendiente	182420.000	358212.334	4613643.541	0.000	696.782	696.782	31.590313	0.000	-0.207	0.00	0.00	696.782	696.695	696.695
RECTA Pendiente	182440.000	358221.856	4613661.129	0.000	696.778	696.778	31.590313	0.000	-0.207	0.00	0.00	696.778	696.677	696.677
RECTA Pendiente	182460.000	358231.378	4613678.717	0.000	696.773	696.773	31.590313	0.000	-0.207	0.00	0.00	696.773	696.715	696.715
RECTA KV 2713592	182480.000	358240.900	4613696.305	0.000	696.769	696.769	31.590313	0.000	-0.204	0.00	0.00	696.769	696.752	696.752
CLOT. KV 2713592	182498.166	358249.549	4613712.280	-1000000.000	696.766	696.766	31.590313	0.000	-0.197	0.00	0.00	696.766	696.779	696.779
CLOT. KV 2713592	182500.000	358250.422	4613713.892	-1000000.000	696.765	696.765	31.590284	0.000	-0.196	0.00	0.00	696.765	696.779	696.779
CLOT. KV 2713592	182520.000	358259.944	4613731.480	-171752.246	696.761	696.761	31.586267	0.000	-0.189	0.00	0.00	696.761	696.800	696.800
CIRC. KV 2713592	182523.166	358261.451	4613734.265	-150000.000	696.761	696.761	31.585008	0.000	-0.188	0.00	0.00	696.761	696.800	696.800
CIRC. KV 2713592	182540.000	358269.464	4613749.069	-150000.000	696.758	696.758	31.577863	0.000	-0.181	0.00	0.00	696.758	696.800	696.800
CIRC. Pendiente	182560.000	358278.981	4613766.660	-150000.000	696.754	696.754	31.569375	0.000	-0.178	0.00	0.00	696.754	696.800	696.800
CIRC. Pendiente	182580.000	358288.497	4613784.251	-150000.000	696.751	696.751	31.560887	0.000	-0.178	0.00	0.00	696.751	696.800	696.800
CIRC. Pendiente	182600.000	358298.009	4613801.844	-150000.000	696.747	696.747	31.552399	0.000	-0.178	0.00	0.00	696.747	696.800	696.800
CIRC. Pendiente	182620.000	358307.520	4613819.438	-150000.000	696.744	696.744	31.543910	0.000	-0.178	0.00	0.00	696.744	696.800	696.800
CIRC. Pendiente	182640.000	358317.028	4613837.033	-150000.000	696.740	696.740	31.535422	0.000	-0.178	0.00	0.00	696.740	696.800	696.800
CLOT. Pendiente	182645.330	358319.561	4613841.723	-150000.000	696.739	696.739	31.533160	0.000	-0.178	0.00	0.00	696.739	696.800	696.800
CLOT. Pendiente	182660.000	358326.534	4613854.630	-363017.820	696.736	696.736	31.528761	0.000	-0.178	0.00	0.00	696.736	696.816	696.816
CLOT. Pendiente	182670.330	358331.443	4613863.719	1000000.000	696.735	696.735	31.527855	0.000	-0.178	0.00	0.00	696.735	696.823	696.823
CLOT. Pendiente	182680.000	358336.039	4613872.227	400726.848	696.733	696.733	31.528623	0.000	-0.178	0.00	0.00	696.733	696.839	696.839
CIRC. Pendiente	182695.330	358343.325	4613885.715	155000.000	696.730	696.730	31.532989	0.000	-0.178	0.00	0.00	696.730	696.796	696.796
CIRC. Pendiente	182700.000	358345.544	4613889.824	155000.000	696.729	696.729	31.534907	0.000	-0.178	0.00	0.00	696.729	696.797	696.797

Istram 20.08.08.26 11/02/21 08:47:57 200009 pagina 10

PROYECTO : ESTUDIO INFORMATIVO DE LA INTEGRACION DEL FFCC EN VALLADOLID
GRUPO : 1 : EJES ANCHO 1435 ALTERNATIVA 2
EJE : 74 : VIA 1 UIC

* * * PUNTOS DEL EJE EN PLANTA * * *

TIPO	P.K.	X	Y	RADIO	Z RAS IZ.	Z RAS DR.	AZIMUT	DIST. EJE	PEN(o/oo)	PERAL_I	PERAL_D	HILO BAJO	ZT (eje)	Z TERR.
CIRC. KV 129644	182720.000	358355.052	4613907.419	155000.000	696.726	696.726	31.543121	0.000	-0.120	0.00	0.00	696.726	696.749	696.749
CIRC. KV 129644	182740.000	358364.563	4613925.013	155000.000	696.725	696.725	31.551336	0.000	0.034	0.00	0.00	696.725	704.144	704.144
CIRC. KV 129644	182760.000	358374.075	4613942.606	155000.000	696.727	696.727	31.559550	0.000	0.189	0.00	0.00	696.727	704.234	704.234
CIRC. KV 129644	182780.000	358383.590	4613960.198	155000.000	696.733	696.733	31.567765	0.000	0.343	0.00	0.00	696.733	696.651	696.651
CLOT. KV 129644	182787.571	358387.192	4613966.857	155000.000	696.736	696.736	31.570874	0.000	0.401	0.00	0.00	696.736	696.659	696.659
CLOT. Rampa	182800.000	358393.107	4613977.789	308254.871	696.741	696.741	31.574710	0.000	0.439	0.00	0.00	696.741	696.661	696.661
RECTA Rampa	182812.571	358399.089	4613988.845	0.000	696.746	696.746	31.576008	0.000	0.439	0.00	0.00	696.746	696.674	696.674
RECTA Rampa	182820.000	358402.625	4613995.379	0.000	696.750	696.750	31.576008	0.000	0.439	0.00	0.00	696.750	696.676	696.676
RECTA Rampa	182840.000	358412.143	4614012.968	0.000	696.758	696.758	31.576008	0.000	0.439	0.00	0.00	696.758	696.661	696.661
RECTA Rampa	182860.000	358421.661	4614030.558	0.000	696.767	696.767	31.576008	0.000	0.439	0.00	0.00	696.767	696.643	696.643
RECTA Rampa	182880.000	358431.179	4614048.148	0.000	696.776	696.776	31.576008	0.000	0.439	0.00	0.00	696.776	696.660	696.660
RECTA Rampa	182900.000	358440.697	4614065.738	0.000	696.785	696.785	31.576008	0.000	0.439	0.00	0.00	696.785	696.672	696.672
RECTA Rampa	182920.000	358450.215	4614083.328	0.000	696.794	696.794	31.576008	0.000	0.439	0.00	0.00	696.794	696.680	696.680
RECTA Rampa	182940.000	358459.734	4614100.918	0.000	696.802	696.802	31.576008	0.000	0.439	0.00	0.00	696.802	696.680	696.680
RECTA KV -3665400	182960.000	358469.252	4614118.508	0.000	696.811	696.811	31.576008	0.000	0.436	0.00	0.00	696.811	696.680	696.680
RECTA KV -3665400	182980.000	358478.770	4614136.098	0.000	696.820	696.820	31.576008	0.000	0.430	0.00	0.00	696.820	696.700	696.700
RECTA KV -3665400	183000.000	358488.288	4614153.688	0.000	696.828	696.828	31.576008	0.000	0.425	0.00	0.00	696.828	696.700	696.700
RECTA KV -3665400	183020.000	358497.806	4614171.278	0.000	696.837	696.837	31.576008	0.000	0.420	0.00	0.00	696.837	696.720	696.720
RECTA KV -3665400	183040.000	358507.324	4614188.868	0.000	696.845	696.845	31.576008	0.000	0.414	0.00	0.00	696.845	696.720	696.720
RECTA KV -3665400	183060.000	358516.842	4614206.458	0.000	696.853	696.853	31.576008	0.000	0.409	0.00	0.00	696.853	696.720	696.720
RECTA KV -3665400	183080.000	358526.360	4614224.047	0.000	696.862	696.862	31.576008	0.000	0.403	0.00	0.00	696.862	696.720	696.720
RECTA KV -3665400	183100.000	358535.879	4614241.637	0.000	696.870	696.870	31.576008	0.000	0.398	0.00	0.00	696.870	696.720	696.720
RECTA KV -3665400	183120.000	358545.397	4614259.227	0.000	696.877	696.877	31.576008	0.000	0.392	0.00	0.00	696.877	696.720	696.720
RECTA Rampa	183140.000	358554.915	4614276.817	0.000	696.885	696.885	31.576008	0.000	0.390	0.00	0.00	696.885	696.720	696.720
RECTA Rampa	183160.000	358564.433	4614294.407	0.000	696.893	696.893	31.576008	0.000	0.390	0.00	0.00	696.893	696.720	696.720
RECTA Rampa	183180.000	358573.951	4614311.997	0.000	696.901	696.901	31.576008	0.000	0.390	0.00	0.00	696.901	696.722	696.722
RECTA Rampa	183200.000	358583.469	4614329.587	0.000	696.909	696.909	31.576008	0.000	0.390	0.00	0.00	696.909	696.725	696.725
RECTA Rampa	183220.000	358592.987	4614347.177	0.000	696.916	696.916	31.576008	0.000	0.390	0.00	0.00	696.916	696.725	696.725
RECTA Rampa	183240.000	358602.506	4614364.767	0.000	696.924	696.924	31.576008	0.000	0.390	0.00	0.00	696.924	696.726	696.726
RECTA Rampa	183260.000	358612.024	4614382.357	0.000	696.932	696.932	31.576008	0.000	0.390	0.00	0.00	696.932	696.730	696.730
RECTA Rampa	183280.000	358621.542	4614399.947	0.000	696.940	696.940	31.576008	0.000	0.390	0.00	0.00	696.940	696.726	696.726
RECTA Rampa	183300.000	358631.060	4614417.536	0.000	696.948	696.948	31.576008	0.000	0.390	0.00	0.00	696.948	696.721	696.721
RECTA Rampa	183320.000	358640.578	4614435.126	0.000	696.956	696.956	31.576008	0.000	0.390	0.00	0.00	696.956	696.730	696.730
RECTA Rampa	183340.000	358650.096	4614452.716	0.000	696.963	696.963	31.576008	0.000	0.390	0.00	0.00	696.963	696.726	696.726
RECTA Rampa	183360.000	358659.614	4614470.306	0.000	696.971	696.971	31.576008	0.000	0.390	0.00	0.00	696.971	696.724	696.724
RECTA Rampa	183380.000	358669.133	4614487.896	0.000	696.979	696.979	31.576008	0.000	0.390	0.00	0.00	696.979	696.720	696.720
RECTA Rampa	183400.000	358678.651	4614505.486	0.000	696.987	696.987	31.576008	0.000	0.390	0.00	0.00	696.987	696.775	696.775
CLOT. Rampa	183400.624	358678.948	4614506.035	1000000.000	696.987	696.987	31.576008	0.000	0.390	0.00	0.00	696.987	696.775	696.775
CLOT. Rampa	183420.000	358688.169	4614523.076	1000000.000	696.995	696.995	31.576307	0.000	0.390	0.00	0.00	696.995	696.775	696.775
CLOT. Rampa	183440.000	358697.687	4614540.666	1000000.000	697.002	697.002	31.577242	0.000	0.390	0.00	0.00	697.002	696.773	696.773
CIRC. Rampa	183440.624	358697.984	4614541.215	1000000.000	697.003	697.003	31.577281	0.000	0.390	0.00	0.00	697.003	696.773	696.773
CIRC. Rampa	183460.000	358707.206	4614558.255	1000000.000	697.010	697.010	31.578515	0.000	0.390	0.00	0.00	697.010	696.803	696.803
CIRC. Rampa	183480.000	358716.725	4614575.845	1000000.000	697.018	697.018	31.579788	0.000	0.390	0.00	0.00	697.018	696.842	696.842
CIRC. Rampa	183500.000	358726.244	4614593.434	1000000.000	697.026	697.026	31.581061	0.000	0.390	0.00	0.00	697.026	696.844	696.844
CIRC. Rampa	183520.000	358735.764	4614611.023	1000000.000	697.034	697.034	31.582335	0.000	0.390	0.00	0.00	697.034	696.861	696.861
CIRC. Rampa	183540.000	358745.284	4614628.612	1000000.000	697.041	697.041	31.583608	0.000	0.390	0.00	0.00	697.041	696.868	696.868
CIRC. Rampa	183560.000	358754.804	4614646.201	1000000.000	697.049	697.049	31.584881	0.000	0.390	0.00	0.00	697.049	696.872	696.872
CIRC. Rampa	183580.000	358764.325	4614663.789	1000000.000	697.057	697.057	31.586154	0.000	0.390	0.00	0.00	697.057	696.884	696.884
CIRC. Rampa	183600.000	358773.846	4614681.378	1000000.000	697.065	697.065	31.587428	0.000	0.390	0.00	0.00	697.065	696.903	696.903
CLOT. Rampa	183600.037	358773.864	4614681.410	1000000.000	697.065	697.065	31.587430	0.000	0.390	0.00	0.00	697.065	696.903	696.903

Istram 20.08.08.26 11/02/21 08:47:57 200009 pagina 11

PROYECTO : ESTUDIO INFORMATIVO DE LA INTEGRACION DEL FFCC EN VALLADOLID
GRUPO : 1 : EJES ANCHO 1435 ALTERNATIVA 2
EJE : 74 : VIA 1 UIC

* * * PUNTOS DEL EJE EN PLANTA * * *

TIPO	P.K.	X	Y	RADIO	Z RAS IZ.	Z RAS DR.	AZIMUT	DIST. EJE	PEN(o/oo)	PERAL_I	PERAL_D	HILO BAJO	ZT (eje)	Z TERR.
CLOT. Rampa	183620.000	358783.368	4614698.966	1000000.000	697.073	697.073	31.588384	0.000	0.390	0.00	0.00	697.073	696.904	696.904
CLOT. Rampa	183640.000	358792.889	4614716.554	1000000.000	697.080	697.080	31.588703	0.000	0.390	0.00	0.00	697.080	696.914	696.914
RECTA Rampa	183640.037	358792.907	4614716.586	0.000	697.080	697.080	31.588703	0.000	0.390	0.00	0.00	697.080	696.913	696.913
RECTA Rampa	183660.000	358802.411	4614734.142	0.000	697.088	697.088	31.588703	0.000	0.390	0.00	0.00	697.088	696.892	696.892
RECTA Rampa	183680.000	358811.933	4614751.730	0.000	697.096	697.096	31.588703	0.000	0.390	0.00	0.00	697.096	696.881	696.881
RECTA Rampa	183700.000	358821.454	4614769.318	0.000	697.104	697.104	31.588703	0.000	0.390	0.00	0.00	697.104	696.882	696.882
RECTA Rampa	183720.000	358830.976	4614786.906	0.000	697.112	697.112	31.588703	0.000	0.390	0.00	0.00	697.112	696.841	696.841
RECTA Rampa	183740.000	358840.497	4614804.494	0.000	697.119	697.119	31.588703	0.000	0.390	0.00	0.00	697.119	696.858	696.858
RECTA Rampa	183760.000	358850.019	4614822.082	0.000	697.127	697.127	31.588703	0.000	0.390	0.00	0.00	697.127	696.900	696.900
RECTA Rampa	183780.000	358859.541	4614839.670	0.000	697.135	697.135	31.588703	0.000	0.390	0.00	0.00	697.135	696.929	696.929
RECTA Rampa	183800.000	358869.062	4614857.258	0.000	697.143	697.143	31.588703	0.000	0.390	0.00	0.00	697.143	696.950	696.950
CLOT. Rampa	183813.543	358875.510	4614869.168	1000000.000	697.148	697.148	31.588703	0.000	0.390	0.00	0.00	697.148	696.950	696.950
CLOT. Rampa	183820.000	358878.584	4614874.846	162621.576	697.151	697.151	31.589967	0.000	0.390	0.65	0.00	697.151	696.950	696.950
CLOT. Rampa	183840.000	358888.108	4614892.432	39687.478	697.159	697.159	31.609923	0.000	0.390	2.65	0.00	697.159	696.950	696.950
CLOT. Rampa	183860.000	358897.641	4614910.014	22601.688	697.166	697.166	31.654130	0.000	0.390	4.65	0.00	697.166	696.966	696.966
CIRC. Rampa	183863.543	358899.332	4614913.128	21000.000	697.168	697.168	31.664491	0.000	0.390	5.00	0.00	697.168	696.969	696.969
CIRC. Rampa	183880.000	358907.189	4614927.588	21000.000	697.174	697.174	31.714380	0.000	0.390	5.00	0.00	697.174	696.975	696.975
CIRC. Rampa	183900.000	358916.754	4614945.153	21000.000	697.182	697.182	31.775011	0.000	0.390	5.00	0.00	697.182	697.010	697.010
CIRC. Rampa	183920.000	358926.335	4614962.708	21000.000	697.190	697.190	31.835641	0.000	0.390	5.00	0.00	697.190	697.044	697.044
CIRC. Rampa	183940.000	358935.934	4614980.255	21000.000	697.198	697.198	31.896271	0.000	0.390	5.00	0.00	697.198	697.071	697.071
CIRC. Rampa	183960.000	358945.548	4614997.792	21000.000	697.205	697.205	31.956902	0.000	0.390	5.00	0.00	697.205	697.091	697.091
CIRC. Rampa	183980.000	358955.180	4615015.320	21000.000	697.213	697.213	32.017532	0.000	0.390	5.00	0.00	697.213	697.099	697.099
CIRC. Rampa	184000.000	358964.828	4615032.839	21000.000	697.221	697.221	32.078163	0.000	0.390	5.00	0.00	697.221	697.100	697.100
CIRC. Rampa	184020.000	358974.493	4615050.348	21000.000	697.229	697.229	32.138793	0.000	0.390	5.00	0.00	697.229	697.100	697.100
CIRC. Rampa	184040.000	358984.175	4615067.849	21000.000	697.237	697.237	32.199424	0.000	0.390	5.00	0.00	697.237	697.101	697.101
CIRC. Rampa	184060.000	358993.873	4615085.340	21000.000	697.244	697.244	32.260054	0.000	0.390	5.00	0.00	697.244	697.104	697.104
CLOT. Rampa	184079.449	359003.320	4615102.341	21000.000	697.252	697.252	32.319015	0.000	0.390	5.00	0.00	697.252	697.107	697.107
CLOT. Rampa	184080.000	359003.588	4615102.822	21233.944	697.252	697.252	32.320675	0.000	0.390	4.94	0.00	697.252	697.107	697.107
CLOT. Rampa	184100.000	359013.318	4615120.296	35654.707	697.260	697.260	32.368512	0.000	0.390	2.94	0.00	697.260	697.110	697.110
CLOT. Rampa	184120.000	359023.058	4615137.764	111121.374	697.268	697.268	32.392096	0.000	0.390	0.94	0.00	697.268	697.114	697.114
CLOT. Rampa	184129.449	359027.662	4615146.016	-1000000.000	697.272	697.272	32.394803	0.000	0.390	0.00	0.00	697.272	697.115	697.115
CLOT. Rampa	184140.000	359032.802	4615155.230	-99517.833	697.276	697.276	32.391428	0.000	0.390	1.06	0.00	697.276	697.117	697.117
CLOT. Rampa	184160.000	359042.542	4615172.698	-34368.904	697.283	697.283	32.366508	0.000	0.390	3.06	0.00	697.283	697.120	697.120
CIRC. Rampa	184179.449	359052.003	4615189.690	-21000.000	697.291	697.291	32.319015	0.000	0.390	5.00	0.00	697.291	697.124	697.124
CIRC. Rampa	184180.000	359052.271	4615190.172	-21000.000	697.291	697.291	32.317345	0.000	0.390	5.00	0.00	697.291	697.124	697.124
CIRC. Rampa	184200.000	359061.985	4615207.654	-21000.000	697.299	697.299	32.256714	0.000	0.390	5.00	0.00	697.299	697.127	697.127
CIRC. Rampa	184220.000	359071.682	4615225.146	-21000.000	697.307	697.307	32.196084	0.000	0.390	5.00	0.00	697.307	697.130	697.130
CIRC. Rampa	184240.000	359081.363	4615242.647	-21000.000	697.315	697.315	32.135453	0.000	0.390	5.00	0.00	697.315	697.130	697.130
CIRC. KV -461072	184260.000	359091.027	4615260.157	-21000.000	697.322	697.322	32.074823	0.000	0.348	5.00	0.00	697.322	697.130	697.130
CIRC. KV -461072	184280.000	359100.674	4615277.677	-21000.000	697.329	697.329	32.014192	0.000	0.305	5.00	0.00	697.329	697.132	697.132
CIRC. KV -461072	184300.000	359110.305	4615295.205	-21000.000	697.334	697.334	31.953562	0.000	0.261	5.00	0.00	697.334	697.140	697.140
CIRC. KV -461072	184320.000	359119.919	4615312.743	-21000.000	697.339	697.339	31.892932	0.000	0.218	5.00	0.00	697.339	697.156	697.156
CIRC. KV -461072	184340.000	359129.516	4615330.290	-21000.000	697.343	697.343	31.832301	0.000	0.175	5.00	0.00	697.343	697.157	697.157
CIRC. KV -461072	184360.000	359139.097	4615347.846	-21000.000	697.346	697.346	31.771671	0.000	0.131	5.00	0.00	697.346	697.155	697.155
CIRC. KV -461072	184380.000	359148.661	4615365.411	-21000.000	697.348	697.348	31.711040	0.000	0.088	5.00	0.00	697.348	697.166	697.166
CLOT. KV -461072	184395.355	359155.992	4615378.903	-21000.000	697.349	697.349	31.664491	0.000	0.055	5.00	0.00	697.349	697.177	697.177
CLOT. KV -461072	184400.000	359158.208	4615382.985	-23150.666	697.350	697.350	31.651064	0.000	0.044	4.54	0.00	697.350	697.179	697.179
CLOT. KV -461072	184420.000	359167.740	4615400.567	-41411.841	697.350	697.350	31.608192	0.000	0.001	2.54	0.00	697.350	697.220	697.220
CLOT. Horizontal	184440.000	359177.264	4615418.154	-196075.976	697.350	697.350	31.589572	0.000	0.000	0.54	0.00	697.350	697.256	697.256
RECTA Horizontal	184445.355	359179.813	4615422.863	0.000	697.350	697.350	31.588703	0.000	0.000	0.00	0.00	697.350	697.252	697.252

Istram 20.08.08.26 11/02/21 08:47:57 200009 pagina 12

PROYECTO : ESTUDIO INFORMATIVO DE LA INTEGRACION DEL FFCC EN VALLADOLID
GRUPO : 1 : EJES ANCHO 1435 ALTERNATIVA 2
EJE : 74 : VIA 1 UIC

* * * PUNTOS DEL EJE EN PLANTA * * *

TIPO	P.K.	X	Y	RADIO	Z RAS IZ.	Z RAS DR.	AZIMUT	DIST. EJE	PEN(o/oo)	PERAL_I	PERAL_D	HILO BAJO	ZT (eje)	Z TERR.
RECTA Horizontal	184460.000	359186.786	4615435.742	0.000	697.350	697.350	31.588703	0.000	0.000	0.00	0.00	697.350	697.242	697.242
RECTA Horizontal	184480.000	359196.307	4615453.330	0.000	697.350	697.350	31.588703	0.000	0.000	0.00	0.00	697.350	697.216	697.216
RECTA Horizontal	184500.000	359205.829	4615470.918	0.000	697.350	697.350	31.588703	0.000	0.000	0.00	0.00	697.350	697.189	697.189
RECTA Horizontal	184520.000	359215.351	4615488.506	0.000	697.350	697.350	31.588703	0.000	0.000	0.00	0.00	697.350	697.180	697.180
RECTA Horizontal	184540.000	359224.872	4615506.094	0.000	697.350	697.350	31.588703	0.000	0.000	0.00	0.00	697.350	697.190	697.190
RECTA Horizontal	184560.000	359234.394	4615523.682	0.000	697.350	697.350	31.588703	0.000	0.000	0.00	0.00	697.350	697.212	697.212
RECTA Horizontal	184580.000	359243.915	4615541.270	0.000	697.350	697.350	31.588703	0.000	0.000	0.00	0.00	697.350	697.211	697.211
RECTA Horizontal	184600.000	359253.437	4615558.858	0.000	697.350	697.350	31.588703	0.000	0.000	0.00	0.00	697.350	697.250	697.250
RECTA Horizontal	184620.000	359262.959	4615576.446	0.000	697.350	697.350	31.588703	0.000	0.000	0.00	0.00	697.350	697.244	697.244
RECTA Horizontal	184640.000	359272.480	4615594.034	0.000	697.350	697.350	31.588703	0.000	0.000	0.00	0.00	697.350	697.232	697.232
RECTA Horizontal	184660.000	359282.002	4615611.622	0.000	697.350	697.350	31.588703	0.000	0.000	0.00	0.00	697.350	697.229	697.229
RECTA KV 133924	184680.000	359291.524	4615629.210	0.000	697.350	697.350	31.588703	0.000	0.071	0.00	0.00	697.350	697.221	697.221
RECTA KV 133924	184700.000	359301.045	4615646.798	0.000	697.353	697.353	31.588703	0.000	0.220	0.00	0.00	697.353	697.245	697.245
RECTA KV 133924	184720.000	359310.567	4615664.386	0.000	697.359	697.359	31.588703	0.000	0.370	0.00	0.00	697.359	697.251	697.251
RECTA KV 133924	184740.000	359320.089	4615681.974	0.000	697.368	697.368	31.588703	0.000	0.519	0.00	0.00	697.368	697.279	697.279
RECTA KV 133924	184760.000	359329.610	4615699.562	0.000	697.380	697.380	31.588703	0.000	0.668	0.00	0.00	697.380	697.258	697.258
RECTA KV 133924	184780.000	359339.132	4615717.150	0.000	697.395	697.395	31.588703	0.000	0.818	0.00	0.00	697.395	697.248	697.248
RECTA KV 133924	184800.000	359348.654	4615734.738	0.000	697.413	697.413	31.588703	0.000	0.967	0.00	0.00	697.413	697.273	697.273
CLOT. KV 133924	184805.932	359351.477	4615739.955	-1000000.000	697.418	697.418	31.588703	0.000	1.011	0.00	0.00	697.418	697.280	697.280
CLOT. KV 133924	184820.000	359358.175	4615752.326	-1000000.000	697.433	697.433	31.588563	0.000	1.116	0.00	0.00	697.433	697.309	697.309
CIRC. KV 133924	184835.932	359365.760	4615766.337	-1500000.000	697.452	697.452	31.588066	0.000	1.235	0.00	0.00	697.452	697.329	697.329
CIRC. KV 133924	184840.000	359367.697	4615769.914	-1500000.000	697.457	697.457	31.587894	0.000	1.266	0.00	0.00	697.457	697.329	697.329
CIRC. Rampa	184860.000	359377.218	4615787.503	-1500000.000	697.484	697.484	31.587045	0.000	1.344	0.00	0.00	697.484	697.360	697.360
CIRC. Rampa	184880.000	359386.739	4615805.091	-1500000.000	697.511	697.511	31.586196	0.000	1.344	0.00	0.00	697.511	697.379	697.379
CIRC. Rampa	184900.000	359396.260	4615822.679	-1500000.000	697.537	697.537	31.585347	0.000	1.344	0.00	0.00	697.537	697.416	697.416
CIRC. Rampa	184920.000	359405.781	4615840.268	-1500000.000	697.564	697.564	31.584498	0.000	1.344	0.00	0.00	697.564	697.431	697.431
CIRC. Rampa	184940.000	359415.301	4615857.857	-1500000.000	697.591	697.591	31.583649	0.000	1.344	0.00	0.00	697.591	697.458	697.458
CIRC. Rampa	184960.000	359424.821	4615875.446	-1500000.000	697.618	697.618	31.582801	0.000	1.344	0.00	0.00	697.618	697.470	697.470
CLOT. Rampa	184967.456	359428.370	4615882.003	-1000000.000	697.628	697.628	31.582484	0.000	1.344	0.00	0.00	697.628	697.478	697.478
CLOT. Rampa	184980.000	359434.341	4615893.035	-1000000.000	697.645	697.645	31.582063	0.000	1.344	0.00	0.00	697.645	697.493	697.493
RECTA Rampa	184997.456	359442.650	4615908.387	0.000	697.668	697.668	31.581848	0.000	1.344	0.00	0.00	697.668	697.504	697.504
RECTA Rampa	185000.000	359443.861	4615910.624	0.000	697.672	697.672	31.581848	0.000	1.344	0.00	0.00	697.672	697.504	697.504
RECTA Rampa	185020.000	359453.380	4615928.213	0.000	697.699	697.699	31.581848	0.000	1.344	0.00	0.00	697.699	697.508	697.508
RECTA Rampa	185040.000	359462.900	4615945.802	0.000	697.726	697.726	31.581848	0.000	1.344	0.00	0.00	697.726	697.540	697.540
RECTA Rampa	185060.000	359472.420	4615963.391	0.000	697.753	697.753	31.581848	0.000	1.344	0.00	0.00	697.753	697.546	697.546
RECTA Rampa	185080.000	359481.940	4615980.980	0.000	697.779	697.779	31.581848	0.000	1.344	0.00	0.00	697.779	697.548	697.548
RECTA Rampa	185100.000	359491.459	4615998.569	0.000	697.806	697.806	31.581848	0.000	1.344	0.00	0.00	697.806	697.584	697.584
RECTA KV -127500	185120.000	359500.979	4616016.158	0.000	697.833	697.833	31.581848	0.000	1.262	0.00	0.00	697.833	697.611	697.611
RECTA KV -127500	185140.000	359510.499	4616033.747	0.000	697.856	697.856	31.581848	0.000	1.105	0.00	0.00	697.856	697.632	697.632
RECTA KV -127500	185160.000	359520.019	4616051.336	0.000	697.877	697.877	31.581848	0.000	0.948	0.00	0.00	697.877	697.670	697.670
RECTA KV -127500	185180.000	359529.538	4616068.925	0.000	697.894	697.894	31.581848	0.000	0.791	0.00	0.00	697.894	697.706	697.706
RECTA KV -127500	185200.000	359539.058	4616086.514	0.000	697.909	697.909	31.581848	0.000	0.634	0.00	0.00	697.909	697.682	697.682
RECTA KV -127500	185220.000	359548.578	4616104.103	0.000	697.920	697.920	31.581848	0.000	0.477	0.00	0.00	697.920	697.689	697.689
RECTA KV -127500	185240.000	359558.098	4616121.692	0.000	697.928	697.928	31.581848	0.000	0.320	0.00	0.00	697.928	697.720	697.720
RECTA KV -127500	185260.000	359567.617	4616139.281	0.000	697.932	697.932	31.581848	0.000	0.163	0.00	0.00	697.932	697.736	697.736
RECTA KV -127500	185280.000	359577.137	4616156.870	0.000	697.934	697.934	31.581848	0.000	0.007	0.00	0.00	697.934	697.765	697.765
RECTA Pendiente	185300.000	359586.657	4616174.459	0.000	697.933	697.933	31.581848	0.000	-0.068	0.00	0.00	697.933	697.806	697.806
RECTA Pendiente	185320.000	359596.177	4616192.048	0.000	697.932	697.932	31.581848	0.000	-0.068	0.00	0.00	697.932	697.807	697.807
RECTA Pendiente	185340.000	359605.696	4616209.637	0.000	697.930	697.930	31.581848	0.000	-0.068	0.00	0.00	697.930	697.815	697.815
RECTA Pendiente	185360.000	359615.216	4616227.226	0.000	697.929	697.929	31.581848	0.000	-0.068	0.00	0.00	697.929	697.826	697.826

Istram 20.08.08.26 11/02/21 08:47:57 200009 pagina 13

PROYECTO : ESTUDIO INFORMATIVO DE LA INTEGRACION DEL FFCC EN VALLADOLID
GRUPO : 1 : EJES ANCHO 1435 ALTERNATIVA 2
EJE : 74 : VIA 1 UIC

* * * PUNTOS DEL EJE EN PLANTA * * *

TIPO	P.K.	X	Y	RADIO	Z RAS IZ.	Z RAS DR.	AZIMUT	DIST. EJE	PEN(o/oo)	PERAL_I	PERAL_D	HILO BAJO	ZT (eje)	Z TERR.
RECTA Pendiente	185380.000	359624.736	4616244.815	0.000	697.928	697.928	31.581848	0.000	-0.068	0.00	0.00	697.928	697.815	697.815
RECTA Pendiente	185400.000	359634.256	4616262.404	0.000	697.926	697.926	31.581848	0.000	-0.068	0.00	0.00	697.926	697.815	697.815
RECTA Pendiente	185420.000	359643.775	4616279.993	0.000	697.925	697.925	31.581848	0.000	-0.068	0.00	0.00	697.925	697.801	697.801
RECTA Pendiente	185440.000	359653.295	4616297.582	0.000	697.924	697.924	31.581848	0.000	-0.068	0.00	0.00	697.924	697.819	697.819
RECTA Pendiente	185460.000	359662.815	4616315.172	0.000	697.922	697.922	31.581848	0.000	-0.068	0.00	0.00	697.922	697.825	697.825
RECTA Pendiente	185480.000	359672.335	4616332.761	0.000	697.921	697.921	31.581848	0.000	-0.068	0.00	0.00	697.921	697.833	697.833
RECTA Pendiente	185500.000	359681.854	4616350.350	0.000	697.920	697.920	31.581848	0.000	-0.068	0.00	0.00	697.920	697.909	697.909
RECTA Pendiente	185520.000	359691.374	4616367.939	0.000	697.918	697.918	31.581848	0.000	-0.068	0.00	0.00	697.918	697.766	697.766
RECTA Pendiente	185540.000	359700.894	4616385.528	0.000	697.917	697.917	31.581848	0.000	-0.068	0.00	0.00	697.917	697.784	697.784
RECTA Pendiente	185560.000	359710.414	4616403.117	0.000	697.916	697.916	31.581848	0.000	-0.068	0.00	0.00	697.916	697.807	697.807
RECTA Pendiente	185580.000	359719.933	4616420.706	0.000	697.914	697.914	31.581848	0.000	-0.068	0.00	0.00	697.914	697.835	697.835
RECTA Pendiente	185600.000	359729.453	4616438.295	0.000	697.913	697.913	31.581848	0.000	-0.068	0.00	0.00	697.913	697.879	697.879
RECTA Pendiente	185620.000	359738.973	4616455.884	0.000	697.912	697.912	31.581848	0.000	-0.068	0.00	0.00	697.912	697.855	697.855
RECTA Pendiente	185640.000	359748.493	4616473.473	0.000	697.910	697.910	31.581848	0.000	-0.068	0.00	0.00	697.910	697.804	697.804
RECTA Pendiente	185660.000	359758.012	4616491.062	0.000	697.909	697.909	31.581848	0.000	-0.068	0.00	0.00	697.909	697.759	697.759
RECTA Pendiente	185680.000	359767.532	4616508.651	0.000	697.907	697.907	31.581848	0.000	-0.068	0.00	0.00	697.907	697.732	697.732
RECTA Pendiente	185700.000	359777.052	4616526.240	0.000	697.906	697.906	31.581848	0.000	-0.068	0.00	0.00	697.906	697.753	697.753
RECTA KV 2053220	185720.000	359786.572	4616543.829	0.000	697.905	697.905	31.581848	0.000	-0.058	0.00	0.00	697.905	697.749	697.749
RECTA KV 2053220	185740.000	359796.091	4616561.418	0.000	697.904	697.904	31.581848	0.000	-0.048	0.00	0.00	697.904	697.744	697.744
RECTA KV 2053220	185760.000	359805.611	4616579.007	0.000	697.903	697.903	31.581848	0.000	-0.039	0.00	0.00	697.903	697.764	697.764
RECTA KV 2053220	185780.000	359815.131	4616596.596	0.000	697.902	697.902	31.581848	0.000	-0.029	0.00	0.00	697.902	702.146	702.146
RECTA KV 2053220	185800.000	359824.651	4616614.185	0.000	697.902	697.902	31.581848	0.000	-0.019	0.00	0.00	697.902	697.720	697.720
RECTA KV 2053220	185820.000	359834.170	4616631.774	0.000	697.901	697.901	31.581848	0.000	-0.009	0.00	0.00	697.901	697.698	697.698
RECTA KV 2053220	185840.000	359843.690	4616649.363	0.000	697.901	697.901	31.581848	0.000	0.000	0.00	0.00	697.901	697.728	697.728
RECTA KV 2053220	185860.000	359853.210	4616666.952	0.000	697.901	697.901	31.581848	0.000	0.010	0.00	0.00	697.901	697.747	697.747
RECTA KV 2053220	185880.000	359862.730	4616684.541	0.000	697.902	697.902	31.581848	0.000	0.020	0.00	0.00	697.902	697.748	697.748
RECTA Rampa	185900.000	359872.249	4616702.130	0.000	697.902	697.902	31.581848	0.000	0.020	0.00	0.00	697.902	697.747	697.747
RECTA Rampa	185920.000	359881.769	4616719.719	0.000	697.903	697.903	31.581848	0.000	0.020	0.00	0.00	697.903	697.763	697.763
RECTA Rampa	185940.000	359891.289	4616737.309	0.000	697.903	697.903	31.581848	0.000	0.020	0.00	0.00	697.903	697.788	697.788
RECTA Rampa	185960.000	359900.809	4616754.898	0.000	697.903	697.903	31.581848	0.000	0.020	0.00	0.00	697.903	697.802	697.802
RECTA Rampa	185980.000	359910.328	4616772.487	0.000	697.904	697.904	31.581848	0.000	0.020	0.00	0.00	697.904	697.795	697.795
RECTA Rampa	186000.000	359919.848	4616790.076	0.000	697.904	697.904	31.581848	0.000	0.020	0.00	0.00	697.904	697.795	697.795
RECTA Rampa	186020.000	359929.368	4616807.665	0.000	697.905	697.905	31.581848	0.000	0.020	0.00	0.00	697.905	697.828	697.828
RECTA Rampa	186040.000	359938.888	4616825.254	0.000	697.905	697.905	31.581848	0.000	0.020	0.00	0.00	697.905	697.844	697.844
RECTA Rampa	186060.000	359948.407	4616842.843	0.000	697.905	697.905	31.581848	0.000	0.020	0.00	0.00	697.905	697.848	697.848
RECTA Rampa	186080.000	359957.927	4616860.432	0.000	697.906	697.906	31.581848	0.000	0.020	0.00	0.00	697.906	697.836	697.836
RECTA Rampa	186100.000	359967.447	4616878.021	0.000	697.906	697.906	31.581848	0.000	0.020	0.00	0.00	697.906	697.836	697.836
RECTA Rampa	186120.000	359976.967	4616895.610	0.000	697.907	697.907	31.581848	0.000	0.020	0.00	0.00	697.907	697.832	697.832
RECTA Rampa	186140.000	359986.486	4616913.199	0.000	697.907	697.907	31.581848	0.000	0.020	0.00	0.00	697.907	697.821	697.821
RECTA Rampa	186160.000	359996.006	4616930.788	0.000	697.907	697.907	31.581848	0.000	0.020	0.00	0.00	697.907	697.820	697.820
CIRC. Rampa	186175.899	360003.574	4616944.770	600000.000	697.908	697.908	31.581848	0.000	0.020	0.00	0.00	697.908	697.820	697.820
CIRC. Rampa	186180.000	360005.526	4616948.377	600000.000	697.908	697.908	31.582283	0.000	0.020	0.00	0.00	697.908	697.820	697.820
CIRC. Rampa	186200.000	360015.046	4616965.966	600000.000	697.908	697.908	31.584405	0.000	0.020	0.00	0.00	697.908	697.764	697.764
CIRC. Rampa	186220.000	360024.567	4616983.554	600000.000	697.909	697.909	31.586527	0.000	0.020	0.00	0.00	697.909	697.749	697.749
CIRC. Rampa	186240.000	360034.088	4617001.143	600000.000	697.909	697.909	31.588649	0.000	0.020	0.00	0.00	697.909	697.702	697.702
CIRC. Rampa	186260.000	360043.610	4617018.730	600000.000	697.909	697.909	31.590771	0.000	0.020	0.00	0.00	697.909	697.729	697.729
CIRC. Rampa	186280.000	360053.133	4617036.318	600000.000	697.910	697.910	31.592893	0.000	0.020	0.00	0.00	697.910	697.729	697.729
RECTA Rampa	186296.020	360060.761	4617050.405	0.000	697.910	697.910	31.594593	0.000	0.020	0.00	0.00	697.910	697.743	697.743
RECTA Rampa	186300.000	360062.656	4617053.905	0.000	697.910	697.910	31.594593	0.000	0.020	0.00	0.00	697.910	697.749	697.749
RECTA Rampa	186320.000	360072.179	4617071.492	0.000	697.911	697.911	31.594593	0.000	0.020	0.00	0.00	697.911	697.721	697.721

Istram 20.08.08.26 11/02/21 08:47:57 200009 pagina 14

PROYECTO : ESTUDIO INFORMATIVO DE LA INTEGRACION DEL FFCC EN VALLADOLID
GRUPO : 1 : EJES ANCHO 1435 ALTERNATIVA 2
EJE : 74 : VIA 1 UIC

* * * PUNTOS DEL EJE EN PLANTA * * *

TIPO	P.K.	X	Y	RADIO	Z RAS IZ.	Z RAS DR.	AZIMUT	DIST. EJE	PEN(o/oo)	PERAL_I	PERAL_D	HILO BAJO	ZT (eje)	Z TERR.
RECTA Rampa	186340.000	360081.702	4617089.079	0.000	697.911	697.911	31.594593	0.000	0.020	0.00	0.00	697.911	697.720	697.720
RECTA Rampa	186360.000	360091.225	4617106.667	0.000	697.911	697.911	31.594593	0.000	0.020	0.00	0.00	697.911	697.708	697.708
RECTA Rampa	186380.000	360100.749	4617124.254	0.000	697.912	697.912	31.594593	0.000	0.020	0.00	0.00	697.912	697.736	697.736
RECTA Rampa	186400.000	360110.272	4617141.841	0.000	697.912	697.912	31.594593	0.000	0.020	0.00	0.00	697.912	697.764	697.764
RECTA Rampa	186420.000	360119.795	4617159.428	0.000	697.913	697.913	31.594593	0.000	0.020	0.00	0.00	697.913	697.789	697.789
RECTA Rampa	186440.000	360129.319	4617177.015	0.000	697.913	697.913	31.594593	0.000	0.020	0.00	0.00	697.913	697.774	697.774
RECTA Rampa	186460.000	360138.842	4617194.602	0.000	697.913	697.913	31.594593	0.000	0.020	0.00	0.00	697.913	697.765	697.765
RECTA Rampa	186480.000	360148.365	4617212.189	0.000	697.914	697.914	31.594593	0.000	0.020	0.00	0.00	697.914	697.765	697.765
RECTA Rampa	186500.000	360157.888	4617229.777	0.000	697.914	697.914	31.594593	0.000	0.020	0.00	0.00	697.914	697.758	697.758
RECTA Rampa	186520.000	360167.412	4617247.364	0.000	697.915	697.915	31.594593	0.000	0.020	0.00	0.00	697.915	697.750	697.750
RECTA Rampa	186540.000	360176.935	4617264.951	0.000	697.915	697.915	31.594593	0.000	0.020	0.00	0.00	697.915	697.686	697.686
RECTA Rampa	186560.000	360186.458	4617282.538	0.000	697.915	697.915	31.594593	0.000	0.020	0.00	0.00	697.915	697.738	697.738
RECTA Rampa	186580.000	360195.981	4617300.125	0.000	697.916	697.916	31.594593	0.000	0.020	0.00	0.00	697.916	697.703	697.703
RECTA Rampa	186600.000	360205.505	4617317.712	0.000	697.916	697.916	31.594593	0.000	0.020	0.00	0.00	697.916	697.720	697.720
RECTA Rampa	186620.000	360215.028	4617335.299	0.000	697.917	697.917	31.594593	0.000	0.020	0.00	0.00	697.917	697.779	697.779
RECTA Rampa	186640.000	360224.551	4617352.886	0.000	697.917	697.917	31.594593	0.000	0.020	0.00	0.00	697.917	697.794	697.794
RECTA Rampa	186660.000	360234.075	4617370.474	0.000	697.917	697.917	31.594593	0.000	0.020	0.00	0.00	697.917	697.753	697.753
RECTA Rampa	186680.000	360243.598	4617388.061	0.000	697.918	697.918	31.594593	0.000	0.020	0.00	0.00	697.918	697.787	697.787
RECTA Rampa	186700.000	360253.121	4617405.648	0.000	697.918	697.918	31.594593	0.000	0.020	0.00	0.00	697.918	697.828	697.828
RECTA Rampa	186720.000	360262.644	4617423.235	0.000	697.919	697.919	31.594593	0.000	0.020	0.00	0.00	697.919	697.870	697.870
RECTA Rampa	186740.000	360272.168	4617440.822	0.000	697.919	697.919	31.594593	0.000	0.020	0.00	0.00	697.919	697.837	697.837
RECTA Rampa	186760.000	360281.691	4617458.409	0.000	697.919	697.919	31.594593	0.000	0.020	0.00	0.00	697.919	697.801	697.801
RECTA Rampa	186780.000	360291.214	4617475.996	0.000	697.920	697.920	31.594593	0.000	0.020	0.00	0.00	697.920	697.801	697.801
RECTA Rampa	186800.000	360300.737	4617493.584	0.000	697.920	697.920	31.594593	0.000	0.020	0.00	0.00	697.920	697.774	697.774
RECTA Rampa	186820.000	360310.261	4617511.171	0.000	697.921	697.921	31.594593	0.000	0.020	0.00	0.00	697.921	697.774	697.774
RECTA Rampa	186840.000	360319.784	4617528.758	0.000	697.921	697.921	31.594593	0.000	0.020	0.00	0.00	697.921	697.787	697.787
RECTA Rampa	186860.000	360329.307	4617546.345	0.000	697.921	697.921	31.594593	0.000	0.020	0.00	0.00	697.921	697.788	697.788
RECTA Rampa	186880.000	360338.830	4617563.932	0.000	697.922	697.922	31.594593	0.000	0.020	0.00	0.00	697.922	697.810	697.810
RECTA Rampa	186900.000	360348.354	4617581.519	0.000	697.922	697.922	31.594593	0.000	0.020	0.00	0.00	697.922	697.810	697.810
RECTA Rampa	186920.000	360357.877	4617599.106	0.000	697.923	697.923	31.594593	0.000	0.020	0.00	0.00	697.923	697.810	697.810
RECTA Rampa	186940.000	360367.400	4617616.693	0.000	697.923	697.923	31.594593	0.000	0.020	0.00	0.00	697.923	697.772	697.772
RECTA Rampa	186960.000	360376.924	4617634.281	0.000	697.923	697.923	31.594593	0.000	0.020	0.00	0.00	697.923	697.788	697.788
RECTA Rampa	186980.000	360386.447	4617651.868	0.000	697.924	697.924	31.594593	0.000	0.020	0.00	0.00	697.924	697.788	697.788
RECTA Rampa	187000.000	360395.970	4617669.455	0.000	697.924	697.924	31.594593	0.000	0.020	0.00	0.00	697.924	697.799	697.799
RECTA Rampa	187020.000	360405.493	4617687.042	0.000	697.925	697.925	31.594593	0.000	0.020	0.00	0.00	697.925	697.727	697.727
RECTA Rampa	187040.000	360415.017	4617704.629	0.000	697.925	697.925	31.594593	0.000	0.020	0.00	0.00	697.925	697.705	697.705
RECTA Rampa	187060.000	360424.540	4617722.216	0.000	697.925	697.925	31.594593	0.000	0.020	0.00	0.00	697.925	697.721	697.721
RECTA Rampa	187080.000	360434.063	4617739.803	0.000	697.926	697.926	31.594593	0.000	0.020	0.00	0.00	697.926	697.746	697.746
RECTA Rampa	187100.000	360443.586	4617757.391	0.000	697.926	697.926	31.594593	0.000	0.020	0.00	0.00	697.926	697.702	697.702
RECTA KV 61848689	187120.000	360453.110	4617774.978	0.000	697.927	697.927	31.594593	0.000	0.020	0.00	0.00	697.927	697.706	697.706
RECTA KV 61848689	187140.000	360462.633	4617792.565	0.000	697.927	697.927	31.594593	0.000	0.021	0.00	0.00	697.927	697.711	697.711
RECTA KV 61848689	187160.000	360472.156	4617810.152	0.000	697.927	697.927	31.594593	0.000	0.021	0.00	0.00	697.927	697.722	697.722
RECTA KV 61848689	187180.000	360481.680	4617827.739	0.000	697.928	697.928	31.594593	0.000	0.021	0.00	0.00	697.928	697.733	697.733
RECTA KV 61848689	187200.000	360491.203	4617845.326	0.000	697.928	697.928	31.594593	0.000	0.022	0.00	0.00	697.928	697.744	697.744
RECTA KV 61848689	187220.000	360500.726	4617862.913	0.000	697.929	697.929	31.594593	0.000	0.022	0.00	0.00	697.929	697.680	697.680
RECTA KV 61848689	187240.000	360510.249	4617880.501	0.000	697.929	697.929	31.594593	0.000	0.022	0.00	0.00	697.929	697.676	697.676
RECTA KV 61848689	187260.000	360519.773	4617898.088	0.000	697.930	697.930	31.594593	0.000	0.023	0.00	0.00	697.930	697.669	697.669
RECTA KV 61848689	187280.000	360529.296	4617915.675	0.000	697.930	697.930	31.594593	0.000	0.023	0.00	0.00	697.930	697.662	697.662
RECTA Rampa	187300.000	360538.819	4617933.262	0.000	697.931	697.931	31.594593	0.000	0.023	0.00	0.00	697.931	697.664	697.664
RECTA Rampa	187320.000	360548.342	4617950.849	0.000	697.931	697.931	31.594593	0.000	0.023	0.00	0.00	697.931	697.671	697.671

Istram 20.08.08.26 11/02/21 08:47:57 200009 pagina 15

PROYECTO : ESTUDIO INFORMATIVO DE LA INTEGRACION DEL FFCC EN VALLADOLID
GRUPO : 1 : EJES ANCHO 1435 ALTERNATIVA 2
EJE : 74 : VIA 1 UIC

* * * PUNTOS DEL EJE EN PLANTA * * *

TIPO	P.K.	X	Y	RADIO	Z RAS IZ.	Z RAS DR.	AZIMUT	DIST. EJE	PEN(o/oo)	PERAL_I	PERAL_D	HILO BAJO	ZT (eje)	Z TERR.
RECTA Rampa	187340.000	360557.866	4617968.436	0.000	697.931	697.931	31.594593	0.000	0.023	0.00	0.00	697.931	697.677	697.677
RECTA Rampa	187360.000	360567.389	4617986.023	0.000	697.932	697.932	31.594593	0.000	0.023	0.00	0.00	697.932	697.700	697.700
RECTA Rampa	187380.000	360576.912	4618003.610	0.000	697.932	697.932	31.594593	0.000	0.023	0.00	0.00	697.932	697.706	697.706
RECTA Rampa	187400.000	360586.436	4618021.198	0.000	697.933	697.933	31.594593	0.000	0.023	0.00	0.00	697.933	697.706	697.706
RECTA Rampa	187420.000	360595.959	4618038.785	0.000	697.933	697.933	31.594593	0.000	0.023	0.00	0.00	697.933	697.714	697.714
RECTA Rampa	187440.000	360605.482	4618056.372	0.000	697.934	697.934	31.594593	0.000	0.023	0.00	0.00	697.934	697.688	697.688
RECTA Rampa	187460.000	360615.005	4618073.959	0.000	697.934	697.934	31.594593	0.000	0.023	0.00	0.00	697.934	697.661	697.661
RECTA Rampa	187480.000	360624.529	4618091.546	0.000	697.935	697.935	31.594593	0.000	0.023	0.00	0.00	697.935	697.610	697.610
RECTA Rampa	187500.000	360634.052	4618109.133	0.000	697.935	697.935	31.594593	0.000	0.023	0.00	0.00	697.935	697.590	697.590
RECTA Rampa	187520.000	360643.575	4618126.720	0.000	697.936	697.936	31.594593	0.000	0.023	0.00	0.00	697.936	697.611	697.611
RECTA Rampa	187540.000	360653.098	4618144.308	0.000	697.936	697.936	31.594593	0.000	0.023	0.00	0.00	697.936	697.584	697.584
CLOT. Rampa	187545.748	360655.835	4618149.362	1000000.000	697.936	697.936	31.594593	0.000	0.023	0.00	0.00	697.936	697.577	697.577
CLOT. Rampa	187560.000	360662.622	4618161.894	45242.279	697.936	697.936	31.604620	0.000	0.023	3.48	0.00	697.936	697.557	697.557
CLOT. Rampa	187580.000	360672.154	4618179.477	18824.867	697.937	697.937	31.652509	0.000	0.023	8.35	0.00	697.937	697.531	697.531
CLOT. Rampa	187600.000	360681.704	4618197.049	11885.062	697.937	697.937	31.739892	0.000	0.023	13.23	0.00	697.937	697.504	697.504
CLOT. KV 10573	187620.000	360691.284	4618214.606	8683.779	697.957	697.957	31.866768	0.000	1.904	18.11	0.00	697.957	697.477	697.477
CLOT. KV 10573	187640.000	360700.905	4618232.140	6841.104	698.014	698.014	32.033138	0.000	3.795	22.99	0.00	698.014	697.450	697.450
CLOT. KV 10573	187660.000	360710.576	4618249.646	5643.556	698.108	698.108	32.239000	0.000	5.687	27.87	0.00	698.108	697.470	697.470
CLOT. KV 10573	187680.000	360720.310	4618267.117	4802.814	698.241	698.241	32.484356	0.000	7.579	32.74	0.00	698.241	697.516	697.516
CLOT. KV 10573	187700.000	360730.116	4618284.548	4180.091	698.411	698.411	32.769206	0.000	9.470	37.62	0.00	698.411	697.558	697.558
CLOT. KV 10573	187720.000	360740.006	4618301.932	3700.315	698.620	698.620	33.093549	0.000	11.362	42.50	0.00	698.620	697.578	697.578
CLOT. KV 10573	187740.000	360749.989	4618319.262	3319.334	698.866	698.866	33.457385	0.000	13.254	47.38	0.00	698.866	697.498	697.498
CIRC. KV 10573	187750.748	360755.397	4618328.551	3145.300	699.014	699.014	33.669230	0.000	14.270	50.00	0.00	699.014	697.405	697.405
RECTA KV 10573	187755.982	360758.041	4618333.068	0.000	699.090	699.090	33.775168	0.000	14.765	50.00	0.00	699.090	697.356	697.356
CIRC. KV 10573	187755.982	360758.041	4618333.068	3145.300	699.090	699.090	33.775163	0.000	14.765	50.00	0.00	699.090	697.356	697.356

Istram 20.08.08.26 11/02/21 08:52:05 200009 pagina 1

PROYECTO : ESTUDIO INFORMATIVO DE LA INTEGRACION DEL FFCC EN VALLADOLID
GRUPO : 10 : EJES ANCHO MIXTO ALTERNATIVA 2
EJE : 80 : RAMAL MIXTO

* * * PUNTOS DEL EJE EN PLANTA * * *

TIPO	P.K.	X	Y	RADIO	Z RAS IZ.	Z RAS DR.	AZIMUT	DIST. EJE	PEN(o/oo)	PERAL_I	PERAL_D	HILO BAJO	ZT (eje)	Z TERR.
RECTA Rampa	0.000	360342.445	4617546.122	0.000	697.922	697.922	37.152392	0.000	0.023	0.00	0.00	697.922	696.656	696.656
CLOT. Rampa	12.537	360349.353	4617556.584	1000000.000	697.922	697.922	37.152392	0.000	0.023	0.00	0.00	697.922	696.570	696.570
CLOT. Rampa	20.000	360353.474	4617562.806	881.673	697.922	697.922	37.421838	0.000	0.023	6.04	0.00	697.922	696.500	696.500
CLOT. Rampa	40.000	360364.919	4617579.205	239.598	697.923	697.923	40.800924	0.000	0.023	22.22	0.00	697.923	696.500	696.500
CIRC. Rampa	43.429	360366.990	4617581.939	213.000	697.923	697.923	41.769044	0.000	0.023	25.00	0.00	697.923	696.500	696.500
CIRC. Rampa	60.000	360377.599	4617594.663	213.000	697.923	697.923	46.721680	0.000	0.023	25.00	0.00	697.923	696.880	696.880
CIRC. Rampa	63.044	360379.653	4617596.908	213.000	697.923	697.923	47.631478	0.000	0.023	25.00	0.00	697.923	696.888	696.888